# Drawings For
# Supply, Install, Testing and Commissioning
# of 180kW Grid-tied ground mounted Solar Power Project
# at Rubessa under Wangdue district, Bhutan

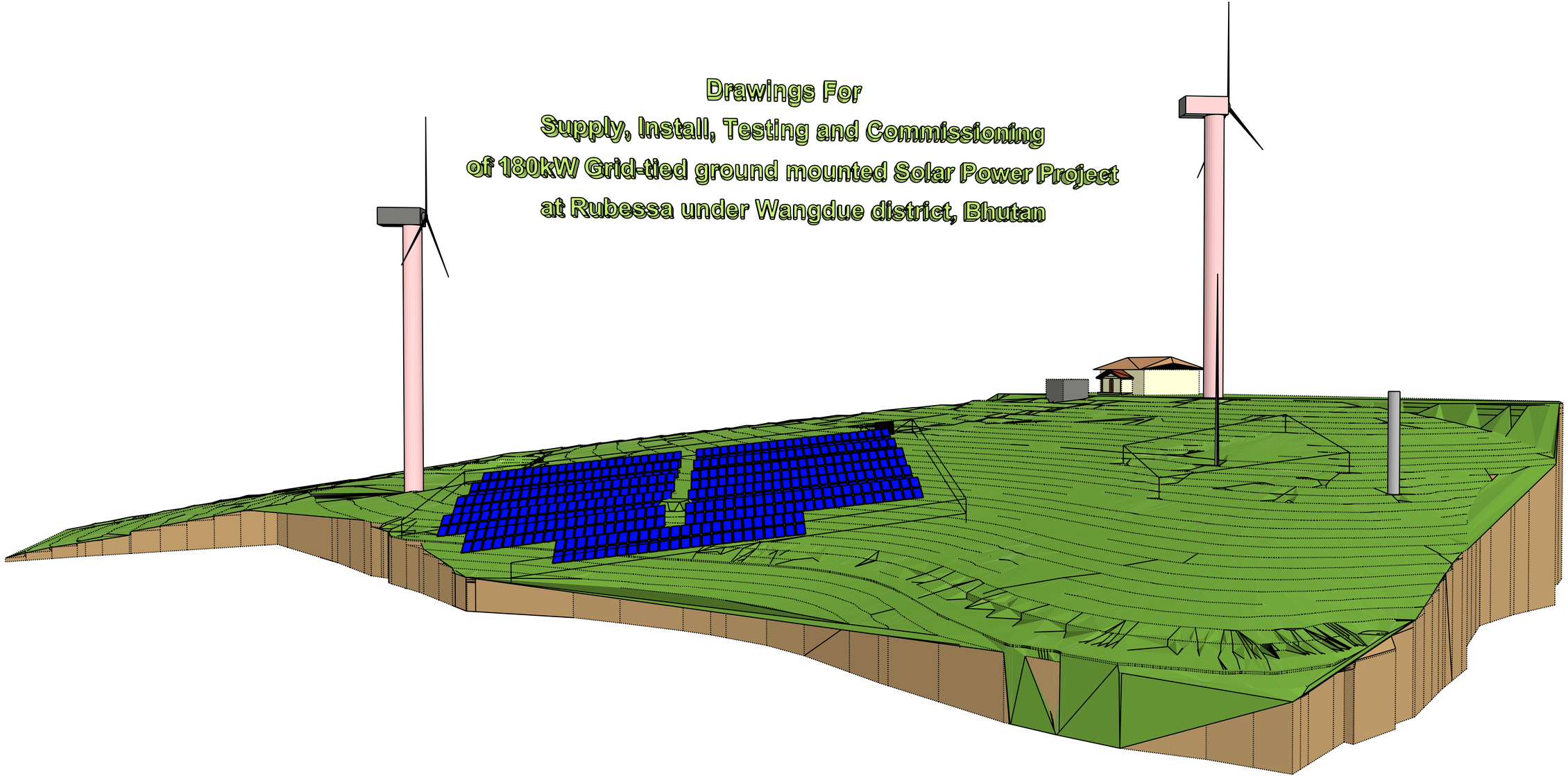

# CIVIL DRAWINGS

| | | | | | | | |
|---|---|---|---|---|---|---|---|
| **BHUTAN POWER CORPORATION LIMITED**<br>DISTRIBUTION SERVICES<br>DISTRIBUTION CONSTRUCTION DEPARTMENT<br>RENEWABLE ENERGY DIVISION | PROJECT TITLE | REFERENCE NOTES | APPROVED BY | DESIGNED BY | DRAWING TITLE | | DRAWING NO. |
| | **Supply, Install, Testing and Commissioning of 180kW Grid-tied ground mounted Solar Power Project at Rubessa under Wangdue district, Bhutan** | 1. ALL MEASUREMENTS IN THE DRAWING ARE IN mm UNLESS AND OTHERWISE MENTIONED | Engineering & Research Department | Renewal Energy Division | REFER DRAWING | | |
| | | 2. THE MEASUREMENTS IN THE DRAWING ARE TO BE READ AND NOT MEASURED | Kushal Chhetri<br>Senior Manager | Kinley Peldon<br>Civil Engineer | SCALE | DATE | |
| | DRAWING STATUS: APPROVAL ☐ APPROVED ☐ | 3. ANY DISCREPANCY IN THE DRAWING SHALL BE IMMEDIATELY BROUGHT TO THE NOTICE OF THE DESIGNER | | | REF DWG | September, 2020 | |

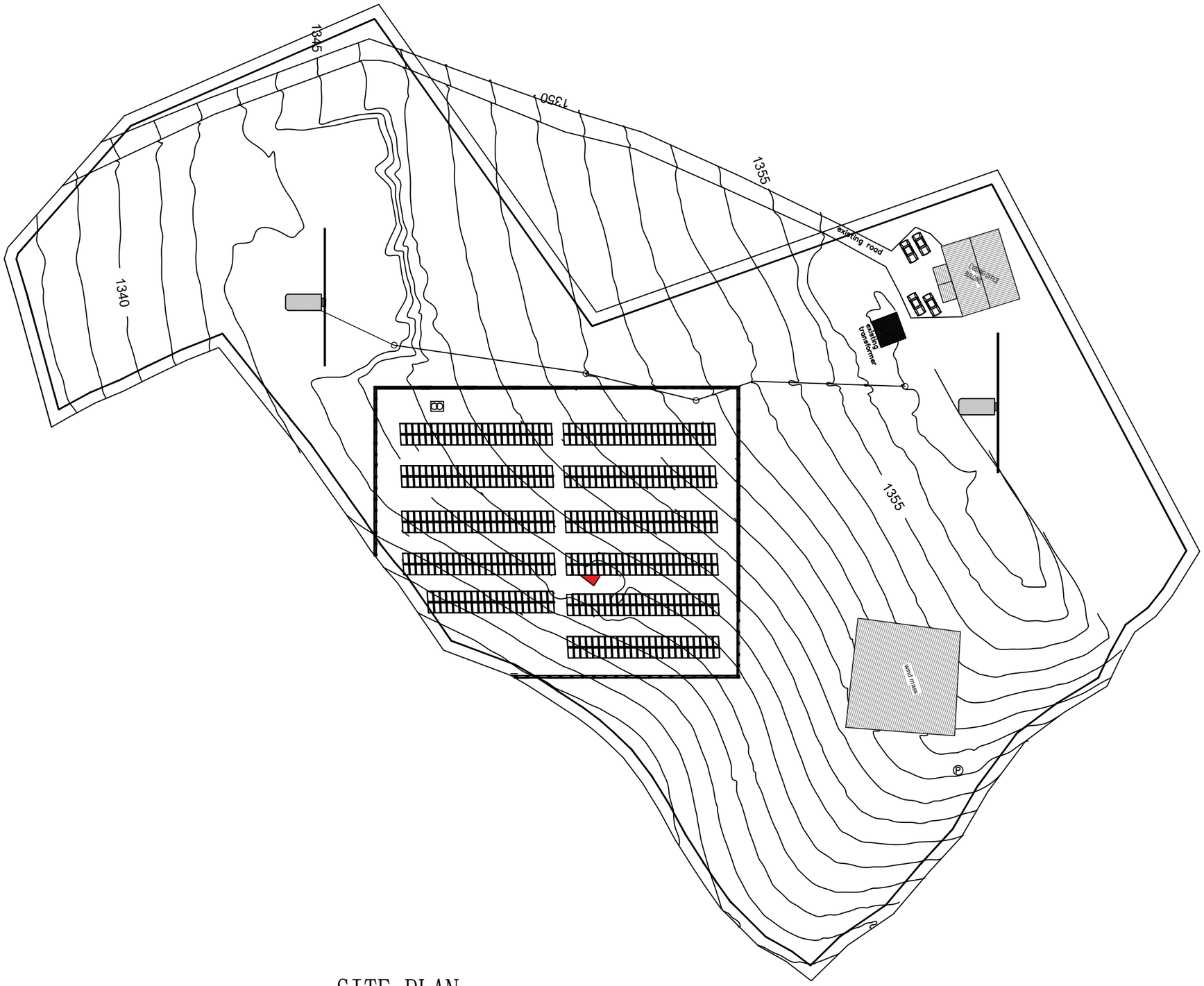


## LEGEND

- BPC BOUNDARY
- 2M SET BACK
- ELECTRIC POLE
- WIND TURBINE
- TRANSFORMER
- EXISTING DUMPING PIT
- EXISTING UG CABLE & MANHOLES
- PROPOSED PV SOLAR PANEL STRUCTURE (522 Nos.)
- PROPOSED CHAIN-LINK FENCING

BPC SITE AREA: 16187.4257SQ.M/4ACRES
PROPOSED PROJECT SITE AREA: 3150 SQ.M/0.78ACRE

# SITE PLAN

**BHUTAN POWER CORPORATION LIMITED**
**DISTRIBUTION SERVICES**
**DISTRIBUTION CONSTRUCTION DEPARTMENT**
**RENEWABLE ENERGY DIVISION**

| PROJECT TITLE | REFERENCE NOTES | APPROVED BY | DESIGNED BY | DRAWING TITLE | DRAWING NO. |
|---|---|---|---|---|---|
| **Supply, Install, Testing and Commissioning of 180kW Grid-tied ground mounted Solar Power Project at Rubessa under Wangdue district, Bhutan** | 1. ALL MEASUREMENTS IN THE DRAWING ARE IN mm UNLESS AND OTHERWISE MENTIONED | Engineering & Research Department | Renewal Energy Division | REFER DRAWING | |
| | 2. THE MEASUREMENTS IN THE DRAWING ARE TO BE READ AND NOT MEASURED | Kushal Chhetri<br>Senior Manager | Kinley Peldon<br>Civil Engineer | SCALE / DATE | **DWG # 1/13** |
| DRAWING STATUS: APPROVAL ☐ APPROVED ☐ | 3. ANY DISCREPANCY IN THE DRAWING SHALL BE IMMEDIATELY BROUGHT TO THE NOTICE OF THE DESIGNER | | | REF DWG / September, 2020 | |

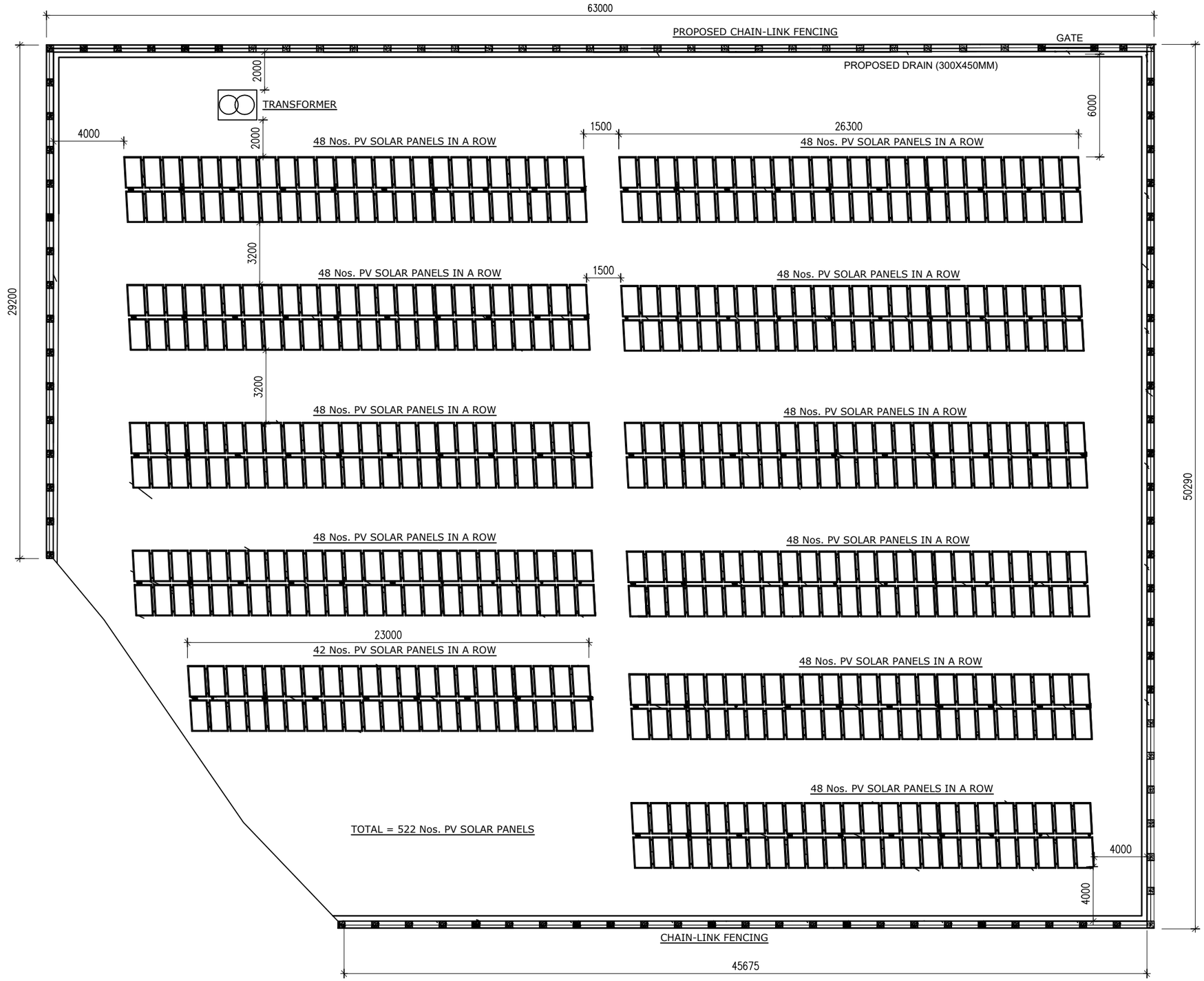


PLAN (180KW SOLAR POWER PROJECT)

| | | | | | | |
|---|---|---|---|---|---|---|
| **BHUTAN POWER CORPORATION LIMITED**<br>DISTRIBUTION SERVICES<br>DISTRIBUTION CONSTRUCTION DEPARTMENT<br>RENEWABLE ENERGY DIVISION | PROJECT TITLE | REFERENCE NOTES | APPROVED BY | DESIGNED BY | DRAWING TITLE | DRAWING NO. |
| | **Supply, Install, Testing and Commissioning of 180kW Grid-tied ground mounted Solar Power Project at Rubessa under Wangdue district, Bhutan** | 1. ALL MEASUREMENTS IN THE DRAWING ARE IN mm UNLESS AND OTHERWISE MENTIONED | Engineering & Research Department | Renewal Energy Division | REFER DRAWING | |
| | | 2. THE MEASUREMENTS IN THE DRAWING ARE TO BE READ AND NOT MEASURED | Kushal Chhetri<br>Senior Manager | Kinley Peldon<br>Civil Engineer | SCALE / DATE | **DWG # 2/13** |
| | DRAWING STATUS: APPROVAL ☐ APPROVED ☐ | 3. ANY DISCREPANCY IN THE DRAWING SHALL BE IMMEDIATELY BROUGHT TO THE NOTICE OF THE DESIGNER | | | REF DWG / September, 2020 | |

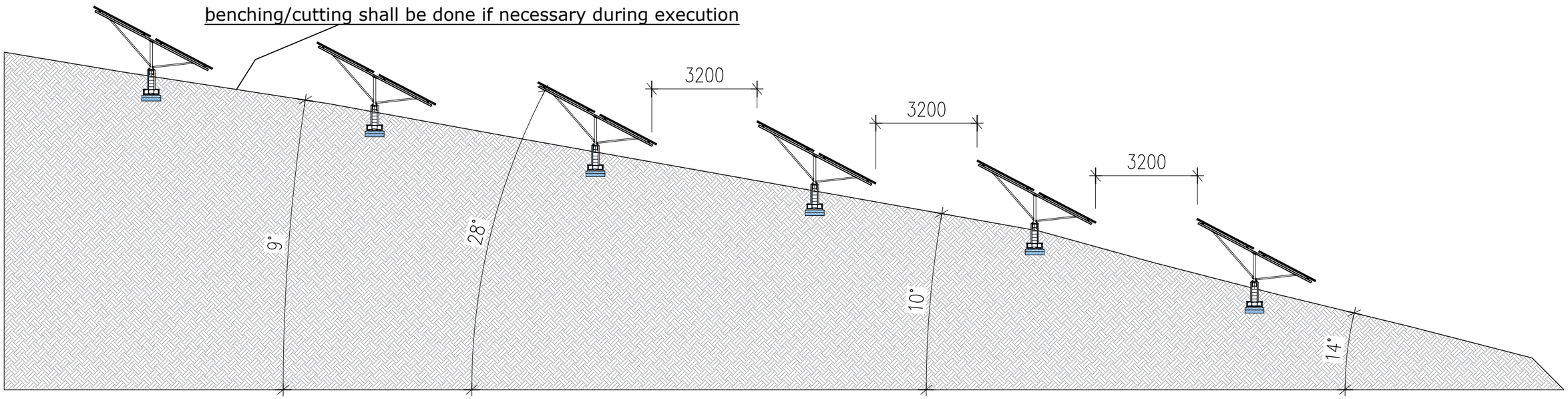


# SECTIONAL DETAIL OF SLOPE

| | | | | | | |
|---|---|---|---|---|---|---|
| **BHUTAN POWER CORPORATION LIMITED**<br>DISTRIBUTION SERVICES<br>DISTRIBUTION CONSTRUCTION DEPARTMENT<br>RENEWABLE ENERGY DIVISION | PROJECT TITLE | REFERENCE NOTES | APPROVED BY | DESIGNED BY | DRAWING TITLE | DRAWING NO. |
| | **Supply, Install, Testing and Commissioning of 180kW Grid-tied ground mounted Solar Power Project at Rubessa under Wangdue district, Bhutan** | 1. ALL MEASUREMENTS IN THE DRAWING ARE IN mm UNLESS AND OTHERWISE MENTIONED | Engineering & Research Department | Renewal Energy Division | REFER DRAWING | |
| | | 2. THE MEASUREMENTS IN THE DRAWING ARE TO BE READ AND NOT MEASURED | Kushal Chhetri<br>Senior Manager | Kinley Peldon<br>Civil Engineer | SCALE / DATE | **DWG # 3/13** |
| | DRAWING STATUS: APPROVAL ☐ APPROVED ☐ | 3. ANY DISCREPANCY IN THE DRAWING SHALL BE IMMEDIATELY BROUGHT TO THE NOTICE OF THE DESIGNER | | | REF DWG / September, 2020 | |

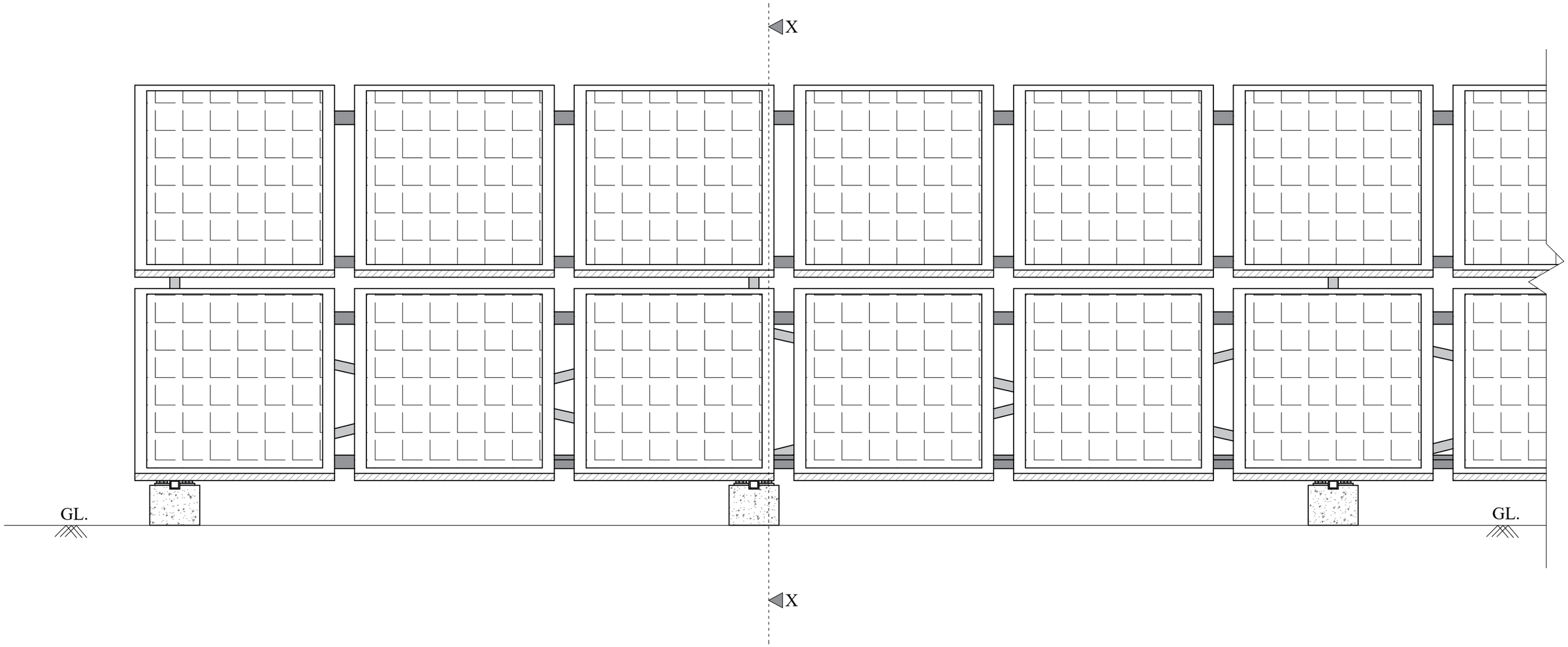


# FRONT VIEW WITH PANELS

| | | | | | | |
|---|---|---|---|---|---|---|
| **BHUTAN POWER CORPORATION LIMITED**<br>DISTRIBUTION SERVICES<br>DISTRIBUTION CONSTRUCTION DEPARTMENT<br>RENEWABLE ENERGY DIVISION | PROJECT TITLE | REFERENCE NOTES | APPROVED BY | DESIGNED BY | DRAWING TITLE | DRAWING NO. |
| | **Supply, Install, Testing and Commissioning of 180kW Grid-tied ground mounted Solar Power Project at Rubessa under Wangdue district, Bhutan** | 1. ALL MEASUREMENTS IN THE DRAWING ARE IN mm UNLESS AND OTHERWISE MENTIONED | Engineering & Research Department | Renewal Energy Division | REFER DRAWING | |
| | | 2. THE MEASUREMENTS IN THE DRAWING ARE TO BE READ AND NOT MEASURED | Kushal Chhetri<br>Senior Manager | Kinley Peldon<br>Civil Engineer | SCALE / DATE | **DWG # 4/13** |
| | DRAWING STATUS: APPROVAL ☐ APPROVED ☐ | 3. ANY DISCREPANCY IN THE DRAWING SHALL BE IMMEDIATELY BROUGHT TO THE NOTICE OF THE DESIGNER | | | REF DWG / September, 2020 | |

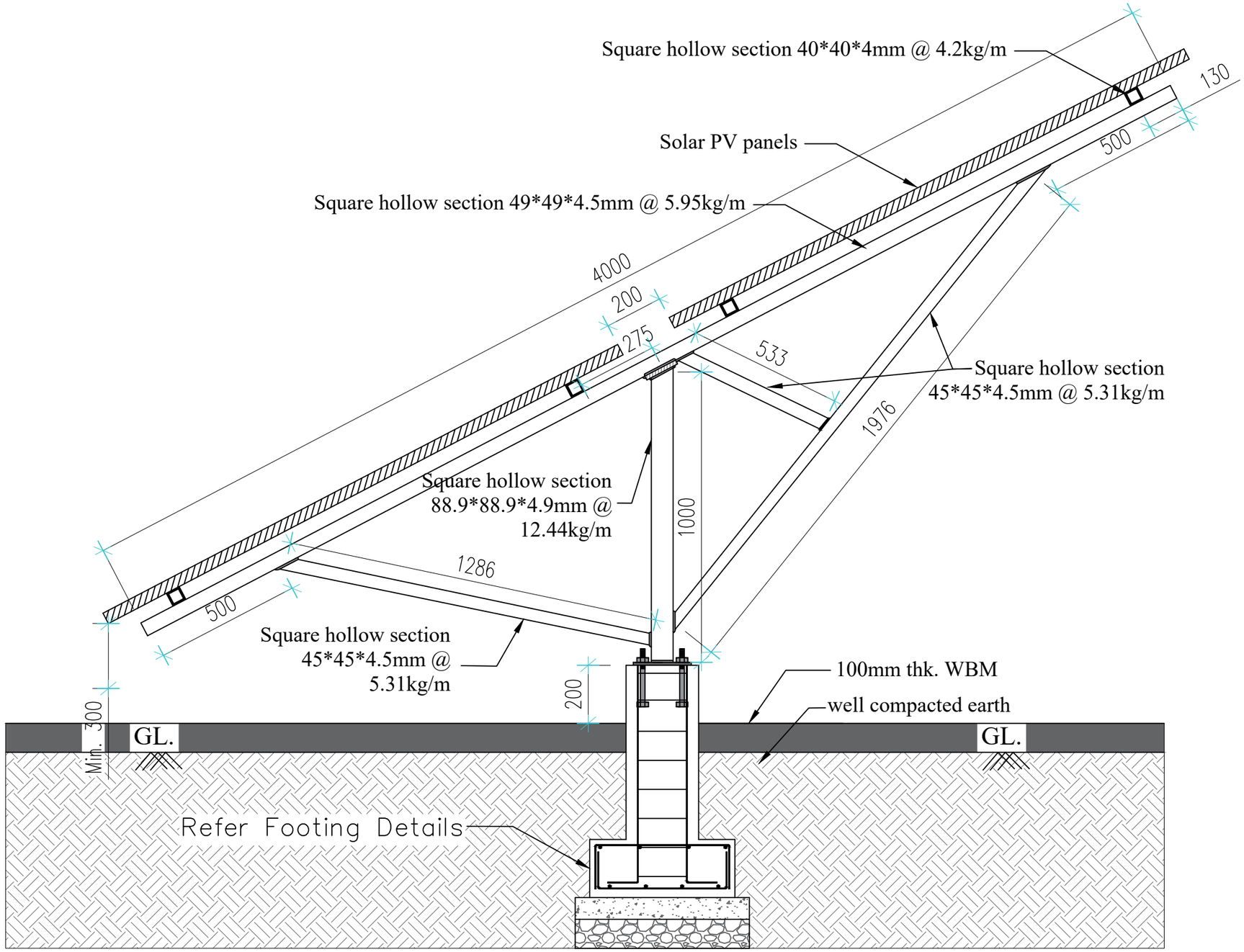


# SECTION X-X

| | | | | | | |
|---|---|---|---|---|---|---|
| **BHUTAN POWER CORPORATION LIMITED**<br>DISTRIBUTION SERVICES<br>DISTRIBUTION CONSTRUCTION DEPARTMENT<br>RENEWABLE ENERGY DIVISION | PROJECT TITLE | REFERENCE NOTES | APPROVED BY | DESIGNED BY | DRAWING TITLE | DRAWING NO. |
| | **Supply, Install, Testing and Commissioning of 180kW Grid-tied ground mounted Solar Power Project at Rubessa under Wangdue district, Bhutan** | 1. ALL MEASUREMENTS IN THE DRAWING ARE IN mm UNLESS AND OTHERWISE MENTIONED | Engineering & Research Department | Renewal Energy Division | REFER DRAWING | |
| | | 2. THE MEASUREMENTS IN THE DRAWING ARE TO BE READ AND NOT MEASURED | Kushal Chhetri<br>Senior Manager | Kinley Peldon<br>Civil Engineer | SCALE / DATE | **DWG # 5/13** |
| | DRAWING STATUS / APPROVAL ☐ / APPROVED ☐ | 3. ANY DISCREPANCY IN THE DRAWING SHALL BE IMMEDIATELY BROUGHT TO THE NOTICE OF THE DESIGNER | | | REF DWG / September, 2020 | |

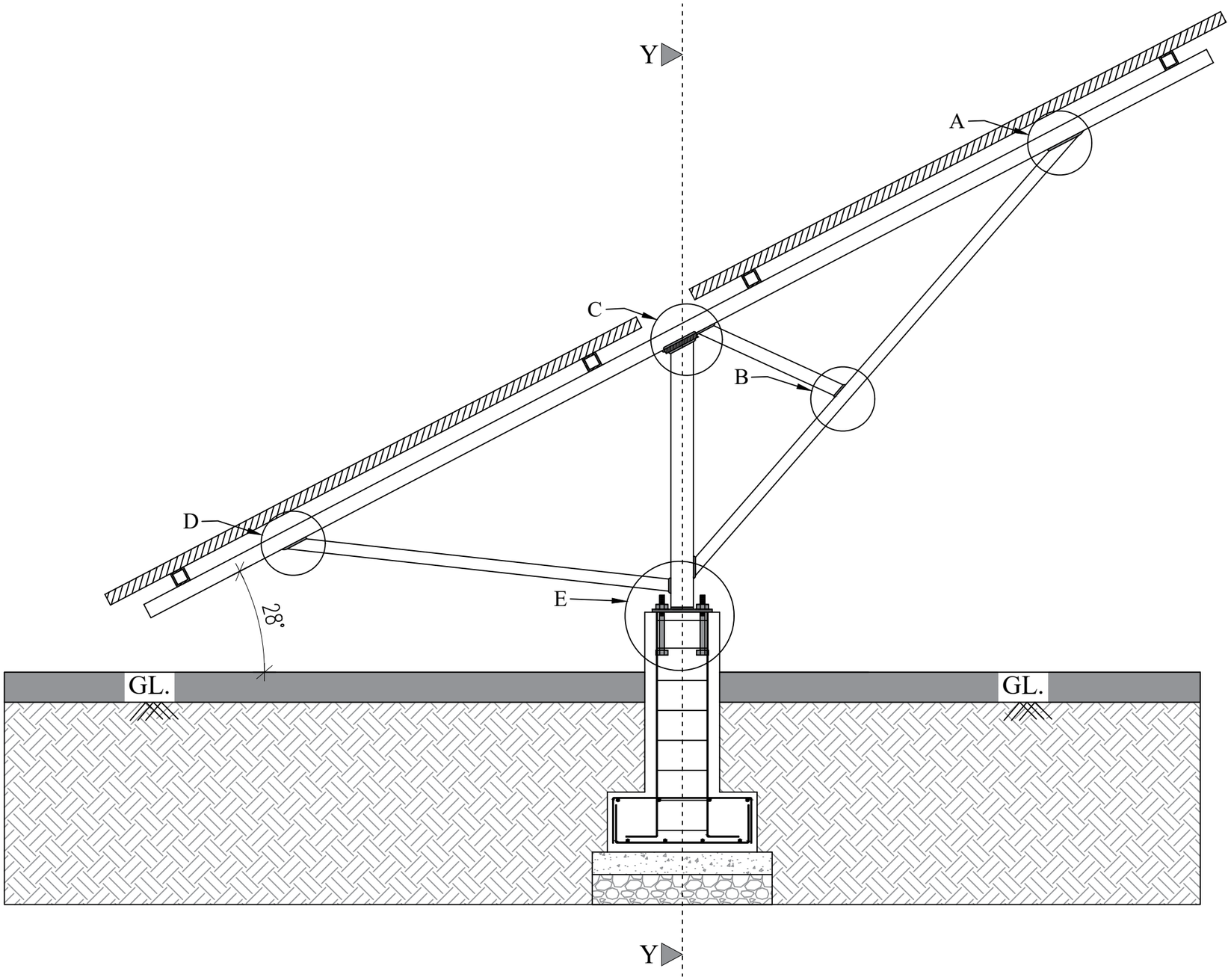


# SECTION X-X

| | | | | | | |
|---|---|---|---|---|---|---|
| **BHUTAN POWER CORPORATION LIMITED**<br>DISTRIBUTION SERVICES<br>DISTRIBUTION CONSTRUCTION DEPARTMENT<br>RENEWABLE ENERGY DIVISION | PROJECT TITLE | REFERENCE NOTES | APPROVED BY | DESIGNED BY | DRAWING TITLE | DRAWING NO. |
| | **Supply, Install, Testing and Commissioning of 180kW Grid-tied ground mounted Solar Power Project at Rubessa under Wangdue district, Bhutan** | 1. ALL MEASUREMENTS IN THE DRAWING ARE IN mm UNLESS AND OTHERWISE MENTIONED | Engineering & Research Department | Renewal Energy Division | REFER DRAWING | |
| | | 2. THE MEASUREMENTS IN THE DRAWING ARE TO BE READ AND NOT MEASURED | Kushal Chhetri<br>Senior Manager | Kinley Peldon<br>Civil Engineer | SCALE / DATE | **DWG # 6/13** |
| | DRAWING STATUS: APPROVAL ☐ APPROVED ☐ | 3. ANY DISCREPANCY IN THE DRAWING SHALL BE IMMEDIATELY BROUGHT TO THE NOTICE OF THE DESIGNER | | | REF DWG / September, 2020 | |

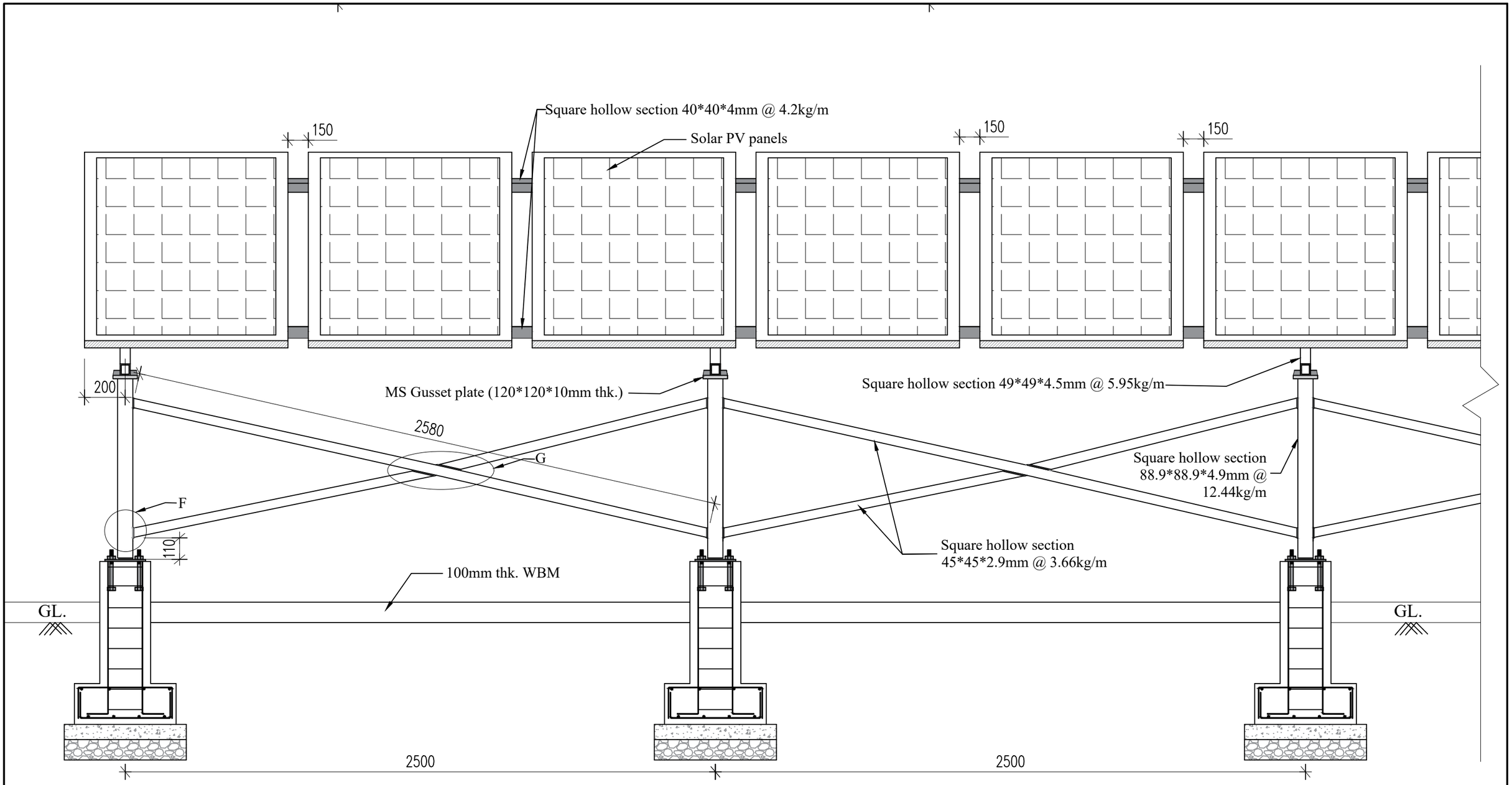


# SECTION Y-Y

| | | | | | | |
|---|---|---|---|---|---|---|
| **BHUTAN POWER CORPORATION LIMITED**<br>DISTRIBUTION SERVICES<br>DISTRIBUTION CONSTRUCTION DEPARTMENT<br>RENEWABLE ENERGY DIVISION | PROJECT TITLE | REFERENCE NOTES | APPROVED BY | DESIGNED BY | DRAWING TITLE | DRAWING NO. |
| | **Supply, Install, Testing and Commissioning of 180kW Grid-tied ground mounted Solar Power Project at Rubessa under Wangdue district, Bhutan** | 1. ALL MEASUREMENTS IN THE DRAWING ARE IN mm UNLESS AND OTHERWISE MENTIONED | Engineering & Research Department | Renewal Energy Division | REFER DRAWING | |
| | | 2. THE MEASUREMENTS IN THE DRAWING ARE TO BE READ AND NOT MEASURED | Kushal Chhetri<br>Senior Manager | Kinley Peldon<br>Civil Engineer | SCALE / DATE | **DWG # 7/13** |
| | DRAWING STATUS: APPROVAL ☐ APPROVED ☐ | 3. ANY DISCREPANCY IN THE DRAWING SHALL BE IMMEDIATELY BROUGHT TO THE NOTICE OF THE DESIGNER | | | REF DWG / September, 2020 | |

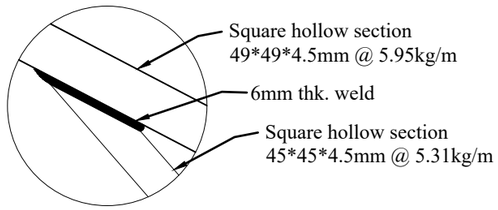


Joint Detail A

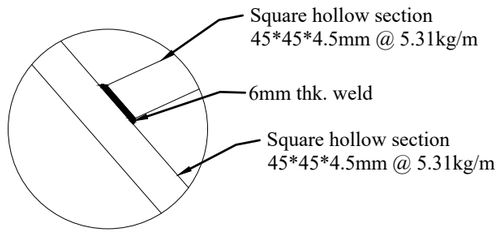


Joint Detail B

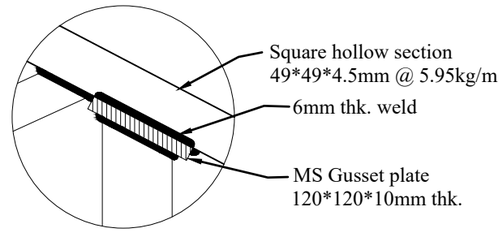


Joint Detail C

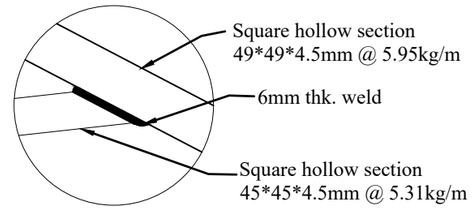


Joint Detail D

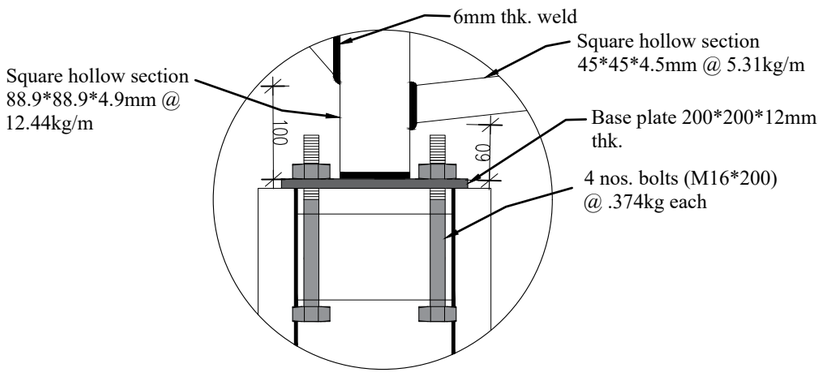


Joint Detail E

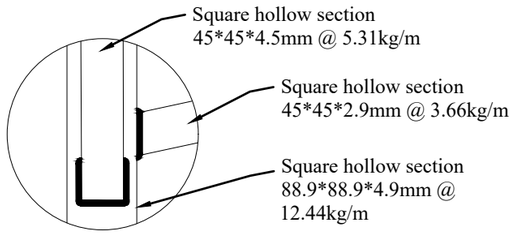


Joint Detail F

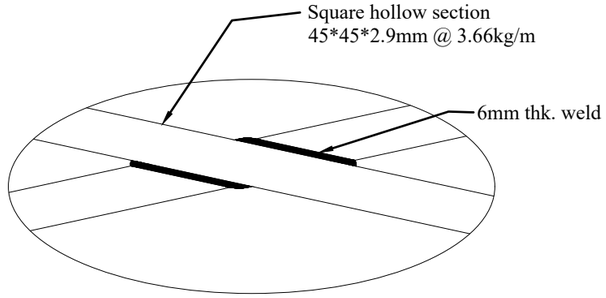


Joint Detail G

| | | | | | | |
|---|---|---|---|---|---|---|
| **BHUTAN POWER CORPORATION LIMITED**<br>DISTRIBUTION SERVICES<br>DISTRIBUTION CONSTRUCTION DEPARTMENT<br>RENEWABLE ENERGY DIVISION | PROJECT TITLE | REFERENCE NOTES | APPROVED BY | DESIGNED BY | DRAWING TITLE | DRAWING NO. |
| | **Supply, Install, Testing and Commissioning of 180kW Grid-tied ground mounted Solar Power Project at Rubessa under Wangdue district, Bhutan** | 1. ALL MEASUREMENTS IN THE DRAWING ARE IN mm UNLESS AND OTHERWISE MENTIONED | Engineering & Research Department | Renewal Energy Division | REFER DRAWING | |
| | | 2. THE MEASUREMENTS IN THE DRAWING ARE TO BE READ AND NOT MEASURED | Kushal Chhetri<br>Senior Manager | Kinley Peldon<br>Civil Engineer | SCALE / DATE | **DWG # 8/13** |
| | DRAWING STATUS / APPROVAL ☐ / APPROVED ☐ | 3. ANY DISCREPANCY IN THE DRAWING SHALL BE IMMEDIATELY BROUGHT TO THE NOTICE OF THE DESIGNER | | | REF DWG / September, 2020 | |

Note:

1. Bottom bars for footings : 12mm dia. @ 150mm c/c both ways
2. Top bars for footings : 12mm dia. @ 150mm c/c both ways
3. Grade of RCC: M20 (1:1.5:3, 20mm agg.)
4. Concrete Cover: a) Foundation : 40mm
   b) Column : 25 mm
5. Section sizes provided/drawn here refers to unfinished surfaces / doesn't include applied finishes.
6. The column vertical/main/longitudinal rebars shall not be bent/cranked without engineers prior approval.
7. Do not make any unspecified holes or chisels or place conduits, pipes, etc. through the structural members without engineer's prior approval.
8. Column's formworks shall be removed only after required strength of concrete is developed.

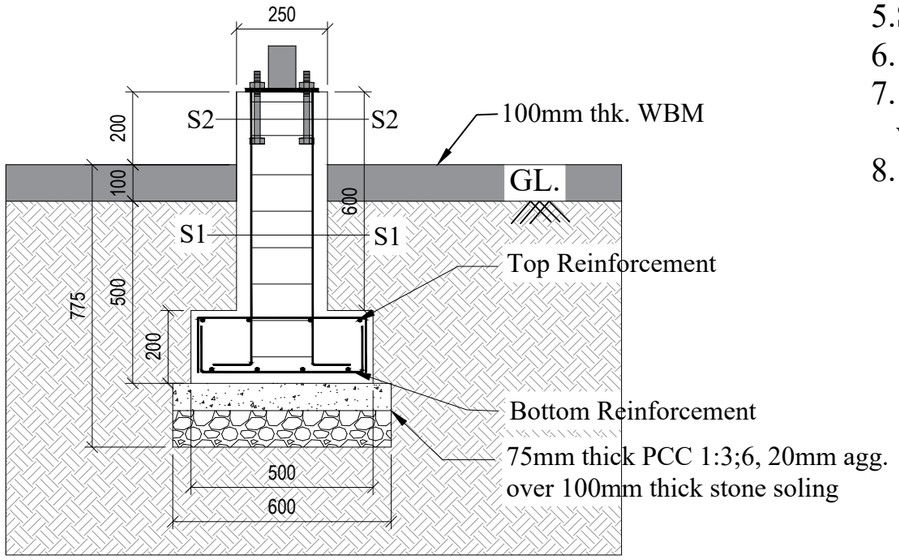


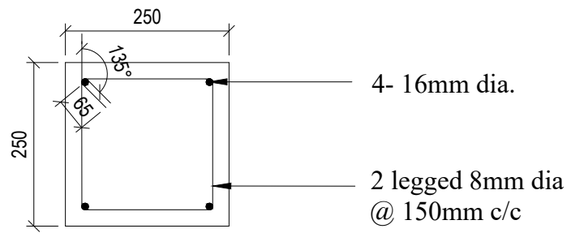


Section S1-S1

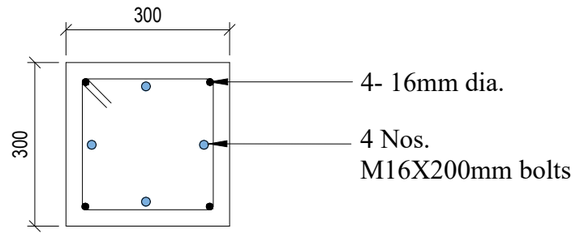


Section S2-S2

Details of Column

# DETAILS OF FOOTING

| | | | | | | |
|---|---|---|---|---|---|---|
| **BHUTAN POWER CORPORATION LIMITED**<br>DISTRIBUTION SERVICES<br>DISTRIBUTION CONSTRUCTION DEPARTMENT<br>RENEWABLE ENERGY DIVISION | PROJECT TITLE<br>**Supply, Install, Testing and Commissioning of 180kW Grid-tied ground mounted Solar Power Project at Rubessa under Wangdue district, Bhutan**<br>DRAWING STATUS: APPROVAL ☐ APPROVED ☐ | REFERENCE NOTES<br>1. ALL MEASUREMENTS IN THE DRAWING ARE IN mm UNLESS AND OTHERWISE MENTIONED<br>2. THE MEASUREMENTS IN THE DRAWING ARE TO BE READ AND NOT MEASURED<br>3. ANY DISCREPANCY IN THE DRAWING SHALL BE IMMEDIATELY BROUGHT TO THE NOTICE OF THE DESIGNER | APPROVED BY<br>Engineering & Research Department<br>Kushal Chhetri<br>Senior Manager | DESIGNED BY<br>Renewal Energy Division<br>Kinley Peldon<br>Civil Engineer | DRAWING TITLE<br>REFER DRAWING<br>SCALE: REF DWG<br>DATE: September, 2020 | DRAWING NO.<br>**DWG # 9/13** |

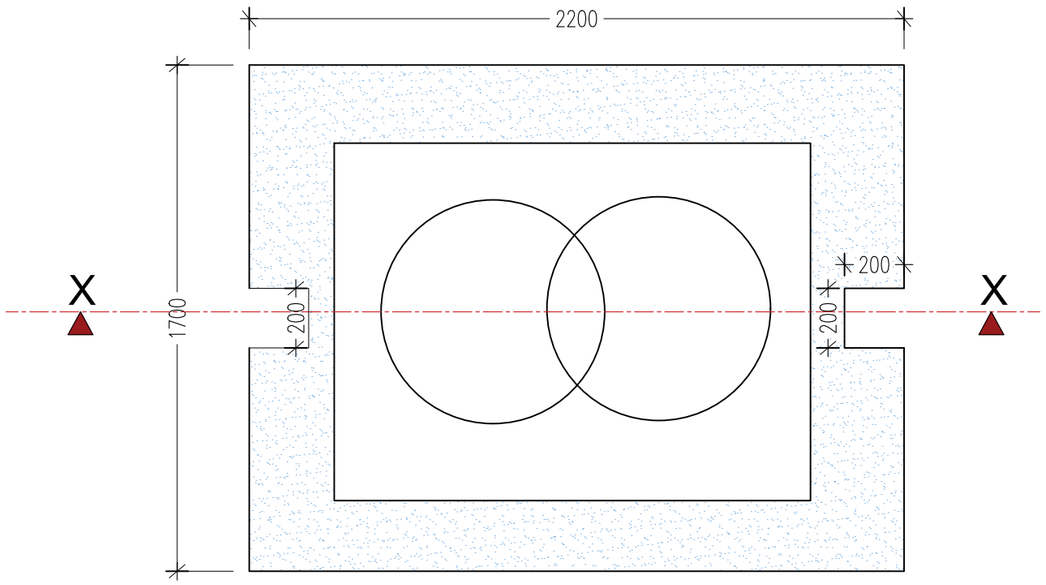


PLAN

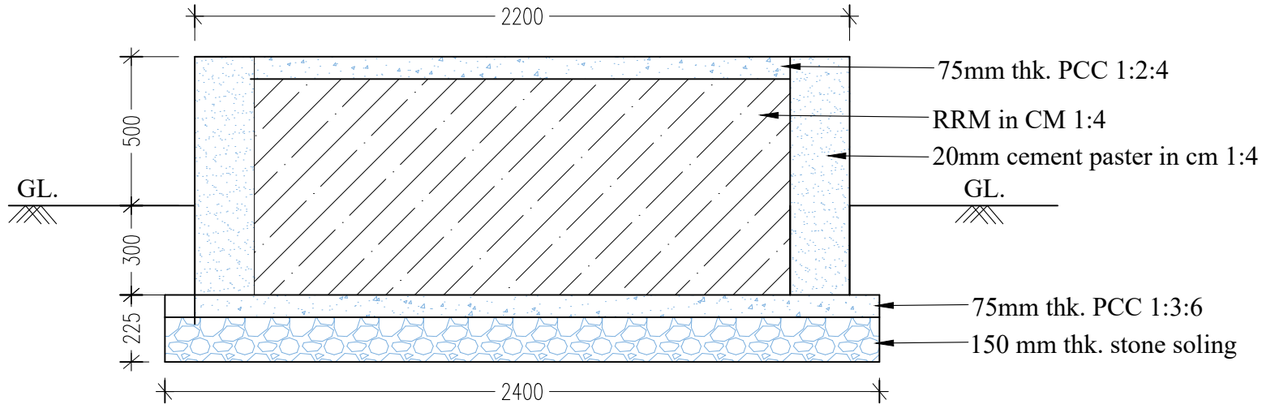


X - X SECTION

## PLATFORM FOR 250kVA POWER TRANSFORMER

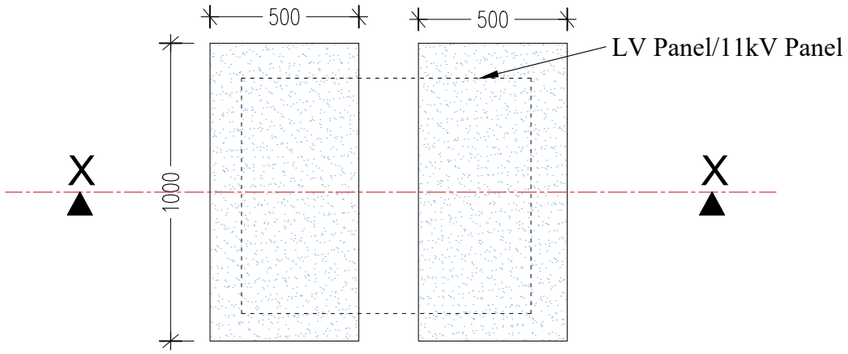


PLAN

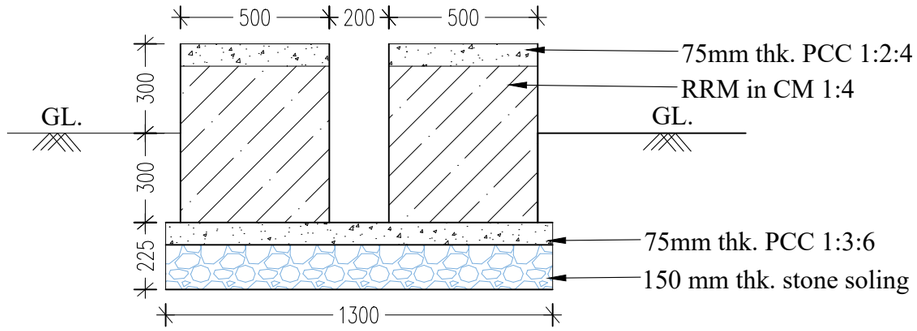


X - X SECTION

## FOUNDATION FOR LV PANEL & 11kV PANEL

| | | | | | | |
|---|---|---|---|---|---|---|
| **BHUTAN POWER CORPORATION LIMITED**<br>DISTRIBUTION SERVICES<br>DISTRIBUTION CONSTRUCTION DEPARTMENT<br>RENEWABLE ENERGY DIVISION | PROJECT TITLE | REFERENCE NOTES | APPROVED BY | DESIGNED BY | DRAWING TITLE | DRAWING NO. |
| | **Supply, Install, Testing and Commissioning of 180kW Grid-tied ground mounted Solar Power Project at Rubessa under Wangdue district, Bhutan** | 1. ALL MEASUREMENTS IN THE DRAWING ARE IN mm UNLESS AND OTHERWISE MENTIONED | Engineering & Research Department | Renewal Energy Division | REFER DRAWING | |
| | | 2. THE MEASUREMENTS IN THE DRAWING ARE TO BE READ AND NOT MEASURED | Kushal Chhetri<br>Senior Manager | Kinley Peldon<br>Civil Engineer | SCALE / DATE | **DWG # 10/13** |
| | DRAWING STATUS: APPROVAL ☐ APPROVED ☐ | 3. ANY DISCREPANCY IN THE DRAWING SHALL BE IMMEDIATELY BROUGHT TO THE NOTICE OF THE DESIGNER | | | REF DWG / September, 2020 | |

# Fencing with G.I. Chain Link Mesh

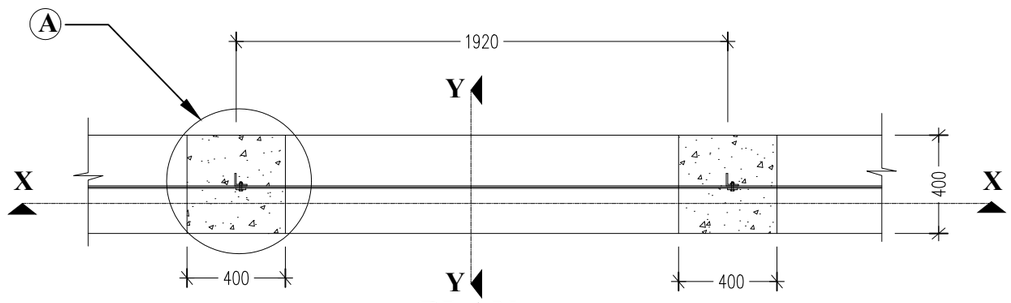


## PLAN

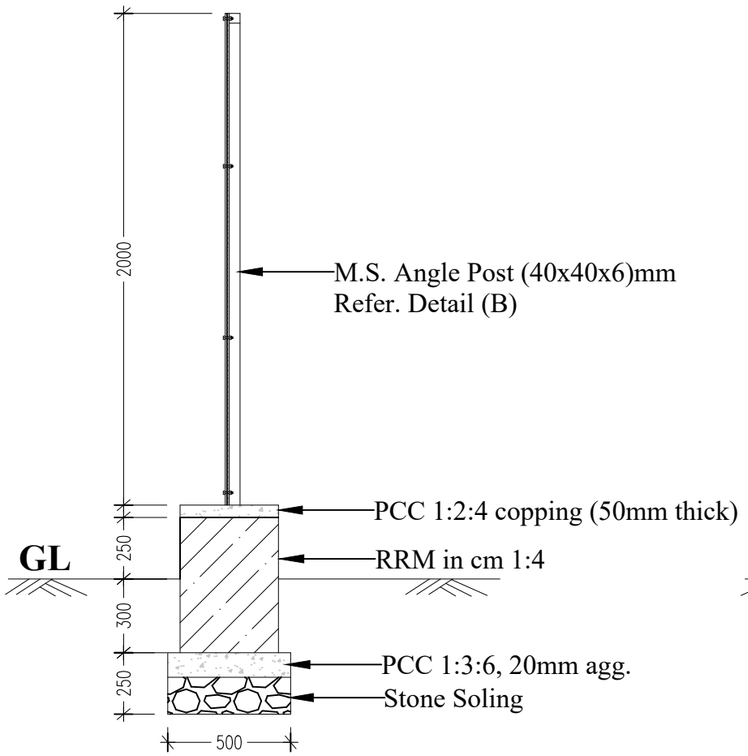


## SECTION (Y-Y)

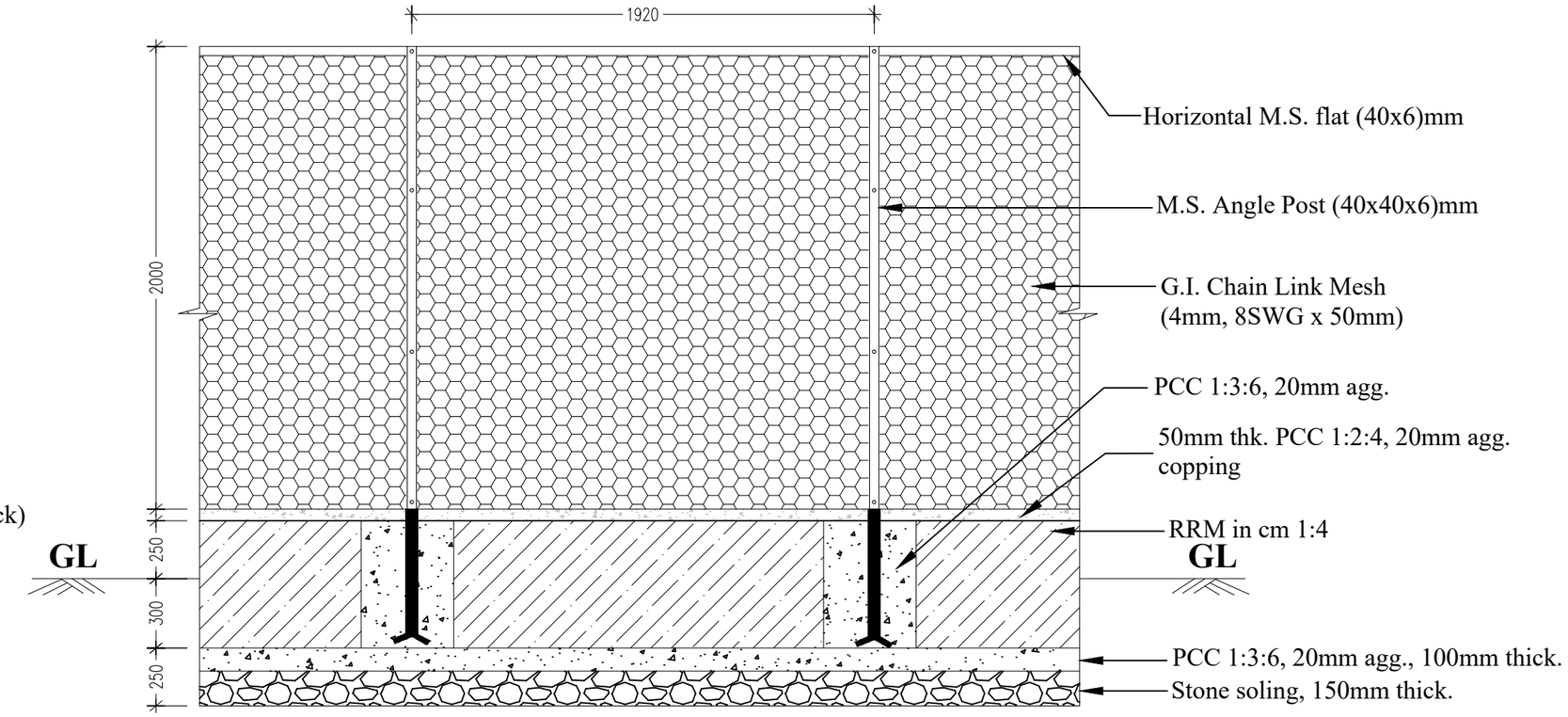


## SECTIONAL ELEVATION (X-X)

| | | | | | | |
|---|---|---|---|---|---|---|
| **BHUTAN POWER CORPORATION LIMITED**<br>DISTRIBUTION SERVICES<br>DISTRIBUTION CONSTRUCTION DEPARTMENT<br>RENEWABLE ENERGY DIVISION | PROJECT TITLE<br>**Supply, Install, Testing and Commissioning of 180kW Grid-tied ground mounted Solar Power Project at Rubessa under Wangdue district, Bhutan**<br>DRAWING STATUS: APPROVAL ☐ APPROVED ☐ | REFERENCE NOTES<br>1. ALL MEASUREMENTS IN THE DRAWING ARE IN mm UNLESS AND OTHERWISE MENTIONED<br>2. THE MEASUREMENTS IN THE DRAWING ARE TO BE READ AND NOT MEASURED<br>3. ANY DISCREPANCY IN THE DRAWING SHALL BE IMMEDIATELY BROUGHT TO THE NOTICE OF THE DESIGNER | APPROVED BY<br>Engineering & Research Department<br>Kushal Chhetri<br>Senior Manager | DESIGNED BY<br>Renewal Energy Division<br>Kinley Peldon<br>Civil Engineer | DRAWING TITLE<br>REFER DRAWING<br>SCALE: REF DWG<br>DATE: September, 2020 | DRAWING NO.<br>**DWG # 11/13** |

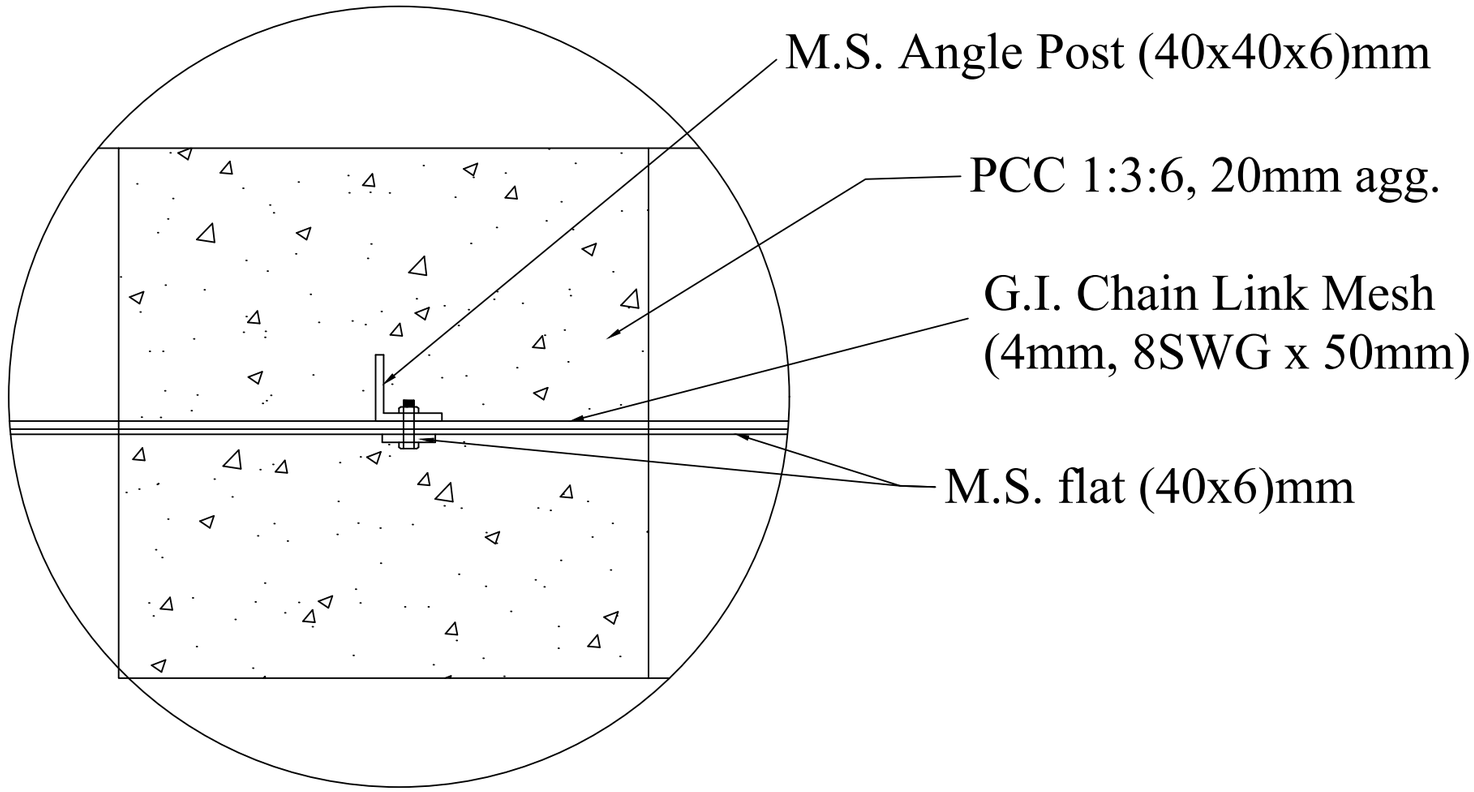


DETAIL A

| | | | | | | |
|---|---|---|---|---|---|---|
| **BHUTAN POWER CORPORATION LIMITED**<br>**DISTRIBUTION SERVICES**<br>**DISTRIBUTION CONSTRUCTION DEPARTMENT**<br>**RENEWABLE ENERGY DIVISION** | PROJECT TITLE | REFERENCE NOTES | APPROVED BY | DESIGNED BY | DRAWING TITLE | DRAWING NO. |
| | **Supply, Install, Testing and Commissioning of 180kW Grid-tied ground mounted Solar Power Project at Rubessa under Wangdue district, Bhutan** | 1. ALL MEASUREMENTS IN THE DRAWING ARE IN mm UNLESS AND OTHERWISE MENTIONED | Engineering & Research Department | Renewal Energy Division | REFER DRAWING | |
| | | 2. THE MEASUREMENTS IN THE DRAWING ARE TO BE READ AND NOT MEASURED | Kushal Chhetri<br>Senior Manager | Kinley Peldon<br>Civil Engineer | SCALE / DATE | **DWG # 12/13** |
| | DRAWING STATUS / APPROVAL ☐ / APPROVED ☐ | 3. ANY DISCREPANCY IN THE DRAWING SHALL BE IMMEDIATELY BROUGHT TO THE NOTICE OF THE DESIGNER | | | REF DWG / September, 2020 | |

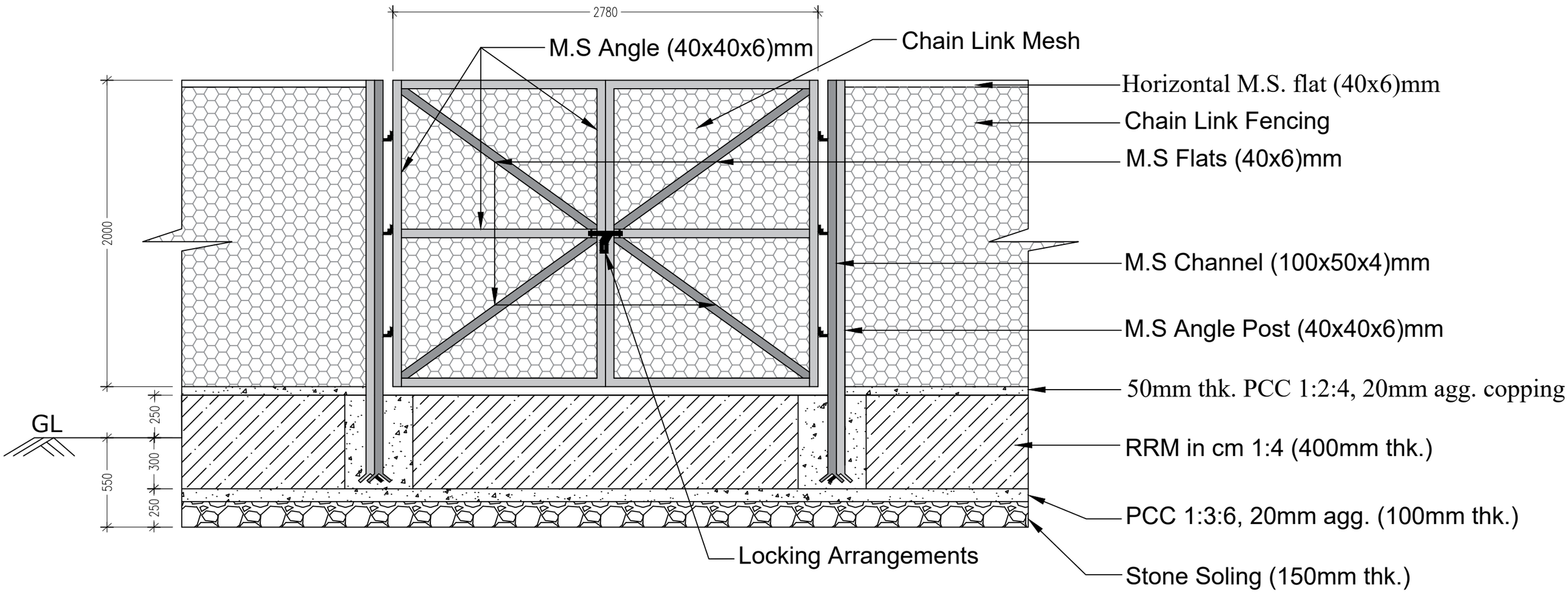


## SECTIONAL ELEVATION OF GATE FOR FENCING

| | | | | | | |
|---|---|---|---|---|---|---|
| **BHUTAN POWER CORPORATION LIMITED**<br>DISTRIBUTION SERVICES<br>DISTRIBUTION CONSTRUCTION DEPARTMENT<br>RENEWABLE ENERGY DIVISION | PROJECT TITLE | REFERENCE NOTES | APPROVED BY | DESIGNED BY | DRAWING TITLE | DRAWING NO. |
| | **Supply, Install, Testing and Commissioning of 180kW Grid-tied ground mounted Solar Power Project at Rubessa under Wangdue district, Bhutan** | 1. ALL MEASUREMENTS IN THE DRAWING ARE IN mm UNLESS AND OTHERWISE MENTIONED | Engineering & Research Department | Renewal Energy Division | REFER DRAWING | |
| | | 2. THE MEASUREMENTS IN THE DRAWING ARE TO BE READ AND NOT MEASURED | Kushal Chhetri<br>Senior Manager | Kinley Peldon<br>Civil Engineer | SCALE / DATE | **DWG # 13/13** |
| | DRAWING STATUS: APPROVAL ☐ APPROVED ☐ | 3. ANY DISCREPANCY IN THE DRAWING SHALL BE IMMEDIATELY BROUGHT TO THE NOTICE OF THE DESIGNER | | | REF DWG / September, 2020 | |

# ELECTRICAL DRAWINGS

| | | | | | | |
|---|---|---|---|---|---|---|
| **BHUTAN POWER CORPORATION LIMITED**<br>DISTRIBUTION SERVICES<br>DISTRIBUTION CONSTRUCTION DEPARTMENT<br>RENEWABLE ENERGY DIVISION | PROJECT TITLE | REFERENCE NOTES | APPROVED BY | DESIGNED BY | DRAWING TITLE | DRAWING NO. |
| | **Supply, Install, Testing and Commissioning of 180kW Grid-tied ground mounted Solar Power Project at Rubessa under Wangdue district, Bhutan** | 1. ALL MEASUREMENTS IN THE DRAWING ARE IN mm UNLESS AND OTHERWISE MENTIONED | RED, DCD, BPC | RED, DCD, BPC | REFER DRAWING | |
| | | 2. THE MEASUREMENTS IN THE DRAWING ARE TO BE READ AND NOT MEASURED | Pema Wangchuk<br>Manager | Rozal Adhikari<br>Electrical Engineer | SCALE / DATE | |
| | DRAWING STATUS: APPROVAL ☐ APPROVED ☐ | 3. ANY DISCREPANCY IN THE DRAWING SHALL BE IMMEDIATELY BROUGHT TO THE NOTICE OF THE DESIGNER | | | REF DWG / September, 2020 | |

LEGENDS

| Sl. No | SYMBOL | DESCRIPTION |
|---|---|---|
| 1 | 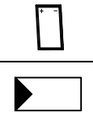 | 345Wp Polycrystalline Solar PV Panel, Efficiency: >17% |
| 2 | 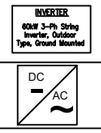  | 60kW Three Phase String Inverter with efficiency >98% |
| 3 | | String Combiner Box (SCB) of two types for different MPPTs:<br>(1) 6 incoming strings and 1 output string and<br>(2) 4 incoming strings and 1 output string<br>Both shall comply to 1000Vdc with SPDs, Fuses and outgoing OTDC (Optimum Two-pole DC) switch disconnector |
| 4 | | |
| 5 | | 40 mm High density poly-ethylene (HDPE) 12.5 PN Pipe for laying DC cables from panels to SCBs and from SCBs to Inverter i/p terminals |
| 6 | | 250kVA, 0.415/11kV Step-up dry-type Transformer, z=5% |
| 7 | | |
| 8 | | AC Earthing |
| 9 | | DC Earthing |
| 10 | | Fuse |
| 11 | | OTDC Switch Disconnector |
| 12 | | Lightning Arrestors |
| 13 |  | |
| 14 | | Surge Protection Device (SPD), Class/ Type 2 |
| 15 | | 4 Strips, 600mm, 400A, Copper Busbar with Cubicles |
| 16 | | Air Break Switch |
| 17 | | 11kV, 630A, 3P, 16kA Vacuum Circuit Breaker (VCB) |
| 18 | MFM | Multifunction Meter |
| 19 | | Potential Transformer |

**BHUTAN POWER CORPORATION LIMITED**
**DISTRIBUTION SERVICES**
**DISTRIBUTION CONSTRUCTION DEPARTMENT**
**RENEWABLE ENERGY DIVISION**

| PROJECT TITLE | REFERENCE NOTES | APPROVED BY | DESIGNED BY | DRAWING TITLE | | DRAWING NO. |
|---|---|---|---|---|---|---|
| **Supply, Install, Testing & Commissioning of 180kW Grid-Tied Ground-Mounted Solar Power Project at Rubessa, Wangdue** | 1. ALL MEASUREMENTS IN THE DRAWING ARE IN mm UNLESS AND OTHERWISE MENTIONED | RED, DCD BPC | RED, DCD BPC | REFER DRAWING | | |
| | 2. THE MEASUREMENTS IN THE DRAWING ARE TO BE READ AND NOT MEASURED | PEMA WANGCHUK MANAGER | ROZAL ADHIKARI ELECTRICAL ENGINEER | SCALE | DATE | **DWG # 1/6** |
| DRAWING STATUS: APPROVAL ☐ APPROVED ☐ | 3. ANY DISCREPANCY IN THE DRAWING SHALL BE IMMEDIATELY BROUGHT TO THE NOTICE OF THE DESIGNER | | | REF DWG | SEPTEMBER, 2020 | |

# STRING WIRING LAYOUT PLAN

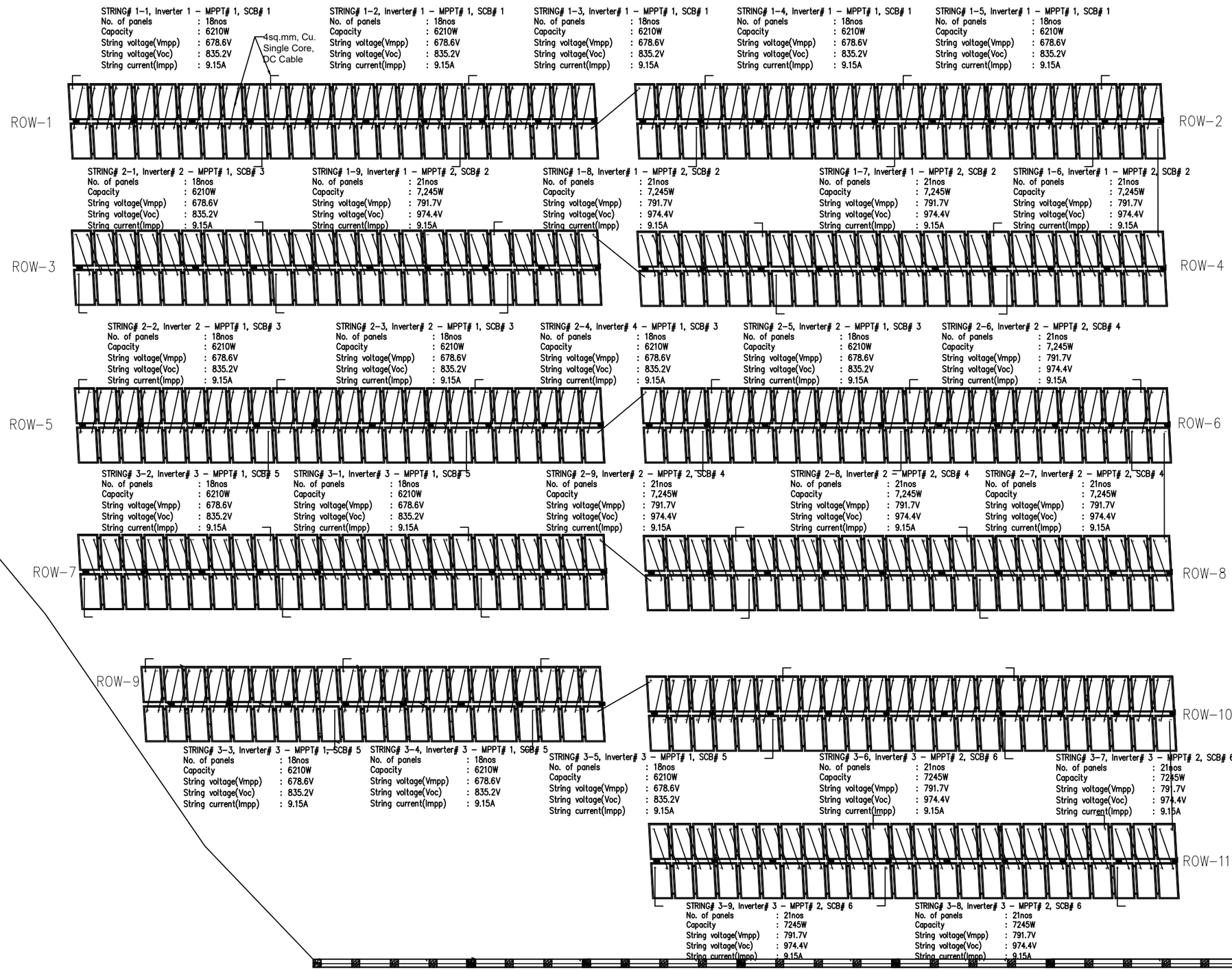


| | | | | | | |
|---|---|---|---|---|---|---|
| **BHUTAN POWER CORPORATION LIMITED**<br>DISTRIBUTION SERVICES<br>DISTRIBUTION CONSTRUCTION DEPARTMENT<br>RENEWABLE ENERGY DIVISION | PROJECT TITLE | REFERENCE NOTES | APPROVED BY | DESIGNED BY | DRAWING TITLE | DRAWING NO. |
| | **Supply, Install, Testing & Commissioning of 180kW Grid-Tied Ground-Mounted Solar Power Project at Rubessa, Wangdue** | 1. ALL MEASUREMENTS IN THE DRAWING ARE IN mm UNLESS AND OTHERWISE MENTIONED | RED, DCD BPC | RED, DCD BPC | REFER DRAWING | |
| | | 2. THE MEASUREMENTS IN THE DRAWING ARE TO BE READ AND NOT MEASURED | PEMA WANGCHUK<br>MANAGER | ROZAL ADHIKARI<br>ELECTRICAL ENGINEER | SCALE / DATE | **DWG # 2/6** |
| | DRAWING STATUS: APPROVAL ☐ APPROVED ☐ | 3. ANY DISCREPANCY IN THE DRAWING SHALL BE IMMEDIATELY BROUGHT TO THE NOTICE OF THE DESIGNER | | | REF DWG / SEPTEMBER, 2020 | |

# STRING COMBINER BOXES AND INVERTER LAYOUT PLAN

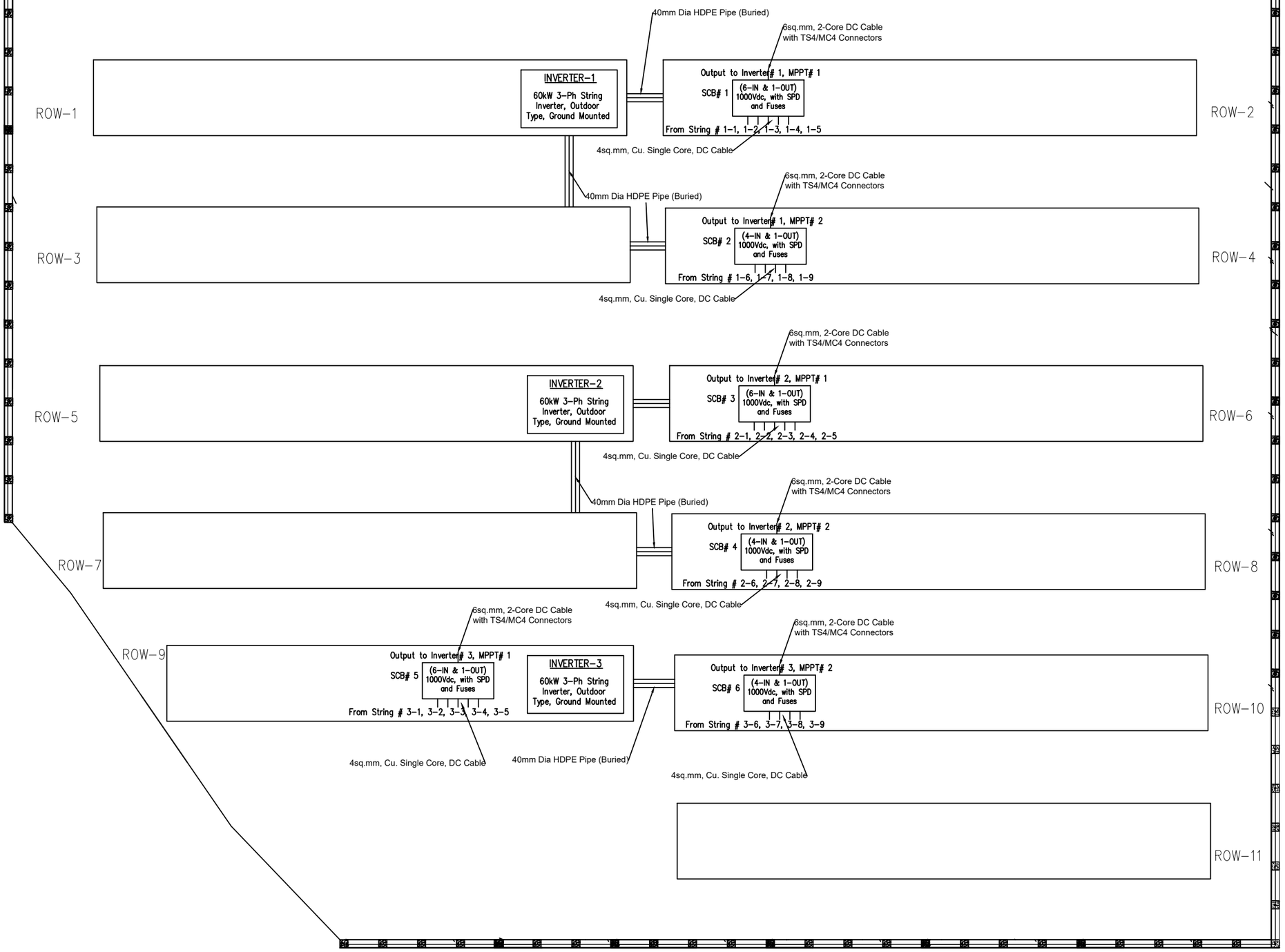


| | | | | | | |
|---|---|---|---|---|---|---|
| **BHUTAN POWER CORPORATION LIMITED**<br>DISTRIBUTION SERVICES<br>DISTRIBUTION CONSTRUCTION DEPARTMENT<br>RENEWABLE ENERGY DIVISION | PROJECT TITLE | REFERENCE NOTES | APPROVED BY | DESIGNED BY | DRAWING TITLE | DRAWING NO. |
| | **Supply, Install, Testing & Commissioning of 180kW Grid-Tied Ground-Mounted Solar Power Project at Rubessa, Wangdue** | 1. ALL MEASUREMENTS IN THE DRAWING ARE IN mm UNLESS AND OTHERWISE MENTIONED | RED, DCD BPC | RED, DCD BPC | REFER DRAWING | |
| | | 2. THE MEASUREMENTS IN THE DRAWING ARE TO BE READ AND NOT MEASURED | PEMA WANGCHUK<br>MANAGER | ROZAL ADHIKARI<br>ELECTRICAL ENGINEER | SCALE / DATE | **DWG # 3/6** |
| | DRAWING STATUS: APPROVAL ☐ APPROVED ☐ | 3. ANY DISCREPANCY IN THE DRAWING SHALL BE IMMEDIATELY BROUGHT TO THE NOTICE OF THE DESIGNER | | | REF DWG / SEPTEMBER, 2020 | |

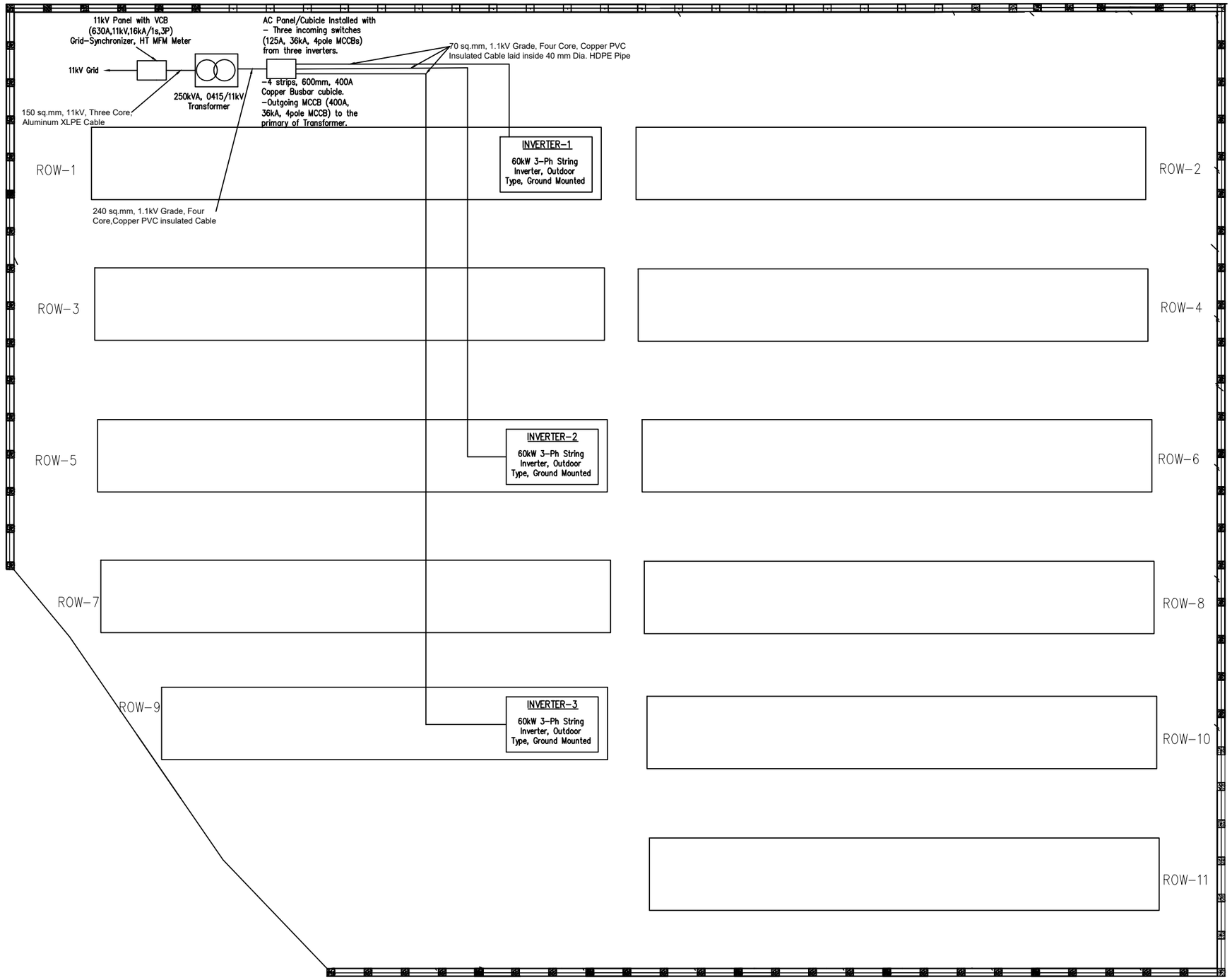


LAYOUT PLAN OF 415V AND 11kV AC CABINET PANEL

| | | | | | | |
|---|---|---|---|---|---|---|
| **BHUTAN POWER CORPORATION LIMITED**<br>DISTRIBUTION SERVICES<br>DISTRIBUTION CONSTRUCTION DEPARTMENT<br>RENEWABLE ENERGY DIVISION | PROJECT TITLE | REFERENCE NOTES | APPROVED BY | DESIGNED BY | DRAWING TITLE | DRAWING NO. |
| | **Supply, Install, Testing & Commissioning of 180kW Grid-Tied Ground-Mounted Solar Power Project at Rubessa, Wangdue** | 1. ALL MEASUREMENTS IN THE DRAWING ARE IN mm UNLESS AND OTHERWISE MENTIONED | RED, DCD, BPC | RED, DCD, BPC | REFER DRAWING | |
| | | 2. THE MEASUREMENTS IN THE DRAWING ARE TO BE READ AND NOT MEASURED | PEMA WANGCHUK<br>MANAGER | ROZAL ADHIKARI<br>ELECTRICAL ENGINEER | SCALE: REF DWG / DATE: SEPTEMBER, 2020 | **DWG # 4/6** |
| | DRAWING STATUS: APPROVAL ☐ APPROVED ☐ | 3. ANY DISCREPANCY IN THE DRAWING SHALL BE IMMEDIATELY BROUGHT TO THE NOTICE OF THE DESIGNER | | | | |

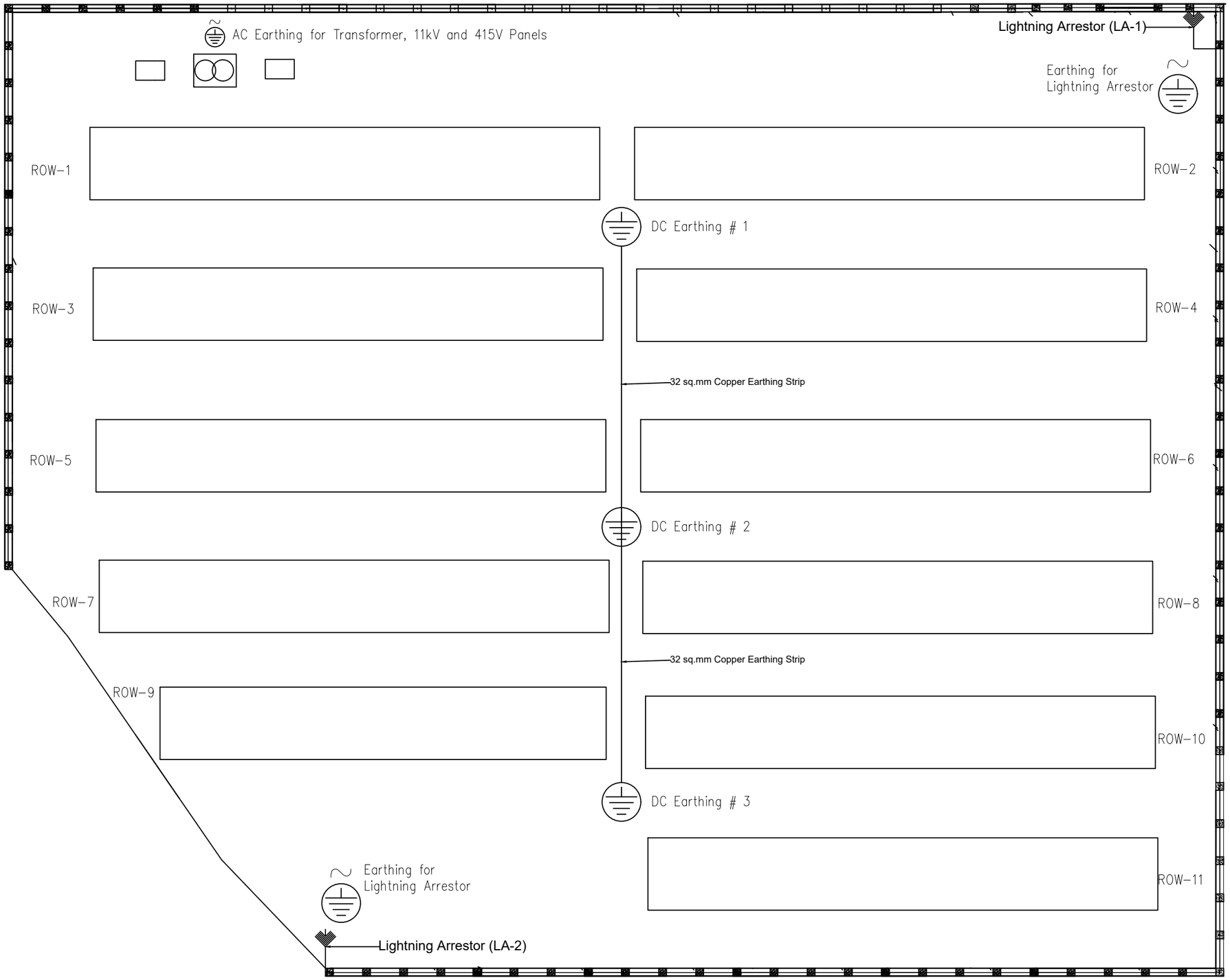


EARTHING AND LIGHTNING ARRESTOR LAYOUT PLAN

| | | | | | | |
|---|---|---|---|---|---|---|
| **BHUTAN POWER CORPORATION LIMITED**<br>DISTRIBUTION SERVICES<br>DISTRIBUTION CONSTRUCTION DEPARTMENT<br>RENEWABLE ENERGY DIVISION | PROJECT TITLE | REFERENCE NOTES | APPROVED BY | DESIGNED BY | DRAWING TITLE | DRAWING NO. |
| | **Supply, Install, Testing & Commissioning of 180kW Grid-Tied Ground-Mounted Solar Power Project at Rubessa, Wangdue** | 1. ALL MEASUREMENTS IN THE DRAWING ARE IN mm UNLESS AND OTHERWISE MENTIONED | RED, DCD BPC | RED, DCD BPC | REFER DRAWING | |
| | | 2. THE MEASUREMENTS IN THE DRAWING ARE TO BE READ AND NOT MEASURED | PEMA WANGCHUK<br>MANAGER | ROZAL ADHIKARI<br>ELECTRICAL ENGINEER | SCALE / DATE | **DWG # 5/6** |
| | DRAWING STATUS: APPROVAL ☐ APPROVED ☐ | 3. ANY DISCREPANCY IN THE DRAWING SHALL BE IMMEDIATELY BROUGHT TO THE NOTICE OF THE DESIGNER | | | REF DWG / SEPTEMBER, 2020 | |

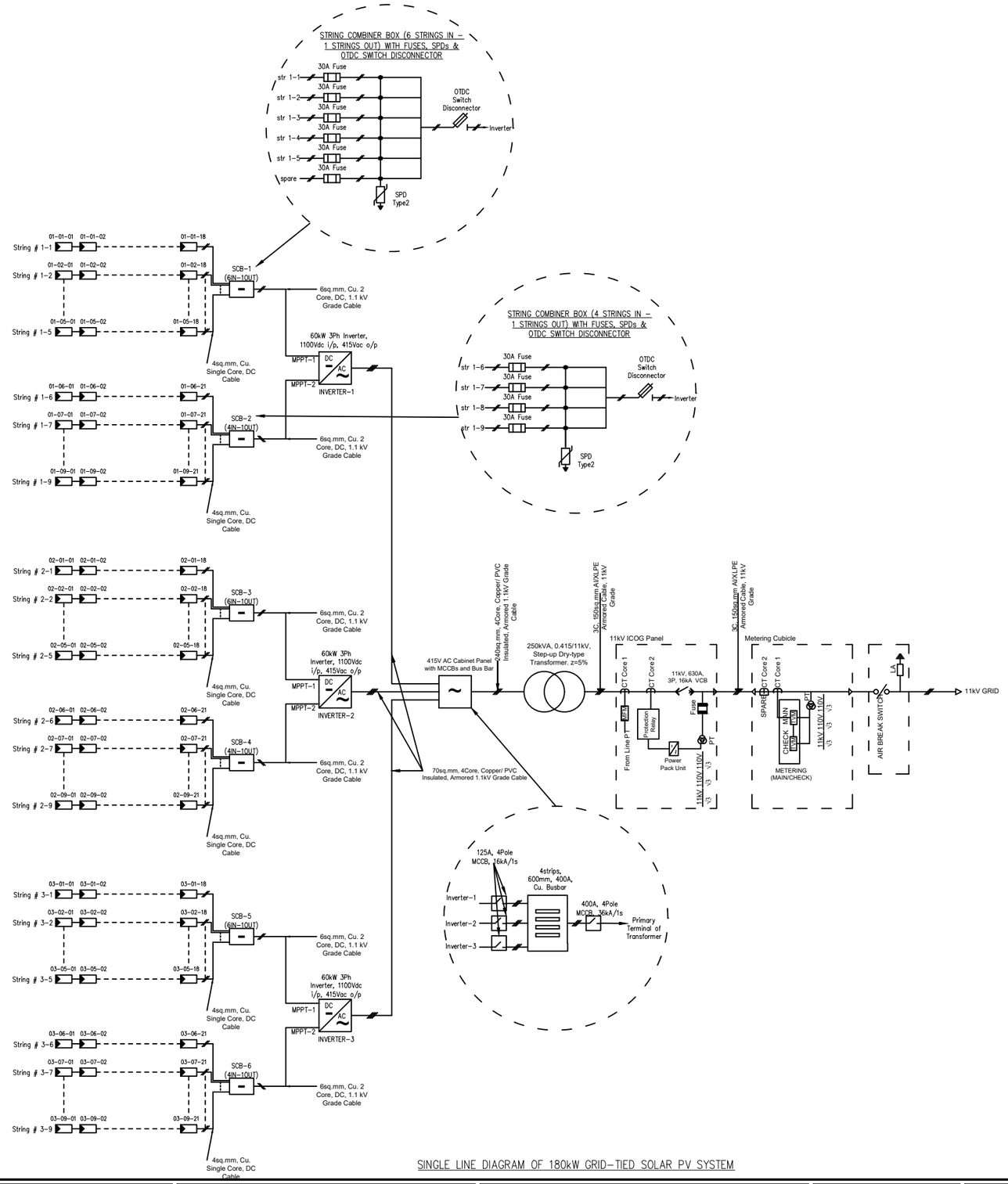


SINGLE LINE DIAGRAM OF 180kW GRID-TIED SOLAR PV SYSTEM

| | | | | | | |
|---|---|---|---|---|---|---|
| **BHUTAN POWER CORPORATION LIMITED**<br>DISTRIBUTION SERVICES<br>DISTRIBUTION CONSTRUCTION DEPARTMENT<br>RENEWABLE ENERGY DIVISION | PROJECT TITLE | REFERENCE NOTES | APPROVED BY | DESIGNED BY | DRAWING TITLE | DRAWING NO. |
| | **Supply, Install, Testing & Commissioning of 180kW Grid-Tied Ground-Mounted Solar Power Project at Rubessa, Wangdue** | 1. ALL MEASUREMENTS IN THE DRAWING ARE IN mm UNLESS AND OTHERWISE MENTIONED | RED, DCD BPC | RED, DCD BPC | REFER DRAWING | |
| | | 2. THE MEASUREMENTS IN THE DRAWING ARE TO BE READ AND NOT MEASURED | PEMA WANGCHUK<br>MANAGER | ROZAL ADHIKARI<br>ELECTRICAL ENGINEER | SCALE / DATE | **DWG # 6/6** |
| | DRAWING STATUS: APPROVAL ☐ APPROVED ☐ | 3. ANY DISCREPANCY IN THE DRAWING SHALL BE IMMEDIATELY BROUGHT TO THE NOTICE OF THE DESIGNER | | | REF DWG / SEPTEMBER, 2020 | |