DRUK HOLDING & INVESTMENTS LTD.

GROUP STANDARD BIDDING DOCUMENT

WORKS

[For value Up to BTN 2 million]

Labour contract for Permanent Power Supply Arrangement to Amochhu Quarantine Center at Phuentsholing under Chukha Dzongkhag (Package A)

SECTION I

CONTENTS

NOTICE INVITING TENDER 4
1. SCOPE OF WORK 4
2. CLARIFICATION TO THE BIDDING DOCUMENT 4
3. DOCUMENTS COMPRISING BID 5
4. BID PRICE 5
5. BID VALIDITY 5
6. BID SECURITY (APPLICABLE ONLY FOR WORKS ABOVE BTN 0.5 MILLION) 5
7. SUBMISSION OF BIDS 5
8. SUBMISSION DEADLINE 6
9. BID OPENING 6
10. EVALUATION OF BID 6
11. EMPLOYER'S RIGHT TO ACCEPT ANY BID, AND REJECT ANY OR ALL BIDS 6
12. AWARD OF CONTRACT 6
13. PERFORMANCE SECURITY 6
14. VARIATION 7
15. EXTENSION OF TIME FOR COMPLETION 8
16. FORCE MAJEURE 8
17. LIQUIDATED DAMAGE 9
18. PAYMENT TERMS 9
19. DEFECT LIABILITY PERIOD 9
20. VENDOR PERFORMANCE MANAGEMENT SYSTEM (*APPLICABLE*) 9
21. TERMINATION 9
22. SUSPENSION 10
23. GOVERNING LAW 10
24. DISPUTE RESOLUTION 10
25. BILL OF QUANTITIES (BOQ) *ANNEXURE- I* 11
SECTION II – BID DATA SHEET 13
SECTION III – BIDDING FORMS 16
FORM 1: BID SECURITY (BANK GUARANTEE) 17
FORM 2: INTEGRITY PACT STATEMENT 19
FORM 3: BIDDER'S INFORMATION FORM 22
FORM 4: POWER OF ATTORNEY 24
FORM 6: BID SUBMISSION FORM 27
FORM 7: BILL OF QUANTITIES 29

FORM 8: PRICE ADJUSTMENT DATA (NOT APPLICABLE) 30
SECTION IV – GENERAL CONDITIONS OF CONTRACT 31
SECTION V – SPECIAL CONDITIONS OF CONTRACT 32
SECTION VI – TECHNICAL SPECIFICATIONS.....37
SECTION VII - CONTRACT FORMS.....38
FORM 1: NOTIFICATION OF AWARD 39
FORM 2: CONTRACT AGREEMENT 40
FORM 3: BANK GUARANTEE FOR CONTRACT PERFORMANCE SECURITY.....42
FORM 4: BANK GUARANTEE FOR ADVANCE PAYMENT 44

NIT No. BPC/DS/DCD/ED/C-17 Date: July 13, 2022

Notice Inviting Tender

Bhutan Power Corporation Limited
Distribution Services/Distribution Construction Department/Electrification Division
Thimphu: Bhutan
Notice Inviting Tenders (NIT)
(Domestic Competitive Bidding)
For

"Labour contract for Permanent Power Supply Arrangement to Amochhu Quarantine Center at Phuentsholing under Chukha Dzongkhag (Package A)" as per the following Terms and Conditions.

Terms and Conditions

1. Scope of Work

The scope of the Work is as under:

Labour contract for Permanent Power Supply Arrangement to Amochhu Quarantine Center at Phuentsholing under Chukha Dzongkhag (Package A):

Name of the work	Estimated Amount (in million Nu.)
Labour contract for Permanent Power Supply Arrangement to Amochhu Quarantine Center at Phuentsholing under Chukha Dzongkhag (Package A)	Nu. 0.67 Million

2. Clarification to the bidding document

Further information can be obtained in writing from

Senior Manager,
Electrification Division,
Distribution Construction Department,
Distribution Services,
Bhutan Power Corporation Limited,
Phone: (975) (2) 321846
Mobile No.: 00975-17608936/17444124
Fax : (975) (2) 321847
electrificationdiv@bpc.bt

not later than **July 22, 2022** from the date of bid submission.

3. Documents comprising bid

3.1.1. The bid must comprise the following documents:

a) Bid Security if applicable as per DHI procurement manual -Works
b) Valid CDB and Trade license
c) Tax clearance
d) Bill of Quantity
e) Drawings and any other relevant documents

4. Bid Price

4.1 All prices shall be quoted in local currency **Bhutanese Ngultrum** (Nu.). The quoted price shall be inclusive of taxes, duties and other levies.

5. Bid Validity

5.1 The bid shall be valid for **60 days** from the date of submission of the bid. In exceptional circumstances, prior to the expiration of the bid validity period, the Employer may solicit the Bidder's consent to an extension of the bid validity period. The request and responses shall be made in writing. A bid valid for a shorter period shall be considered non-responsive.

6. Bid Security (Applicable only for works above BTN 0.5 million)

6.1 The bid shall be accompanied by a bid security of **BTN 13,600.00 (Ngultrum thirteen thousand six hundred and chetrum zero zero) only for package A** in the form of Cash Warrant/Unconditional Bank Guarantee/Banker Cheque/Demand draft in the name of the **Director, Finance & Accounts Services, Bhutan Power Corporation Limited, Thimphu** issued by a reputable Financial Institution enforceable in any Banks in Bhutan.

6.2 The Bid security shall be valid up to **October 27, 2022**.

6.3 The Bid Security is to be submitted as a part of the Bid in a separate sealed envelope. Any Bid not accompanied by bid security of adequate value and validity shall be rejected by Employer as non-responsive.

6.4 The bid security shall be forfeited in the following cases:

a) If the Bidder withdraws the bid after Bid opening during the period of Bid validity;
b) If the Bidder does not accept the correction of the Bid price;
c) In the case of a successful bidder, if the bidder fails to sign the Contract or furnish
d) Performance Security within the specified time limit.

7. Submission of Bids

7.1 The bid including all documents should be duly filled, signed and sealed in an envelope and addressed to and delivered at the following address **Senior Manager, Electrification Division, Distribution Construction Department, Distribution Services, Bhutan Power Corporation Limited, Phone: (975) (2) 321846.**

OR

7.2. The bid in pdf format and password protected shall be submitted electronically at the following address - **Not applicable.**

8. Submission deadline

The deadline for receipt of bid(s) by the Employer is **July 29, 2022 at 13:00 hours**. Bids by electronic means **are not** acceptable.

9. Bid Opening

9.2. The bid(s) will be opened in the presence of bidders or their representatives who choose to attend at **ED Conference hall, Chubachu at 14:15 hours on July 29, 2022.** In case due date of the opening of the bid falls on non-working day, the opening of the bid shall be the next working day at the same time.

10. Evaluation of Bid

10.1. Bids determined to be substantially responsive to the technical specifications and commercial conditions will be evaluated by comparison of their quoted prices. In evaluating the bids, the Employer will determine for each bids the evaluated price by adjusting the priced bid by making any correction for any arithmetical errors as follows:

i. where there is a discrepancy between amounts in figures and in words, the amount in words will govern;
ii. where there is discrepancy between the unit rate and the line item total resulting from multiplying the unit rate by the quantity, the unit rate as quoted shall govern unless in the opinion of the Employer there is an obviously gross misplacement of the decimal point in the unit rate, in which case the line item total as quoted shall govern, and the unit rate shall be corrected.

10.2. To assist in the evaluation, comparison of the Bids, the Employer may, at its discretion, ask any Bidder for a clarification of its Bid. Any clarification submitted by a Bidder that is not in response to a request by the Employer shall not be considered.

11. Employer's Right to Accept Any Bid, and Reject any or All Bids

11.1. The Employer is not bound to accept the lowest bid and reserves the right to accept or reject any or all the bids without assigning any reason whatsoever.

12. Award of Contract

12.1. The Employer shall award the Contract to the Bidder whose offer has been determined to be the lowest evaluated Bid. The Employer shall issue Notification of Award to the successful Bidder. Until a formal Contract is prepared and executed, the Notification of Award shall constitute a binding Contract.

13. Performance Security

13.1. The contractor shall be required to furnish performance security of 10% of the quoted price in the form of cash warrant, demand draft or unconditional Bank Guarantee in the name of **Director, Finance & Accounts Services, Bhutan Power Corporation Limited, Thimphu** issued by a reputable financial institution enforceable in any Banks in Bhutan, which shall be furnished upon issuance of notification of the award. Performance Security shall be valid till the handing-taking over of the works.

13.2. The 10% of the payment shall be retained as retention money till the issuance of No Defects Liability Certificate.

14. Variation

14.1 Introducing a Change

14.1.1. Employer shall have the right to propose, and subsequently require, that the Project Manager order the Contractor from time to time during the performance of the Contract to make any change, modification, addition/alteration or deletion to, in or from the Works in the form, quantity or quality of the Works or any part thereof (hereinafter called "Change"), provided that such Change falls within the general scope of the Works and does not constitute unrelated work and that it is technically practicable, taking into account both the state of advancement of the Works and the technical compatibility of the Change envisaged with the nature of the Works as specified in the Contract. Such changes shall include but not limited to the following:

a. increase or decrease in the quantity of any work included in the Contract;
b. omission or substitution of any work;
c. change the drawings, designs specifications, character or quality or kind of any work;
d. change the levels, lines, positions and dimensions of any part of the Works;
e. execution of additional work of any kind necessary for the completion of the Works;
f. change in any specified sequence, method or timing of construction of any part of the Works.

14.1.2. No such changes shall in any way vitiate or invalidate the Contract. The Contractor shall be bound to carry out the works in accordance with such instructions as may be given to him in writing by the Project Manager. However, the value, if any, of all such Change shall be taken into account in ascertaining the amount of the Contract Price.

14.1.3. The Contractor may from time to time during its performance of the Contract propose to Employer (with a copy to the Project Manager) any Change that the Contractor considers necessary or desirable to improve the quality, efficiency or safety of the Works. BPC may at its discretion approve or reject any Change proposed by the Contractor.

14.1.4. Notwithstanding 14.1.1 and 14.1.2, no change made necessary because of any default of the Contractor in the performance of its obligations under the Contract shall be deemed to be a Change, and such change shall not result in any adjustment of the Contract Price or the Time for Completion.

14.1.5. The Contractor shall be under obligation to agree for the Changes as may be required during the execution of the Contract as per directions of the Project Manager and execute such changes at the same rates included in the Contract, provided the total effect of such changes does not exceed the limit of plus/minus twenty percent (+-20%) of the Contract Price. Such ceiling will however be applicable only for items of work/supply for which rates are provided in the Contract. Notwithstanding the aforesaid provision, the quantities for individual items, if specified in the Contract, can vary to any extent. No claim for revision of rates for any individual item in the Bill of Quantities shall be admissible irrespective of the extent to which the ordered quantity may get revised (+) or (-) during the actual execution of the Works. For change beyond twenty percent (20%) of the Contract Price, the adjustment in the rates for Bill of Quantity items shall be made as per the variation slab hereunder:

Variation in value of work	**Increase in payment for minus variation**	**Decrease in payment for plus variation**
Up to 20%	Nil	Nil
Above 20% & up to 35%	6.00%	3.00%
Above 35% & up to 60%	8.00%	4.00%
Above 60% & up to 100%	10.00%	5.00%
Above 100%	-	5.00%

14.1.6. While working out the value of work for the purpose of variation, the extra items for which new rates have been paid and payment towards price adjustment; and the adjustment towards statutory variations shall not be considered.

15. Extension of time for Completion

15.1. The time for completion shall be extended, if the Contractor is delayed or impeded in the performance of any of its obligations under the Contract for reasons not attributable to the Contractor. The extension shall be for such period as shall be fair and reasonable in all the circumstances and as shall fairly reflect the delay or impediment sustained by the Contractor.

16. Force Majeure

16.1. "Force Majeure" shall mean any unavoidable event beyond the reasonable control of Employer or of the Contractor, as the case may be, and which has impeded the progress of work unreasonably and shall include, without limitation to the following:

a) War, hostilities or warlike operations whether a state of war be declared or not, invasion, act of foreign enemy and civil war;

b) Rebellion, terrorism, revolution, sabotage by persons other than the Contractor's personnel, insurrection, mutiny, usurpation of civil or military government, conspiracy, riot, civil commotion and terrorist acts;

c) Riot, commotion, disorder, strike or lockout by persons other than the Contractor's personnel;

d) Munitions of war, explosive materials, ionizing radiation or contamination by radio-activity, except as may be attributable to the Contractor's use of such munitions, explosives, radiation or radio-activity;

e) Confiscation, nationalization, mobilization, commandeering or requisition by or under the order of any government or de jure or de facto authority or ruler or any other act or failure to act of any government authority;

f) Embargo, import restriction, port congestion, , industrial dispute, shipwreck, shortage or restriction of power supply, epidemics/pandemic, quarantine and plague;

g) Natural catastrophes such as earthquake, hurricane, typhoon, volcanic activity, fire, landslide or flood;

h) The physical conditions or artificial obstructions on the Site.

16.2. In the event that the Contractor is delayed in performing any of their respective obligations under the Contract, and such delay is caused by force majeure, such delay may be and the period of such delay may be added to the time of performance of the obligation delayed.

17. Liquidated Damage

17.1. If the Contractor fails to complete the work within the period specified in the Contract, the Employer shall deduct liquidated damages at the rate of **0.30%** per day for each day of delay to a maximum of 10% of the Contract price.

18. Payment Terms

18.1. At the time of release of payment, tax shall be deducted at source (TDS) from the gross amount of bills as per the Income Tax Act of the Bhutan. The Employer shall furnish necessary TDS Certificate to the Bidders, issued by the Department of Revenue & Customs, RGoB.

19. Defect liability Period

19.1. The defects liability period shall be a period of minimum 6 months.

20. Vendor Performance Management System

20.1. The performance of the Contractor shall be assessed as per the Vendor Performance Management System (VPMS) available in the Employer's website or relevant website for the purpose of assessing the performance of the Contractor.

20.2. The bidders are required to sign the VPMS Acceptance Form attached as **Annexure- II** along with the bid. **In case the bidder does not agree to sign the VPMS Acceptance Form, the bidder shall be liable for rejection**.

21. Termination

21.1. The Employer or the Contractor by giving thirty (30) days written notice of default to the other party may terminate the Contract in whole or in part if the other party causes a fundamental breach of Contract. The terms and conditions of the termination shall be governed by clause no. 14 "Termination" under General Conditions of Contract of the DHI Group Standard Bidding Document for Works.

22. Suspension

22.1. Project Manager at any time may, by notice to the Contractor, order the Contractor to suspend performance of any or all of its obligations under the Contract. The Contractor shall thereupon suspend performance of such obligation until ordered in writing to resume such performance by the Project Manager. During the period of suspension, the Contractor shall not remove from the site any equipment, material or any part of the works or any Contractor's Equipment, without the prior written consent of Employer.

23. Governing Law

23.1. The Contract shall be governed by and interpreted in accordance with the Laws of Bhutan.

24. Dispute Resolution

24.1. All disputes arising in connection with the present Contract shall be resolved through arbitration in accordance with the rules and procedures of the Alternate Dispute Resolution Act 2013.

Bill of Quantities (BoQ) Annexure- I

PRICE SCHEDULE

Package A

Labour Contract for Permanent Power Supply Arrangement to Amochhu Quarantine Center at Phuentsholing under Chukha Dzongkhag

Sl. No.	Description	Unit	Quantity	Rate (Nu.)	Amount (Nu.)
A	**Medium and Low Voltage Lines**				
1	Detail route survey, clearing of jungle/bushes along the RoW, rivers, footpath and roads etc, transportation (both headloading and vehicular) from stores to site, digging of trench (0.5 m width & 1000 mm depth) for direct burial, laying of cable including protective bricks, sand covering of 75mm bedding below and above the cable, erection of cable route marker at a span of 20 meters and joint marker where ever needed, supply of miscealleanous items such as nut & bolts, lugs, etc, to complete the work in full, as per the approved drawing.				
1.1	11kV grade, 3 core x 150 sq.mm (2 Runs)	Mtrs.	258.00		
2	Termination of indoor/outdoor termination kit (heat shrink) and other accessories to complete the work in all respect				
2.1	11kV grade, 3 C x 150 Sq.mm	Set	6.00		
3	Erection of Straight Through Jointing kits				
3.1	11kV grade, 3 C x 150 Sq.mm	Set	1.00		
4	Detail route survey, clearing of jungle/bushes along the RoW, rivers, footpath and roads etc., transportation (both headloading and vehicular) from stores to site, digging of trench (0.5m width & 750mm depth) for direct burial, laying of cable including protective bricks, sand covering of 75mm bedding below and above the cable, erection of cable route marker at a span of 20 meters and joint marker where ever needed, supply of miscealleanous items such as nut & bolts, lugs, etc, to complete the work in full, as per the approved drawing.				
4.1	1.1kV grade, 4Cx300 Sq.mm PVC insulated Al. cable (1 Run)	Mtrs.	229.00		
4.2	1.1kV grade, 4Cx300 Sq.mm PVC insulated Al. cable (2 Runs)	Mtrs.	293.00		
5	Erection of Straight Through Jointing kits				
5.1	1.1kV grade, 4Cx300 Sq.mm PVC insulated Al. cable	Set	2.00		
6	Transportation of materials both head loading and vechicular from stores to site, site clearing, construction of foundations (PCC) for approprite size of the feeder pillar, installation of feeder pillars, earthing works, fittings and other accessories, testing, commissioning and any other associated works.				
6.1	Feeder pillar 4 ways	Set	3.00		
6.2	Feeder pillar 6 ways	Set	2.00		
B	**Substation Construction**				
1	Transportation, Erection, testing & commissioning of Package Substations including installation of GEE slab, earthing connection, cable termination, supply of miscealleanous items such as nut & bolts, lugs, etc, and any other associated works to complete in all respect.				
1.1	11/0.415kV, 750 kVA Package Substation	No	2.00		
2	**Construction of 2 Nos. Package Substation Foundation**				
2.1	Excavation in foundation tranches or drains not exceeding 1.5m in width or area 10sq.m on plan, including dressing & ramming, disposal of surplus soil with in 50m lead & 1.5m lift-Hard soil	cu.m	96.32		
2.2	Providing and laying Hand packed stone filling or soiling with stones (Thickness-150mm)	cu.m	6.40		
2.3	Providing and laying in position plain cement concret excluding cost of concreting and shuttering- All work upto plinth level -1:3:6 (1 cement, 3 sand, 6 graded crushed rock 20mm niminal size)	cu.m	13.87		
2.4	Proving & Fixing centering and shuttering (Formwork),including strutting,propping etc and removal of formwork foundation and plinth etc	sq.m	16.54		

PRICE SCHEDULE

Package A

Labour Contract for Permanent Power Supply Arrangement to Amochhu Quarantine Center at Phuentsholing under Chukha Dzongkhag

Sl. No.	Description	Unit	Quantity	Rate (Nu.)	Amount (Nu.)
2.5	Providing & Laying Random Rubble Masonry with hard stone in foundation & plinth In cement mortar 1:4	cu.m	18.72		
2.6	Providing and laying dry earth bedding, including consolidating each deposited layer by watering, ramming and dressing.	cu.m	7.68		
	Grand Total Price	**Nu.**			
	In words:				

Note:

The quantities mentioned here are indicative and are estimated values. These are subject to change at the time of execution. Payments shall be made based on the actual volume of works at the rate or price schedule of the contract.

Vendor Performance Management System (VPMS) Acceptance Form **Annexure – II**

To,
Senior Manager,
Electrification Division,
Distribution Construction Department,
Distribution Services,
Bhutan Power Corporation Limited

Dear Sir/Madam,

With reference to our Bid dated.....for the work..... against NIT No....., we hereby conform that we have read the provisions in clause 20 regarding the VPMS and we hereby agree to abide by the provisions in the VPMS or do affirm as follows:

1. If our bid is accepted, we agree to be assessed as per the VPMS methodology adopted by Employer.

2. We accept the rating of VPMS depending on our performance and any action hereof.

3. We shall be liable for any breach of this undertaking and non- compliance to the provisions of VPMS.

Sealed and signed

SECTION II – BID DATA SHEET

BID DATA SHEET

The Bid Data Sheet (BDS) contains information and provisions that are specific to a particular bidding process. The Employer must specify in the BDS only information that the Terms & Conditions/Instructions to Bidders (ITB) request to be specified in the BDS. All information shall be provided, and no clause shall be left blank. To facilitate the preparation of the BDS, its clauses are numbered with the same numbers as the corresponding Terms & Conditions /ITB clauses. This guide provides information to the Employer on how to enter all required information, and includes a BDS format that summarizes all information to be provided.

Whenever there is a conflict, the provisions herein shall prevail over those in the Terms & Conditions /ITB.

Terms & conditions/ ITB	**Particulars**
2.1	For Bid clarification purposes, the Employer's address is: Attention: **Senior Manager** Address: **Electrification Division, DCD, DS, BPC, Thimphu** Phone number: **02-321847/+975 17608936/+975 17444124** Electronic mail: electrificationdiv@bpc.bt Bid clarification request will be received on or before: Time : **17:00 Hrs** Date **: July 22, 2022**
3.1	The Bidder shall submit with its Bid the following additional documents: a) Bid Security if applicable as per DHI procurement manual-Works b) Valid CDB and Trade license c) Tax clearance d) Bill of Quantity e) Drawings and any other relevant documents
4.1	The Currencies of Bid shall be **"Bhutanese Ngultrum"** and the prices quoted by the Bidder **"shall not"** be adjustable.
5.1	The Bid validity period shall be **60 days** from the last date of bid submission i.e., up to **September 27, 2022.**
6.1	The Bidder shall furnish a bid security in the amount of **BTN 13,600.00 (Ngultrum thirteen thousand six hundred and chetrum zero zero) only for package A** and shall be valid up to **October 27, 2022** in favor of: **Director, Finance & Accounts Services, Bhutan Power Corporation Limited, Thimphu**. The Bid Security shall be provided in any one of the following forms issued/enforceable by any Financial Institutions in Bhutan: i. An unconditional and irrevocable Bank Guarantee; or ii. A Banker's Cheque/ Cash Warrant; or iii. A Demand Draft;
6.2	The Bid Security shall be valid till: **October 27, 2022**
6.3	Any Bid not accompanied by bid security of adequate value and validity and

	address shall be rejected by Employer as non-responsive.
7	For the purpose of bid submission only, the Employer's address is: **Senior Manager,** **Electrification Division,** **Distribution & Construction Department,** **Distribution Services,** **Bhutan Power Corporation Limited.**
8.1	Bidders **"shall not"** have the option of submitting their Bids electronically. The deadline for the submission of Bid is: **July 29, 2022 at 13:00 Hrs**
9.1	The Bid Opening shall take place at: Venue: **Conference Hall, Electrification Division, Chubachu** Date: **July 29, 2022** Time (BST): **14:15 Hrs**
13.1	The Performance Security shall be provided in any one of the following forms issued by a reputable Financial Institution and enforceable in any Banks in Bhutan: (a) Unconditional bank guarantee Forms; or (b) Demand draft; or (c) Cash warrant; in the name of **Director, Finance & Accounts Services, Bhutan Power Corporation Limited, Thimphu**

SECTION III – BIDDING FORMS

(Form No. 1 to Form No. 8)

Applicable forms from this section shall be submitted by the Bidder along with the Bid

FORM 1: BID SECURITY (BANK GUARANTEE)

Bank Guarantee No. .....

Date.....
To

[Employer's Name and Address]

Dear Sir/ Madam,

In accordance with NIT No. ....., M/s ..... having its Registered/Head Office at ..... (Here-in-after called the 'Bidder') wish to participate in the said Tender for .....*[Name of Package]* .....

As an unconditional and irrevocable bank guarantee against Bid Security for an amount of .....[*insert currency and amount in words and figures**] ..... valid up to.....*[insert date@]* .....is required to be submitted by the Bidder as a condition precedent to participating in the said Tender which amount is liable to be forfeited on the happening of any of the events mentioned in the Bidding Document.

We, the ..... *[Name & address of the Bank]* ..... having our Head Office at ..... (#) ..... guarantee and undertake to pay immediately on demand by the Employer or its authorized representative, the amount of .....*[insert currency and amount in words and figures*]* ..... without any reservation, protest, demand and recourse. Any such demand made by Employer shall be conclusive and binding on us irrespective of any dispute or difference raised by the Bidder.

This Guarantee shall be irrevocable and shall remain valid up to .....(@) ..... If any further extension of this guarantee is required, the same shall be extended to such required period on receiving instructions from M/s..... *[Bidder's Name]* ..... on whose behalf this guarantee is issued.

All rights of Employer under this Guarantee shall be forfeited and the Bank shall be relieved and discharged from all liabilities there under unless a demand or claim is lodged by Employer under this Guarantee against the Bank within thirty (30) days from the above-mentioned expiry date of validity or, from that of the extended date.

In witness where of the Bank, through its authorized officer, has set its hand and stamp on this.....day of.....20.....at.....

WITNESSES: SIGNATURE OF AUTHORIZED SIGNATORY OF THE BANK

1.	1.
……	……
(Signature)	(Signature)

……	……
(Name)	(Name)
……	……
(Official Address)	(Designation)
	Authorized vide
	Power of Attorney No…….
	Date…….
2.	2.
……	……
(Signature)	(Signature)
……	……
(Name)	(Name)
……	……
(Official Address)	(Designation)
	Authorized vide
	Power of Attorney No…….
	Date…….

Note: *(*) Shall be as specified in the BDS.*

(@) The Bid security shall be valid till the date as specified in BDS.

(#) Complete mailing address of the Head Office and issuing branch of the Bank to be given with j no./telephone no. of the contact person

FORM 2: INTEGRITY PACT STATEMENT

INTEGRITY PACT

1: General

Whereas ……..…… representing **Bhutan Power Corporation** here in after referred to as the Employer one part, and (Mr.…… representing the (*name of person, the firm/construction Employer*) on the other part (hereafter referred to as the Bidder) here by execute this agreement as follows:

2. Objectives

Now, therefore, the employer and the Bidder agree to enter into this pre-contract agreement, here in after referred to as integrity pact, to avoid all forms of corruption by following a system that is fair, transparent and free from any influence/ unprejudiced dealings prior to, during and subsequent to the currency of the contract to be entered into, with a view to:

2.1. Enable the Employer to obtain the desired contract at a reasonable and competitive price in conformity to the defined specifications of the works, goods and services; and

2.2 Enable Bidders to abstain from bribing or any corrupt practice in order to secure the contract by providing assurance to them that their competitors shall also refrain from bribing and other corrupt practices and the Employer shall commit to prevent corruption, in any form by their officials by following transparent procedures.

3. Commitments of the Employer

The Employer commits itself to the following:

3.1. The Employer hereby under takes that no official of the Employer, connected directly or indirectly with the Contract, shall demand, take a promise for or accept, directly or through intermediaries, any bribe, consideration, gift, reward favour or any material or immaterial benefit or any other advantage from the Bidder, either for themselves or for any person, organization or third party related to the Contract in exchange for an advantage in the bidding process, bid evaluation, contracting or implementation process related to the Contract.

3.2. The Employer further confirms that its officials have not favored any prospective Bidder in any form that could afford an undue advantage to that particular Bidder during the tendering stage, and shall further treat all Bidders alike.

3.3 All the officials of the Employer shall report to the Chief Executive Officer, Employer, any attempted/completed violation of clauses 3.1 and 3.2.

3.4 Following report on violation of clauses 3.1 and 3.2 by official (s), through any source, necessary disciplinary proceedings, or any other action as deemed fit, including criminal proceedings may be initiated by the Employer and such a person shall be debarred from further dealings related to the Contract process. In such a case while an enquiry is being conducted by the Employer the proceedings under the Contract would not be stalled.

4. Commitments of Bidders

The Bidder commits himself to take all measures necessary to prevent corrupt practices, unfair means and illegal activities during any stage of his bid or during any pre-contract or post-contract

stage in order to secure the Contract or in furtherance to secure it and in particular commits himself to the following:

4.1 The Bidder shall not offer, directly or through intermediaries, any bribe, gift, consideration, reward, favour, commission, fees, brokerage, any materials or immaterial benefit to any official of the Employer, connected directly or indirectly with the bidding process, or to any person, organization or third party related to the contract in exchange for any advantage in the bidding, evaluation, contracting and implementation of the Contract.

4.2 The Bidder further undertakes that he has not given, offered or promised to give, directly or indirectly any bribe, gift, consideration, reward, favour, commission, fees, brokerage, any material or immaterial benefit to any official of the Employer or otherwise in procuring the Contract or forbearing to do or having done any act in relation to the obtaining or execution of the Contract or any other contract with the Employer for showing or forbearing to show favour or disfavor to any person in relation to the Contract or any other contract with the Employer.

4.3 The Bidder shall not collude with other parties interested in the contract to preclude the competitive bid price, impair the transparency, fairness and progress of the bidding process, bid evaluation, contracting and implementation of the contract.

4.4 The Bidder, either while presenting the bid or during pre-contract negotiations or before signing the contract, shall disclose any payments he has made, is committed to or intends to make to officials of the Employer of their family members, agents, brokers or any other intermediaries in connection with the contract and the details of services agreed upon for such payments.

4.5 The Bidder shall not enter into any monetary dealings or transaction, directly, with any tender committee member, and if he does so, the Employer shall be entitled forthwith to rescind the Contract and all other contracts with the Bidder.

5. Sanctions for Violation

The breach of any aforesaid provisions or providing false information by employers, including manipulation of information by evaluators, shall face administrative charges and penal actions as per the existing relevant rules and laws.

The breach of the Pact or providing false information by the Bidder, or any one employed by him, or acting on his behalf (whether with or without the knowledge of the Bidder), or the commission of any offence by the Bidder, or any one, employed by him, or acting on his behalf, shall be dealt with as per the provisions of the Penal Code of Bhutan, 2004, and the Anti – Corruption Act, 2006.

In the event of a breach, the Employer shall also take all or any one of the following actions, wherever required:

5.1 Immediately call off the pre-contract negotiations without giving any compensation to the Bidder. However, the proceedings with the other Bidder(s) would continue.

5.2 Immediately cancel the contract, if already awarded/signed, without giving any compensation to the Bidder.

5.3 Forfeit the Earnest Money/security deposited with the Employer.

5.4 Recover all sums already paid to the Bidder.

5.5 Encash the advance bank guarantee and performance bond /warranty bond, if furnished by the Bidder, in order to recover the payments, already made by the Employer, along with interest.

5.6 Cancel all or any other Contracts with the Bidder.

5.7 Debar the Bidder from entering into any bid from the Employer as per the Debarment Rule.

6. Examination of Books of Accounts

6.1 In case of any allegation of violation of any provisions of this integrity pact or payment of commission, the Employer/authorized persons or relevant agencies shall be entitled to examine the Books of Accounts of the Bidder and the Bidder shall provide necessary information of the relevant financial documents and shall extend all possible help for the purpose of such examination.

7. Monitoring and Arbitration

7.1 The Employer shall be responsible for monitoring and arbitration of IP as per the procurement rules.

8 Legal Actions

8.1 The actions stipulated in this integrity pact are without prejudice to any other legal action that may follow in accordance with the provisions of the extant law in force relating to any civil or criminal proceeding as.

9. Validity

9.1 The validity of this integrity pact shall cover the tender process and extend until the completion of the contract to the satisfaction of both the employer and the Bidder.

9.2 Should one or any provision of this pact turn out to be invalid, the remainder of this pact remains valid. In this case, the parties shall strive to come to an agreement to their original intentions.

We, hereby declare that we have read and understood the clauses of this agreement and shall abide by it. Further, the information provided in this agreement is true and correct to the best of our knowledge and belief.

The parties here by sign this Integrity pact at (*place*)…….. on (*date)*……

…….. …….

EMPLOYER BIDDER

<u>Witness</u>

1……... 1…….

FORM 3: BIDDER'S INFORMATION FORM

[The Bidder shall fill in this Form in accordance with the instructions indicated below. No alterations to its format shall be permitted and no substitutions shall be accepted.] ***Not Applicable***

Date: .....*[insert date of Bid submission]* .....

NIT No.: .....

1.	Bidder's Legal Name:
2.	In the case of a Joint Venture (JV) legal name of each member of the Joint Venture:
3.	Bidder's or each member of JV's Country of Registration:
4.	Bidder's or Each member of JV's Year of Registration:
5.	Bidder's or Each member of JV's Legal Address in Country of Registration:
6.	Bidder's or Lead member of JV's Local Address in Bhutan (if any):
7.	Bidder's or Each member of JV's Website Address:
8.	Bidder's or Each member of JV's Business Activities:
9.	Bidder's or Lead member of JV's Authorized Representative Name: Designation: Address: Telephone: E-mail Address:
10.	Bidder's or Lead member of JV's Authorized Representative in Bhutan (if any) Name of the Employer or firm: Name of the contact person: Designation: Address:

	Telephone: E-mail Address: Services to be provided by the local representative:
11.	Status of the Bidder (check the box as applicable): ● Bidding Company ● Lead Member of the Joint Venture ● Agent of the Foreign Bidder
12.	Attached are copies of the following original documents: *[check the box(es) of the attached original documents]* ● Tax Clearance Certificate of Bidder named in 1or 2 above (applicable for Bhutanese Bidders) ● Trade License of Bidder named in 1or 2 above (applicable for Bhutanese Bidders) ● Certificate of Incorporation or Registration of Bidder named in 1or 2 above ● Any other certificate to support the legal entity of the Bidder named in 1or 2 above

Date: Signature.....

Place: Name.....

Designation.....

Seal.....

FORM 4: POWER OF ATTORNEY

KNOW ALL MEN BY THESE PRESENTS THAT WE, …… *[insert name of the Bidder]* ……. an Employer incorporated under the ……. *[insert relevant statute of the country of incorporation]* ……. and having its registered office at …… *[insert address]* ……. (Hereinafter referred to as the "Bidder") having been authorized by the Board of Directors of the Employer, inter alia, to execute contracts in the name of and for and on behalf of the Employer. I ……. *[insert name of the person giving the power of attorney]* ……. presently holding the position of ……... *[insert designation of the person giving the power of attorney]* …… in the Employer do hereby constitute, appoint and authorize Mr.…… [*insert name, designation and residential address of the person to whom the power of attorney is being given]* …… as our true and lawful attorney to do in our name and on our behalf all such acts, deeds, things necessary and incidental to submission of our Bid against NIT No. ……..., floated by Employer. I hereby further authorize the above attorney for signing and submission of the Bid and all other documents, information related to the Bid including undertakings, letters, certificates, declarations, clarifications, acceptances, guarantees, any amendments to the Bid and such documents related to the Bid, and providing responses and representing us in all the matters before Employer in connection with the Bid for the said NIT till the completion of the bidding process.

I accordingly hereby nominate, constitute and appoint above named …… severally, as my lawful attorney to do all or any of the acts specifically mentioned immediately herein above.

WE do hereby agree and undertake to ratify and confirm whatever the said Attorney shall lawfully do or cause to be done under and by virtue of this power of Attorney and the Acts of Attorney to all intents and purposes are done as if I had done the same on behalf of the Employer if these presents had not been made.

IN WITNESS whereof I, ……... have executed these presents this the ……. day of ……at ……...

EXECUTANT

Signature……...……

Name: .....

Designation…….…….……...

ACCEPTED:

Signature of Attorney...…….

Name: .....……

Designation…….....……...

Signature of the Attorney Attested

…..……

EXECUTANT

Name…….

Designation……..…

Office Seal……

Note: *The Power of Attorney should be notarized as per applicable legal provisions in the country of the Bidder*

FORM 5: DEVIATION SCHEDULE (IF APPLICABLE)

NIT No: _____

To:

[Employer's relevant official, name and address]

Sir/Madam,

The following are the deviations and variations from and exceptions to the terms, conditions and specifications of the Bidding Documents for procurement of….....*[insert brief description of works]* …….... These deviations and variations are exhaustive. We are furnishing below the cost of withdrawal for the deviations and variations stated in this Form. We shall withdraw the deviations proposed by us in this Form at the cost of withdrawal indicated herein, failing which our Bid may be rejected and bid security forfeited.

We confirm that except for the deviations and variations stated in this Form to our Bid, the entire work shall be performed as per specifications and conditions of the Bidding Documents without any extra cost to Employer, irrespective of any mention to the contrary anywhere else in the Bid, failing which our Bid may be rejected and Bid security forfeited.

Further, we agree that additional condition, deviation, if any, found in the Bidding Documents other than those stated in this Form, save those pertaining to any rebates offered, shall not be given effect to.

Section / Clause No	Page No.	Statement of Deviations	Cost of withdrawal

Date: (Signature).....

Place: (Name).....

(Designation).....

(Seal).....

Note: Continuation sheets of like size and format may be used and annexed to this Form if required.

FORM 6: BID SUBMISSION FORM

Date:

Invitation no……and Title of

Contract…….....

To:

…….,

……..……,

…….,

…….,

Employer

[*Address*]

We, the undersigned, declare that:

a) Having examined all the Bidding Documents (with reference ITB 10), including addenda *[insert list]*, we offer to execute the ……. in accordance with the Conditions of Contract accompanying this Bid for the Contract Price of

BTN……..*In figures),*

Ngultrums……..

. ……...…*(In words).*

b) This Bid and your written acceptance of it shall constitute a binding Contract between us. We understand that you are not bound to accept the lowest or any Bid you receive.

c) We hereby confirm that this Bid complies with the Bid validity and Bid Security required by the Bidding Documents and specified in the Bidding Data Sheet.

d) We, including any subcontractors for any part of the Contract, have nationalities from eligible countries in accordance with ITB Clause 7;

e) We have no conflict of interest in accordance with ITB sub clause 5.2;

f) Our firm, its affiliates or subsidiaries—including any subcontractors for any part of the Contract—has not been declared ineligible under the laws or official regulations of Bhutan, in accordance with ITB Clause 6 and other relevant clauses.

g) Commissions or gratuities, if any, paid or to be paid by us to agents relating to this Bid, and to contract execution if we are awarded the contract, are listed below:

Name & address of agent	Amount & Currency	Purpose of commission or gratuity
Bhutan Power Corporation Limited		

** If none, please state none*

h) Our duly executed Integrity Pact Statement is attached herewith.

i) We accept the vendor performance management system.

AUTHORIZED SIGNATURE: _____ (AFFIX LEGAL STAMP)

Name and title of signatory: ……

Name of Bidder: ……..

Address: ……..

FORM 7: BILL OF QUANTITIES

[*The objectives of the Bill of Quantities are:*[1]

a) *To provide sufficient information on the quantities of Works to be performed to enable Bids to be prepared efficiently and accurately; and*

b) *When a Contract has been entered into, to provide a priced Bill of Quantities for use in the periodic valuation of Works executed.*

In order to attain these objectives, Works should be itemized in the Bill of Quantities in sufficient detail to distinguish between the different classes of Works, or between Works of the same nature carried out in different locations or in other circumstances, which may give rise to different considerations of cost. Consistent with these requirements, the layout and content of the Bill of Quantities should be as simple and brief as possible.

Daywork Schedule

A Daywork Schedule should be included only if the probability of unforeseen work, outside the items included in the Bill of Quantities, is high. To facilitate checking by the Employer of the realism of rates quoted by the Bidders, the Daywork Schedule should normally comprise the following:

a) *A list of the various classes of labour, materials and Constructional Plant for which basic Daywork rates or prices are to be inserted by the Bidder, together with a statement of the conditions under which the Contractor shall be paid for work executed on a Daywork basis.*

b) *Nominal quantities for each item of Daywork, to be priced by each Bidder at Daywork rates as Bid. The rate to be entered by the Bidder against each basic Daywork item should include the Contractor's profit, overheads, supervision and other charges.*

Provisional Sums

A general provision for physical contingencies (quantity overruns) may be made by including a provisional sum in the Summary Bill of Quantities. Similarly, a contingency allowance for possible price increases should be provided as a provisional sum in the Summary priced Bill of Quantities. The inclusion of such provisional sums often facilitates budgetary approval by avoiding the need to request periodic supplementary approvals as the future need arises. Where such provisional sums or contingency allowances are used, the Special Conditions of Contract should state the manner in which they shall be used, and under whose authority (usually the Project Manager's) they shall be used.

[1] In lump sum contracts the Bill of Quantities is prepared only for information and is not contractual. In such cases, the contractual document prepared by the Bidder shall be a Schedule of Activities.

FORM 8: PRICE ADJUSTMENT DATA (NOT APPLICABLE)

NIT No: ……

To,

[Name, Designation and address of Employer]

Dear Sir,

We hereby furnish the relevant details pertaining to the price adjustment provisions in your specifications and documents.

Sl No.	Variables	Name of published index and its origin	Value of indices as on 30 days prior to date set for Opening of bids.
	Material		
	Labour		

Date: Signature.....

Place: Name.....

Designation.....

Seal.....

Note:

1. *Bidders shall note that it is mandatory to furnish the values of various indices and name, source & origin of the published indices, wherever called for in the bidding document. Bidders are also required to mention whether the indices are monthly average, weekly average or as applicable.*

** Continuation sheets of like size & format shall be used, if required, in case number of currencies is more than one.*

*** Continuation sheets of like size and format may be used, if countries of origin of expatriate labour are more than one.*

SECTION IV – GENERAL CONDITIONS OF CONTRACT

TABLE OF CONTENTS

1. GENERAL PROVISIONS 5
   1.1. DEFINITIONS 5
   1.2. INTERPRETATION 7
   1.3. NOTICES 8
   1.4. GOVERNING LAW AND LANGUAGE 9
   1.5. ASSIGNMENT 9
   1.6. FRAUD AND CORRUPTION 9
   1.7. JOINT VENTURE 10
2. THE EMPLOYER 10
   2.1. ACCESS TO SITE 10
   2.2. EMPLOYER REPRESENTATIVE 11
   2.3. EMPLOYER'S RESPONSIBILITIES 12
3. THE CONTRACTOR 12
   3.1. RESPONSIBILITY OF THE CONTRACTOR 12
   3.2. PERFORMANCE SECURITY 13
   3.3. CONTRACTOR'S REPRESENTATIVE AND CONSTRUCTION MANAGER 14
   3.4. OPPORTUNITIES FOR OTHER CONTRACTORS 15
   3.5. EMERGENCY WORK 16
   3.6. PROGRESS REVIEW MEETINGS 16
   3.7. PROTECTION OF THE ENVIRONMENT 16
   3.8. SITE REGULATIONS AND SAFETY 16
   3.9. SITE CLEARANCE 17
   3.10. WATCHING AND LIGHTING 17
   3.11. EXPLOSIVES 17
   3.12. TEMPORARY UTILITIES 17
   3.13. WORKING HOURS 17
   3.14. PROGRAM OF PERFORMANCE 18
   3.15. PROGRESS OF PERFORMANCE 18
4. SUBCONTRACTING 18
5. CONTRACTOR'S STAFF/LABOUR AND EQUIPMENT 19
   5.1. KEY PERSONNEL 19
   5.2. LABOUR 19
   5.3. CONTRACTOR'S EQUIPMENT 20
6. PLANT, MATERIAL AND WORKMANSHIP 21
   6.1. METHODOLOGY OF CONSTRUCTION & EQUIPMENT MOBILIZATION 21
   6.2. TEST AND INSPECTION 21
7. WORK EXECUTION 23
   7.1. BENCHMARK 23
   7.2. CONTRACTOR'S SUPERVISION 23
   7.3. QUALITY ASSURANCE PROGRAM 23
   7.4. PROGRESS REPORT 23
   7.5. MATERIALS OBTAINED FROM EXCAVATION 23
8. COMMENCEMENT, DELAYS AND SUSPENSION 24

8.1. TIME FOR COMMENCEMENT AND COMPLETION 24
8.2. MANNER OF EXECUTION 24
8.3. EXTENSION OF TIME FOR COMPLETION 25
8.4. LIQUIDATED DAMAGES 26

9. TAKING OVER 26

9.1. TEST ON COMPLETION 26
9.2. TAKING OVER OF WORKS 27
9.3. OPERATING AND MAINTENANCE MANUALS 28

10. DEFECTS 28

10.1. CORRECTION OF DEFECTS 28
10.2. UNCORRECTED DEFECTS 28
10.3. DEFECT LIABILITY 28

11. MEASUREMENT AND VALUATION 29

12. VARIATIONS AND ADJUSTMENTS 30

12.1. CONTRACT PRICE ADJUSTMENT 30
12.2. CHANGE IN WORKS 32
12.3. VARIATIONS IN CONTRACT 33
12.4. ADJUSTMENT OF THE CONTRACT PRICE 33
12.5. DAY WORK 35
12.6. RECORD OF COSTS 35
12.7. CHANGE IN LAWS AND REGULATIONS 35

13. CONTRACT PRICE AND PAYMENT 36

13.1. CONTRACT PRICE 36
13.2. ADVANCE PAYMENT 36
13.3. TERMS OF PAYMENT 37
13.4. TAXES AND DUTIES 37
13.5. RETENTION MONEY 38

14. TERMINATION 39

14.1. TERMINATION FOR EMPLOYER'S CONVENIENCE 39
14.2. TERMINATION FOR CONTRACTOR'S DEFAULT 39
14.3. TERMINATION BY CONTRACTOR 41
14.4. PAYMENT UPON TERMINATION 41
14.5. SUSPENSION 42

15. CARE OF THE WORKS AND INDEMNITIES 43

15.1. PROTECTION OF WORKS 43
15.2. COPYRIGHT 43
15.3. CONFIDENTIAL INFORMATION 43
15.4. PATENT INDEMNITY 44
15.5. LIMITATIONS OF LIABILITY 45
15.6. INDEMNIFICATION EMPLOYER 45

16. EXCEPTIONAL EVENT (FORCE MAJEURE) 46

17. INSURANCE 47

18. CLAIMS 48

18.1. CONTRACTOR'S CLAIMS 48

18.2. CLAIMS TOWARDS IDLING OF RESOURCES....49
18.3. EARLY WARNING....50

19. DISPUTES AND ARBITRATIONS....50

19.1. AMICABLE SETTLEMENT....50
19.2. DISPUTE RESOLUTION....50

1. General Provisions

1.1. Definitions

1.1.1. The following words and expressions shall have the meaning hereby assigned to them except where the context otherwise requires.

(i) Affiliate means business concerns, organizations or individuals that control each other or that are controlled by a common third party. Control may include shared management or ownership; common use of facilities, equipment and resources; or family interests.

(ii) Employer means the Employer including its legal successors and permitted assigns. The term "Employer" and "Employer" are synonymous.

(iii) Bid means an offer to execute Works in accordance with the terms and conditions set out in the bidding documents inviting such offers. The term "tender" is synonymous with the term "bid".

(iv) Bid Data Sheet (BDS) means the proforma sheet, which contains data and information specific to a particular work.

(v) Bidder means an eligible individual, firm, legal entity or joint venture that participates in a competitive bidding process governed by the bidding documents.

(vi) Bidding Document means the set of documents sold or issued by Employer to potential Bidders in which the specifications, terms and conditions of the proposed procurement are prescribed. The terms "Bidding Documents", "Tender Documents" and "Bid Documents" are synonymous.

(vii) Bill of Quantities (BoQ) means summary of the quantities and unit prices of the items of work proposed and agreed under the contract.

(viii) Contract means formal agreement(s) in writing entered into simultaneously between Employer and the Contractor on mutually agreed terms and conditions including the Contract Documents and amendments thereto pursuant to Notification of Award issued by Employer and accepted by the Contractor and which are in compliance with all the relevant provisions of the Governing Law of the Contract as per GCC 1.4.

(ix) Contract Document means the documents referred in Contract Agreement.

(x) Contract Price means the price payable to the Contractor as specified in the Contract Agreement, subject to such additions and adjustments thereto or deductions therefrom as may be made pursuant to the provisions of the Contract till the completion of the contract, the price so adjusted shall be termed as executed/final Contract Price.

(xi) Contractor means an individual or legal entity whose Bid to perform the Contract has been accepted by Employer and is named as such in the Contract Agreement, and includes the legal successors or permitted assigns of the Contractor.

(xii) Contractor's Representative means any person nominated by the Contractor and approved by Employer in the manner provided in GCC 3.3 hereof to perform the duties assigned by the Contractor.

(xiii) Contractor's Equipment means all plant, facilities, equipment, machinery, tools, apparatus, appliances or things of every kind required for erection, completion and maintenance of works that are to be provided by the Contractor, but does not include plant, equipment, materials or other things intended to form or forming part of the works.

(xiv) Day means calendar day of the Gregorian calendar.

(xv) Day works are varied work inputs subject to payment on a time basis for the Contractor's employees and Equipment, in addition to payments for associated Materials and Plant.

(xvi) Defect Liability Period means the period of validity of the warranties given by the Contractor commencing at completion of the Works or a part thereof, if separate completion of the Works for such part has been provided in the Contract, during which the Contractor is responsible for defects with respect to the Works (or the relevant part thereof) as provided in GCC 10.3 hereof.

(xvii) The Defects Liability Certificate is the certificate issued by the Employer upon correction of defects by the Contractor.

(xviii) Drawings include calculations and other information provided or approved by the Employer for the execution of the Contract.

(xix) Effective Date means the date of Notification of Award/ Work Order/Contract Signing and from which the time for completion shall be determined.

(xx) Foreign Bidder shall mean any Bidder having nationality of any country other than Bhutan.

(xxi) Joint Venture or "JV" means a joint venture, association or consortium of not more than four (4) legal entities that pool their resources and skills to undertake a large or complex Contract in the role as a Contractor, with all legal entities (members in the JV) being legally liable, jointly and severally, through a joint venture agreement between the members of the JV for the execution of the Contract in the event of a member's withdrawal.

(xxii) Notification of Award (NoA) means the letter or order issued by Employer conveying the acceptance of the Bid of the successful Bidder subject to such terms and conditions as may have been stated therein.

(xxiii) Local Transportation shall include loading, unloading, handling of plant, equipment and materials at the port of entry in India/airport in Bhutan; storage at the port/airport, if required, and subsequent transportation from the port of entry/airport up to the Site.

(xxiv) Month means calendar month of the Gregorian calendar.

(xxv) Materials are all supplies, including consumables, used by the Contractor for incorporation in the Works.

(xxvi) Party means the Employer or the Contractor, as the context requires, and "Parties" means both of them.

(xxvii) Project Manager means the person appointed by Employer in the manner provided in GCC hereof and named as such in the SCC to perform the duties delegated by Employer.

(xxviii) Plant is any integral part of the Works that shall have a mechanical, electrical, chemical or biological function.

(xxix) Site is the area defined as such in the SCC.

(xxx) Subcontractor means any person named in the Contract as a subcontractor, or any person appointed by the Contractor as a subcontractor or designer, for a part of the works; and the legal successors in title to each of these persons.

(xxxi) Time for Completion means the time within which completion of the Works as a whole (or of a part of the Works where a separate Time for Completion of such part has been prescribed) is to be attained in accordance with the stipulations in the SCC and the relevant provisions of the Contract.

(xxxii) Technical Specifications means specifications of the Works incorporated in the bidding documents and forming part of the contract and includes any modification or amendment thereto or any addition thereto or any deduction therefrom, as may be made with the mutual agreement of the Employer and Contractor.

(xxxiii) Temporary Works means all temporary works of every kind (other than Contractor's Equipment) required on Site for the execution of the Works.

(xxxiv) Works shall mean the total work to be executed in accordance with the Contract or part(s) thereof, as the case may be, and shall include all extra or additional, altered or substituted works or temporary/enabling works and urgent works as required for performance of the Contract.

(xxxv) A Variation means any change to the Works, which is instructed as a variation under Clause.

1.2. Interpretation

1.2.1. In the Contract, except where the context requires otherwise:

a. Words indicating one gender shall include all genders;
b. Words indicating the singular also include the plural and words indicating the plural also include the singular;
c. Provisions including the word "agree," "agreed," or "agreement" require the agreement to be recorded in writing;
d. "Written" or "in writing" means hand-written, type-written, printed or electronically made, and resulting in a permanent record;
e. "may" means that the party/person referred to has the choice whether to act or not in the matter referred to; and
f. "shall" means that the party/person referred to has an obligation under the Contract to perform the duty referred to.

1.2.2. "Month" and "Year" and all dates shall be reckoned according to the Gregorian calendar.

1.2.3. A "law" shall be construed as a reference to such law including its amendments or reenactments from time to time.

1.2.4. A "person" shall be construed as a reference to any person, firm, Employer, corporation, society, trust, government, or agency of a government or any association or partnership (whether or not having separate legal personality) of two or more of the above and a person shall be construed as including a reference to its successors, permitted transferees and permitted assigns in accordance with their respective interests.

1.2.5. The words "hereof" or "herein" if and when used in the Contract Documents shall mean a reference to the Contract Documents of this Contract.

1.2.6. Incoterms

a) Unless inconsistent with any provision of the Contract, the meaning of any trade term, when used, and the rights and obligations of Parties thereunder shall be governed by

the rules prescribed in the current edition of Incoterms specified in the SCC and published by the International Chamber of Commerce in Paris, France.

1.2.7. Amendment

a) No amendment or other variation of the Contract shall be effective unless it is in writing, is dated, expressly refers to the Contract, and is signed by duly authorized representatives of Employer and the Contractor.

1.2.8. Non-waiver

a) Subject to 1.2.8(b) below, no relaxation, forbearance, delay or indulgence by either party in enforcing any of the terms and conditions of the Contract or the granting of time by either party to the other shall prejudice, affect or restrict the rights of that Party under the Contract, nor shall any waiver by either Party of any breach of Contract operate as waiver of any subsequent or continuing breach of Contract;

b) Any waiver of a party's rights, powers or remedies under the Contract must be in writing, dated and signed by an authorized representative of the party granting such waiver, and must specify the right and the extent to which it is being waived.

1.2.9. Severability

a) If any provision or condition of the Contract is prohibited or rendered invalid or unenforceable, such prohibition, invalidity or unenforceability shall not affect the validity or enforceability of any other provisions and conditions of the Contract.

1.2.10. Entire Agreement

a) The Contract constitutes the entire agreement between Employer and the Contractor, with respect to the subject matter of Contract, and supersedes all communications, negotiations and agreements (whether written or oral) of the Parties with respect thereto made prior to the date of Contract.

1.3. Notices

1.3.1. Notices shall be deemed to include any approvals, consents, instructions, orders, determinations and certificates to be given under the Contract.

1.3.2. Unless otherwise stated in the Contract, all notices to be given under the Contract shall be in writing, and shall be sent by personal delivery, or courier, or post, or electronic mail, writing to the address specified in the SCC.

1.3.3. Any notice sent by post or courier shall be deemed (in the absence of evidence of earlier receipt) to have been delivered ten (10) days after dispatch. In proving the fact of dispatch, it shall be sufficient to show that the envelope containing such notice was properly addressed, stamped and conveyed to the postal authorities or courier service for transmission by airmail or special courier.

1.3.4. Any notice delivered personally or electronic mail shall be deemed to have been delivered on date of its dispatch. Either Party may change its address at which notices are to be received and/or sent by giving ten (10) days' notices to other Party in writing.

1.4. Governing Law and Language

1.4.1. The Contract shall be governed by and interpreted in accordance with the laws of the Kingdom of Bhutan.

1.4.2. The Contractor shall, in all matters arising in the performance of the Contract, comply in all respects, give all notices and pay all fees required by the provisions of any statute, ordinance or other law or any regulation or by-law of any duly constituted authority of the Kingdom of Bhutan.

1.4.3. The Contractor shall indemnify and hold Employer harmless from and against any and all liabilities, damages, claims, fines, penalties and expenses of whatever nature arising or resulting from the violation of such laws by the Contractor or its personnel including its Sub-Contractors and their employees.

1.4.4. The Contract, as well as all correspondence and documents relating to the Contract exchanged by the Contractor and Employer, shall be written in English. Supporting documents and printed literature that are part of the Contract may be in another language provided they are accompanied by an accurate translation of the relevant passages in English, in which case, for purposes of interpretation of the Contract, the translation shall govern.

1.4.5. The Contractor shall bear all costs of translation to the governing language and all risks of the accuracy of such translation, for documents provided by the Contractor.

1.5. Assignment

1.5.1. The Contractor shall not, without the express prior written consent of Employer, assign to any third party the Contract or any part thereof, or any right, benefit, obligation or interest therein or there under, except that the Contractor shall be entitled to:

1.5.2. Assign either absolutely or by way of charge any monies due and payable to it or that may become due and payable to it under the Contract in favour of its bankers;

1.5.3. Assign to the insurers (in cases where the insurers have discharged the Contractor's loss or liability) of the Contractor's right to obtain relief from any other liable party.

1.6. Fraud and Corruption

1.6.1. If Employer determines that the Contractor and/or any of its personnel, or its agents, or its subcontractors, and/or their employees has engaged in corrupt, fraudulent, collusive coercive, or obstructive practices, in competing for or in executing the Contract, then Employer may, after giving fourteen (14) days' notice to the Contractor, terminate the Contract and expel him from the site, and the provisions of GCC 14 shall apply as if such expulsion had been made under 14.2.1.

1.6.2. For the purposes of this sub-clause,

a) "Corrupt practice" is the offering, giving, receiving or soliciting, directly or indirectly, of anything of value to influence improperly the actions of another party;

b) "Fraudulent practice" is any act or omission, including a misrepresentation, that knowingly or recklessly misleads, or attempts to mislead, a party to obtain a financial or other benefit or to avoid an obligation;

c) "Collusive practice" is an arrangement between two or more parties designed to achieve an improper purpose, including to influence improperly the actions of another party;

d) "Coercive practice" is impairing or harming, or threatening to impair or harm, directly or indirectly, any party or the property of the party to influence improperly the actions of a party;

e) "Obstructive practice" is

a. Deliberately destroying, falsifying, altering or concealing of evidence material during an investigation or making false statements to investigators in order to materially impede any investigation into allegations of a corrupt, fraudulent, coercive or collusive practice; and/or threatening, harassing or intimidating any party to prevent it from disclosing its knowledge of matters relevant to the investigation or from pursuing the investigation, or

b. Acts intended materially to impede the exercise of the inspection rights of Employer or any organization or person appointed by Employer.

1.7. Joint Venture

1.7.1. If the Contractor is a joint venture, all such parties shall be jointly and severally bound to Employer for the fulfilment of the obligations under the Contract and shall designate one of such firms/parties to act as a leader with authority to bind the joint venture. The composition or the constitution of the joint venture shall not be altered without the prior consent of Employer.

2. The Employer

2.1. Access to Site

2.1.1. Employer shall give access to and possession of all parts of the Site including special and/or temporary rights-of-way to the Contractor, free from all encumbrances. Employer reserves the right to hand over the Site in parts progressively to the Contractor. The Contractor shall be required to take possession of the Site without any undue delay and commence the Works on the released fronts in parts without any reservation whatsoever.

2.1.2. The Contractor shall allow the Project Manager and any person authorized by the Employer access to the Site and to any place where work in connection with the Contract is being carried out or is intended to be carried out.

2.2. Employer Representative

2.2.1. Project Manager

a) If the Project Manager is not named in the Contract, then within fourteen (14) days of the Effective Date, Employer shall appoint and notify the Contractor in writing of the name of the Project Manager. Employer may from time to time appoint some other person as the Project Manager in place of the person previously so appointed, and shall give a notice of the name of such other person to the Contractor without delay. Employer shall take reasonable care to see that no such appointment is made at such a time or in such a manner as to impede the progress of Works. The Project Manager shall represent and act for Employer at all times during the currency of the Contract and carry out duties and responsibilities specified in the Contract. All notices, instructions, orders, certificates, approvals and all other communications under the Contract shall be given by the Project Manager, except as herein otherwise provided.

b) The Project Manager's representative shall be appointed by and be responsible to the Project Manager and shall carry out such duties and exercise such authority as may be delegated to him by the Project Manager under c) Project Manager's representative shall have no authority to relieve the Contractor of any of his duties or obligations under the Contract except as expressly provided hereunder or elsewhere in the Contract, nor to order any work involving delay or any extra payment by Employer, nor to make any variation in the Works.

c) The Project Manager may, from time-to-time delegate to the Project Manager's representative any of the powers and authorities vested in the Project Manager and he may at any time revoke such delegation. Any communication issued by the Project Manager's representative to the Contractor in accordance with such delegation shall have the same effect as though it had been issued by the Project Manager, provided that:

d) Any failure on the part of the Project Manager's representative to disapprove any work or materials shall not prejudice the authority of the Project Manager thereafter to disapprove such work or materials and to give instructions for the removal or for the rectification thereof;

e) If the Contractor questions any communication of the Project Manager's representative, he may refer the matter to the Project Manager who shall confirm, reverse or vary the contents of such communication.

f) The Project Manager or his representative may appoint any number of persons to assist the Project Manager's representative in carrying out his duties. Such assistants shall have no authority to issue any instructions to the Contractor save in so far as such instructions may be necessary to enable them to carry out their duties and to

secure their acceptance of materials, plant, equipment and machinery or workmanship as being in accordance with the Contract, and any instructions given by any of them for those purposes shall be deemed to have been given by the Project Manager's representative.

2.3. Employer's Responsibilities

2.3.1. Employer shall ensure the accuracy of all information and/or data to be supplied by Employer, except when otherwise expressly stated in the Contract.

2.3.2. Employer shall be responsible for acquiring and providing legal and physical possession of the site and access thereto, and for providing possession of and access to all other areas reasonably required for the proper execution of the Contract, including all requisite rights of way.

2.3.3. If requested by the Contractor, Employer shall try its best to assist the Contractor in obtaining in a timely and expeditious manner all permits, approvals and/or licenses necessary for the execution of the Contract from all government authorities or public service undertakings that such authorities or undertakings require the Contractor or subcontractors or the personnel of the Contractor or subcontractors, as the case may be.

2.3.4. If so specified in the SCC, the Employer shall provide qualified personnel; shall supply and make available all raw materials, utilities, lubricants, chemicals, catalysts, other materials and facilities and shall perform work and services of whatsoever nature to enable the Contractor to complete the Works at or before the time specified in the program furnished by the Contractor under 3.143.14 hereof and in the manner thereupon specified or as otherwise agreed upon by Employer and the Contractor.

3. The Contractor

3.1. Responsibility of the Contractor

3.1.1. The Contractor shall design, execute and complete the works in accordance with the Contract and with the Project Manager's instructions, and shall remedy any defects in the works.

3.1.2. The Contractor shall provide all documents specified in the Contract, and all Contractor's personnel, goods, consumables and other things and services, whether of a temporary or permanent nature, required in and for the design, execution, and completion of Works and remedying of defects.

3.1.3. The Contractor shall be responsible for the adequacy, stability, and safety of all site operations and of all methods of construction. The Contractor (i) shall be responsible for all Contractor's documents, temporary works and such design of each item of Works, equipment or materials as is required for the item to be in accordance with the contract and (ii) shall not otherwise be responsible for the design or specification of the permanent works.

3.1.4. The Contractor shall, whenever required by the Project Manager, submit details of the arrangements and methods which the Contractor purposes to adopt for the execution of the works. No significant alteration to these arrangements and methods shall be made without this having previously being notified to the Project Manager.

3.1.5. If the Contract specifies that the Contractor shall design any part of the permanent works, then unless otherwise stated:

a) The Contractor shall submit to the Project Manager the Contractor's documents for this part in accordance with the procedures specified in the Contract;

b) The Contractor's documents, in this regard, shall be in accordance with the specification and drawings, shall be written in the language for communications defined in GCC 1.4 and shall include additional information required by the Project Manager to add to the drawings for co-ordination of each party's designs;

c) The Contractor shall be responsible for this part and it shall, when the works are completed, be fit for such purposes for which the part is intended as are specified in the Contract; and

d) Prior to the commencement of the tests on completion, the Contractor shall submit to the Project Manager the "as- built" documents and operation and maintenance manuals in accordance with the specification and in sufficient detail for the Project Manager to operate, maintain, dismantle, reassemble, adjust and repair this part of the Works. Such part shall not be considered to be completed for the purpose of taking-over under GCC.9.2 until these documents and manuals have been submitted to the Project Manager.

3.1.6. Within 14 days of possession of site, the Contractor shall erect an information board as specified in SCC and construct a permanent board towards the completion of Project.

3.2. Performance Security

3.2.1. The Contractor shall, within thirty (30) days of the Notification of Award, provide a performance security equivalent to ten percent (10%) of the Contract Price valid until as specified in SCC. However, in case of delay in completion of the Contract, the validity of the contract performance security shall be extended by the Contractor for such period of delay. Employer shall encash the performance security to avoid it becoming invalid in case of failure by Contractor to extend the validity before 7 days of expiry.

3.2.2. For Contracts not deducting retention money if specified in SCC, the Contractor shall extend the validity of the performance security until 30 days beyond defect liability period (DLP) before the release of final bill payment. In case of failure to extend, Employer shall withhold from final payment equivalent to 10% of the executed Contract price or the total final payment, in lieu of retention money. If the executed Contract price exceeds the Contract price, then retention money equivalent to 10% of the exceeded amount in addition to the performance security already submitted shall be deducted from the running bills and retained until 30 days beyond DLP.

3.2.3. The performance security shall be denominated in the currency or currencies of the Contract or in a freely convertible currency acceptable to Employer and shall be in the form specified in SCC, issued/enforceable by any financial institution.

3.2.4. The performance security shall be discharged and returned to the Contractor with in thirty (30) days after the issuance of Work completion certificate/no defects liability certificate, whichever is applicable.

3.2.5. The proceeds from the Performance Security shall be payable to Employer as compensation for any loss resulting from the Contractor's failure to complete its obligations under the Contract.

3.3. Contractor's Representative and Construction Manager

3.3.1. If the Contractor's Representative is not named in the Contract, then within fourteen (14) days of the Effective Date, the Contractor shall appoint his representative and shall request Employer in writing to approve the person so appointed. If Employer makes no objection to the appointment within fourteen (14) days, the Contractor's Representative shall be deemed to have been approved. If Employer objects to the appointment within fourteen (14) days giving the reason thereof, then the Contractor shall appoint a replacement within fourteen (14) days of such objection, and the foregoing provisions of this clause 3.3.1 shall apply thereto.

3.3.2. The Contractor's Representative shall represent and act for the Contractor at all times during the currency of the Contract and shall give to the Project Manager all the Contractor's notices, instructions, information and all other communications under the Contract.

3.3.3. All notices, instructions, information and all other communications given by Employer or the Project Manager to the Contractor under the Contract shall be given to the Contractor's Representative or, in its absence, its deputy, except as herein otherwise provided.

3.3.4. The Contractor shall not revoke the appointment of the Contractor's Representative without Employer's prior written consent, which shall not be unreasonably withheld. If Employer consents thereto, an equivalently qualified, experienced and competent replacement shall be appointed in pursuant to the procedure set out in 3.3.1 3.3.1.

3.3.5. The Contractor's Representative may, subject to the approval of Employer (which shall not be unreasonably withheld), at any time delegate to any person any of the powers, functions and authorities vested in him or her. Any such delegation may also be revoked at any time subject to the approval of Employer. Any such delegation or revocation shall be subject to a prior notice signed by the Contractor's Representative, and shall specify the powers, functions and authorities thereby delegated or revoked. No such delegation or revocation shall take effect unless and until a copy thereof has been delivered to Employer and the Project Manager.

3.3.6. Any act or exercise by any person of powers, functions and authorities so delegated to him or her in accordance with this clause 3.3.53.3.5 shall be deemed to be an act or exercise by the Contractor's Representative.

3.3.7. From the commencement of Works at the Site until operational acceptance, the Contractor's Representative shall appoint a suitable person as the construction manager (hereinafter referred to as "the Construction Manager"). The Construction Manager shall supervise all work done at the Site by the Contractor and shall be present at the Site throughout normal working hours except when on leave, sick or absent for reasons connected with the proper performance of the Contract. Whenever the Construction Manager is absent from the Site, an equivalently qualified, experienced and competent person shall be appointed to act as his or her deputy.

3.3.8. Employer may by notice to the Contractor object to any representative or person employed by the Contractor in the execution of the Contract who, in the reasonable opinion of Employer, may behave inappropriately, may be incompetent or negligent, or may commit a serious breach of the Site regulations provided under GCC 3.8 Employer shall provide evidence of the same, whereupon the Contractor shall remove such person from the Site.

3.3.9. If any representative or person employed by the Contractor is removed in accordance with 3.3.83.3.8, the Contractor shall, where required, promptly appoint a replacement.

3.3.10. If any dispute of any kind whatsoever arises between Employer and the Contractor in connection with or arising out of the Contract, including without prejudice to the generality of the foregoing, any question regarding its existence, validity or termination, or the execution of the works – whether during the progress of the works or after their completion and whether before or after the termination, abandonment or breach of the Contract – the parties shall seek to resolve any such dispute or difference by mutual consultation.

3.4. Opportunities for other Contractors

3.4.1. The Contractor shall, upon written request from Employer or the Project Manager, provide a reasonable opportunity to other Contractors employed by Employer to carry out the work at or near the Site. If the Contractor so requires, Employer shall facilitate the Contractor to make use of the facilities created by other Contractors in and around the site, for the purpose of execution of the Contract. In the process of and as a result of using such facilities, if any damage is caused to the Works, the Contractor shall be responsible to make good such damage at his own cost.

3.4.2. If the Contractor, upon written request from Employer or the Project Manager, makes available to other Contractors any roads or access ways, (the maintenance for which the Contractor is responsible), permits the use by such other Contractors of the Contractor's Equipment, or provides any other service of whatsoever nature to such other Contractors, Employer shall fully compensate the Contractor for any loss or damage caused or occasioned by such other Contractors in respect of any such use or service, and shall pay to the Contractor a reasonable remuneration for the use of such equipment or the provision of such services.

3.4.3. The Contractor shall also arrange to perform its work so as to minimize, to the extent possible, interference with the work of other Contractors. The Project Manager shall determine the resolution of any difference or conflict that may arise between the Contractor and other Contractors and the workers of Employer with regard to their work.

3.4.4. The Contractor shall notify the Project Manager promptly of any defects in the other Contractors' work that come to its notice, and that could affect the Contractor's work. The Project Manager shall determine the corrective measures, if any, required to rectify the situation after inspection of the Works. Decisions made by the Project Manager shall be binding on the Contractor.

3.5. Emergency Work

3.5.1. If, for reason of an emergency arising during the execution of the Contract, any protective or remedial work is necessary as a matter of urgency to prevent damage to the Works, the Contractor shall immediately carry out such work.

3.5.2. If the Contractor is unable or unwilling to do such work immediately, Employer may do or cause such work to be done, as it may determine it necessary in order to prevent damage to the Works. In such event Employer shall, as soon as practicable after the occurrence of any such emergency, notify the Contractor in writing of such emergency, the work done and the reasons thereof. If the work done or caused to be done by Employer is work that the Contractor was liable to do at its own expense under the Contract, the reasonable costs incurred by Employer in connection therewith shall be paid by the Contractor to Employer.

3.6. Progress Review Meetings

3.6.1. The Contractor shall attend all periodic progress review meetings organized by the Project Manager or his authorized representative. The deliberations in the meetings shall inter-alia include the scheduled program, progress of work achieved (including details of manpower, tools and plants deployed by the Contractor vis-a-vis agreed work schedule), inputs to be provided by Employer, delays, if any and recovery programme, specific hindrances to the Works and work instructions by the Project Manager. The minutes of such meetings shall be prepared by the Project Manager. These minutes shall be jointly signed by the Project Manager or his authorized representative and the Contractor and one copy of the signed minutes shall be handed over to the Contractor.

3.7. Protection of the Environment

3.7.1. The Contractor shall take all reasonable steps to protect the environment on and off the Site and to avoid damage or nuisance to persons or to property of the public or others resulting from pollution, noise or other causes arising as a consequence of his methods of operation, and shall preserve and protect all existing vegetation and trees on or adjacent to the Site which do not unreasonably interfere with the execution of the Works. The Contractor shall be held responsible for all unauthorized cutting of and damage to trees, by careless operation of his plant, equipment or materials and stockpiling of materials etc. and Employer shall have no responsibility on this account.

3.8. Site Regulations and Safety

3.8.1. Employer and the Contractor shall establish Site regulations setting out the rules to be observed in the execution of the Contract at the Site and shall comply therewith. The Contractor shall draft site regulations and submit a copy to the Project Manager, Employer

for his approval, which approval shall not be unreasonably withheld. Notwithstanding the approval of the Project Manager, the Contractor shall be responsible for the adequacy, stability and safety of all Site operations and methods of execution of the Contract.

3.8.2. Such Site regulations shall include, but shall not be limited to, rules in respect of security, safety of the Works, gate control, sanitation, medical care, and fire prevention.

3.9. Site Clearance

3.9.1. Site Clearance in course of performance: In the course of carrying out the Contract, the Contractor shall keep the Site reasonably free from all unnecessary obstruction, store or remove any surplus materials, clear away any wreckage, rubbish or temporary works from the Site, and remove any Contractor's Equipment no longer required for execution of the Contract.

3.9.2. Clearance of Site after completion: After completion of all parts of the Works, the Contractor shall clear away and remove all wreckage, rubbish and debris of any kind from the Site, and shall leave the Site and Works clean and safe to the satisfaction of the Project Manager, without which the final bill shall be withheld.

3.10. Watching and Lighting

3.10.1. The Contractor shall provide and maintain at its own expense all lighting, fencing, and watching when and where necessary for the proper execution and the protection of the Works, or for the safety of the owners and occupiers of adjacent property and for the safety of the public.

3.11. Explosives

3.11.1. Permission for the use of explosives shall be obtained from the Project Manager or from any appropriate authority as directed by the Project Manager and all explosive materials shall be used only under close supervision. It shall be the responsibility of the Contractor to seek and obtain any necessary permits, and to ensure that the requirements of the authorities are complied with, in all respects. Failure to do so may result in the Project Manager withdrawing permission to use explosives. The indemnification provided for shall include indemnification against all claims in respect of any incident arising from the use of explosives.

3.12. Temporary Utilities

3.12.1. The Contractor, except as stated in SCC, be responsible for the provision of all temporary utilities, including electricity, gas, telecommunication, drinking water, construction water and any other services the Contractor may require for the execution of the Works.

3.13. Working hours

3.13.1. Unless otherwise provided in the Contract, no work shall be carried out during the night and on public holidays of the Kingdom of Bhutan without prior written consent of Employer, except where work is necessary to ensure the safety of the Works, for the

protection of life, or to prevent loss or damage to property. Where work is needed to be carried out during public holidays, the Contractor shall immediately advise the Project Manager and seek his advice and consent. However, the provisions of this clause shall not apply to any work, which is customarily carried out in multiple shifts. Notwithstanding the above provisions, female labour shall not be employed in night shifts.

3.13.2. Notwithstanding 3.13.1 or 5.15.2, if and when the Contractor considers it necessary to carry out work at night or on public holidays so as to meet the Time for Completion and requests the Employer's consent thereto, Employer shall not unreasonably withhold such consent.

3.14. Program of Performance

3.14.1. Within twenty-eight (28) days of the Effective Date, the Contractor shall prepare and submit in soft copies to the Project Manager for his approval a detailed program of performance of the Contract, made in the form of PERT network (prepared in the software as may be directed by Employer) and showing the sequence in which it proposes to design, execute and complete the Works as well as the date(s) by which the Contractor reasonably requires that Employer shall have fulfilled its obligations under the Contract so as to enable the Contractor to execute the Contract in accordance with the program and to achieve completion of the Works in accordance with the Contract. The Contractor shall update and revise the program as and when appropriate or when required by the Project Manager, but without modification in the Time for Completion given in the SCC and any extension granted in accordance with GCC 8.3 , and shall submit all such revisions to the Project Manager for his approval.

3.15. Progress of Performance

3.15.1. If at any time the Contractor's actual progress falls behind the program referred to in 3.143.14.1, or it becomes apparent that it shall so fall behind, the Contractor shall, at the request of Employer or the Project Manager, prepare and submit to the Project Manager a revised program, taking into account the prevailing circumstances, and shall notify the Project Manager of the steps being taken to expedite progress so as to attain completion of the Works within the Time for Completion under GCC 8.1, any extension thereof entitled under GCC 8.3.1, or any extended period as may otherwise be agreed upon between Employer and the Contractor.

4. Subcontracting

4.1. The Contractor shall not Sub-Contract any part of the Contract or any part of the scope of work under the Contract, without explicit and written approval of Employer.

4.2. Where sub-Contracting is allowed and approved, the Contractor shall prepare a list of subcontractors with the approval of Employer. The Contractor may propose any addition to or deletion from any such list. The Contractor shall submit any such list or any modification thereto to Employer for its approval in sufficient time so as not to impede the progress of Works. Such approval by Employer for any of the subcontractors shall not relieve the Contractor from any of its obligations, duties or responsibilities under the Contract.

4.3. The Contractor shall be responsible fully for the acts, defaults and negligence of his sub-Contractors, their agents, servants, and workmen as if such acts, defaults, and negligence is of the Contractor. The Contractor shall be under obligation to furnish the un-priced copies of the Contracts awarded to the sub-Contractors at the request of Employer.

5. Contractor's Staff/Labour and Equipment

5.1. Key Personnel

5.1.1. The Contractor shall employ the key personnel named in the Schedule of Key Personnel, as referred to in the SCC, to carry out the functions stated in the Schedule or other personnel approved by the Project Manager. The Project Manager shall approve any proposed replacement of key personnel only if their relevant qualifications and abilities are substantially equal to or better than those of the personnel listed in the Schedule. If the Contractor fails to deploy the personnel as committed in the Biding Document, the employer shall stop the work if the quality of work is going to suffer or otherwise deduct the salaries of such personnel at a rate stipulated in the SCC per month per personnel for every month of absence of such personnel from the site. Such deductions shall continue till such time that the Contractor deploys the key personnel acceptable to the employer. If the Contractor fails to deploy such key personnel within one to four months, the deductions may be discontinued and the Contractor's failure to deploy such personnel shall be treated as a fundamental breach of Contract. This shall also apply to the commitment of employment to Bhutanese.

5.2. Labour

5.2.1. The Contractor shall provide and employ on the Site in the execution of the Works such skilled, semi-skilled and unskilled labour as is necessary for the proper and timely execution of the Contract. The Contractor is encouraged to use local labour that has the necessary skills.

5.2.2. Unless otherwise provided in the Contract, the Contractor shall be responsible for the recruitment, transportation, accommodation, medical care and catering of all labour, local or expatriate, required for the execution of the Contract and for all payments in connection therewith.

5.2.3. The Contractor shall be responsible, at his own cost, for obtaining all necessary permit(s) and/or visa(s) from the appropriate authorities for the entry of all labour and personnel to be employed on the Site into the Kingdom of Bhutan. The Contractor shall submit to Employer for its approval details and bio-data of all expatriate personnel, which he proposes to engage for the performance of Works under the Contract, at least sixty (60) days prior to their departure for Bhutan. Such data for each personnel shall contain, among other details, his name, present address, his assignment and responsibility in connection with the Works, and a short resume of his qualifications, experience etc. in relation to the works to be performed by him.

5.2.4. Any expatriate personnel deployed for the Works at Site, if found unsuitable or unacceptable later on to RGoB/ Employer, shall within a reasonable time, be repatriated by the Contractor, who shall make alternative arrangements for providing a suitable replacement.

5.2.5. The Contractor shall at its own expense provide the means of repatriation to all of its and its subcontractor's personnel employed on the Contract at the Site to their various home countries. It shall also provide suitable temporary maintenance of all such persons from the cessation of their employment on the Contract to the date programmed for their departure. In the event that the Contractor defaults in providing such means of transportation and temporary maintenance, Employer may provide the same to such personnel and recover the cost of doing so from the Contractor.

5.2.6. No person brought to Bhutan for the completion of Works shall be repatriated without the consent of the Project Manager on a written request from the Contractor for such repatriation giving reasons thereof. The Project Manager may give permission for such repatriation provided it is satisfied that the progress of Works shall not suffer due to such repatriation/replacement.

5.2.7. The Contractor shall at all times during the progress of the Contract use its best endeavors to prevent any unlawful, riotous or disorderly conduct or behavior by or amongst its employees and the labour of its subcontractors for the preservation of peace and protection of persons and property at the Site and its surroundings.

5.2.8. In dealing with the labourers and workers engaged at the Works by him or his sub-Contractors, the Contractor shall pay due regards to all recognized festivals, holidays, and traditions and cultures of the labourers. The Contractor shall also comply with all local laws and regulations pertaining to labour and expatriate personnel issued by Ministry of Home and Cultural Affairs, RGOB. The Contractor shall indemnify Employer in respect of all claims that may be made against Employer for non-compliance thereof by the Contractor. In case of non-compliance by the Contractor, the Project Manager may take such actions as may be necessary for compliance of the various labour laws and recover the costs thereof from the Contractor.

5.2.9. The Contractor shall, deliver to the Project Manager or to the Project Manager's representative, a report in such form and at such intervals as the Project Manager may prescribe, regarding the number and names of supervisory staff and different categories of labour engaged by the Contractor.

5.3. Contractor's Equipment

5.3.1. All the equipment brought by the Contractor onto the Site shall be deemed to be intended to be used exclusively for the execution of the Contract. The Contractor shall not remove the same from the Site without the Project Manager's consent stating that the equipment is no longer required for the execution of the Contract.

5.3.2. The Contractor shall deploy construction equipment as per agreed schedule. Provided further that in case of slow rate of progress of Works, the Contractor should supplement

the agreed schedule of Contractor's Equipment with additional construction equipment so as to ensure completion of Works within Time for Completion at no extra cost to Employer.

5.3.3. If the Contractor does not make available at site the equipment committed for the Contract, the hiring charges of such equipment shall be deducted at a rate stipulated in the SCC per month for every month of absence for a period up to four months after which the deductions shall be discontinued and the Contractor's failure to produce such equipment at site shall be treated as a fundamental breach of Contract.

5.3.4. Unless otherwise specified in the Contract, upon completion of the Works, the Contractor shall remove from the Site all Contractor's Equipment brought by the Contractor onto the Site and any surplus materials remaining thereon.

5.3.5. Employer may, if requested, use its best endeavours to assist the Contractor in obtaining any government permission required by the Contractor for the export of the Contractor's Equipment imported by the Contractor for use in the execution of the Contract that is no longer required for the execution of the Contract.

6. Plant, Material and Workmanship

6.1. Methodology of Construction & Equipment mobilization

6.1.1. Methodology of construction and the work plan adopted by Contractor shall match the construction methodology/requirements specified in the Technical Specifications. The suggested minimum plant & equipment and machinery to be deployed by the Contractor for the execution of Works shall be as given in Technical Specifications. The Contractor shall arrange at his own expense all tools, plant and equipment required for execution of the Works.

6.2. Test and Inspection

6.2.1. The Contractor shall at its own expense carry out at the place of manufacture and/or on the Site all such tests and/or inspections of the plant, materials and any part of the Works as specified in the Contract.

6.2.2. Employer and the Project Manager or their designated representatives shall be entitled to attend the aforesaid test and/or inspection, provided that Employer shall bear all costs and expenses incurred in connection with such attendance including, but not limited to, all travelling and boarding & lodging expenses.

6.2.3. Whenever the Contractor is ready to carry out any such test and/or inspection, the Contractor shall give a reasonable advance notice of such test and/or inspection and of the place and time thereof to the Project Manager. The Contractor shall obtain from any relevant third party or manufacturer any necessary permission or consent to enable Employer and the Project Manager (or their designated representatives) to attend the test and/or inspection.

6.2.4. The Contractor shall provide the Project Manager with a certified report of the results of any such test and/or inspection.

6.2.5. If Employer or Project Manager (or their designated representatives) fails to attend the test and/or inspection, or if it is agreed between the Parties that such persons shall not do so, then the Contractor may proceed with the test and/or inspection in the absence of such persons, and may provide the Project Manager with a certified report of the results thereof.

6.2.6. The Project Manager may require the Contractor to carry out any test and/or inspection not required by the Contract, provided that the Contractor's reasonable costs and expenses incurred in the carrying out of such test and/or inspection shall be added to the Contract Price. Further, if such test and/or inspection impede the progress of Works and/or the Contractor's performance of its core obligations under the Contract, due allowance shall be made in respect of the Time for Completion and the other obligations so affected.

6.2.7. If any part of the Works fails to pass any test and/or inspection, the Contractor shall either rectify or replace such part of the Works and shall repeat the test and/or inspection upon giving a notice in accordance with clause 6.2.36.2.3.

6.2.8. If any dispute or difference of opinion shall arise between the Parties in connection with or arising out of the test and/or inspection of any part of the Works that cannot be settled between the Parties within a reasonable period of time, it may be referred to the Adjudicator for determination in accordance with 3.2.

6.2.9. The Contractor agrees that neither the execution of a test and/or inspection of plant, equipment or any part of the Works, nor the attendance by Employer or the Project Manager, nor the issue of any test certificate pursuant to 6.2.4, shall release the Contractor from any other responsibilities under the Contract.

6.2.10. No part of the Works or foundations shall be covered up on the Site without the Contractor carrying out any test and/or inspection required under the Contract. The Contractor shall give a reasonable notice to the Project Manager whenever any such part of the Works or foundations is ready or about to be ready for test and/or inspection; such test and/or inspection and notice thereof shall be subject to the requirements of the Contract. The Project Manager shall then without unreasonable delay carry out the test/inspection or measurement.

6.2.11. The Contractor shall uncover any part of the Works, or shall make openings in or through the same as the Project Manager may from time to time require at the Site, and shall reinstate and make good such part or parts.

6.2.12. If any part of the Works have been covered up at the Site after compliance with the requirement of 6.2.106.2.10 and are found to be executed in accordance with the Contract, the expenses of uncovering, making openings in or through, reinstating, and making good the same shall be borne by Employer, and the Time for Completion shall be reasonably adjusted to the extent that the Contractor has thereby been delayed or impeded in the performance of any of its obligations under the Contract.

7. Work Execution

7.1. Benchmark

7.1.1. The Contractor shall be responsible for the true and proper setting-out of the Works in relation to bench marks, reference marks and lines provided to it in writing by or on behalf of Employer.

7.1.2. If, at any time during the progress of Works, any error shall appear in the position, level or alignment of the Works, the Contractor shall forthwith notify the Project Manager of such error and, at its own expense, immediately rectify such error to the reasonable satisfaction of the Project Manager. If such error is based on incorrect data provided in writing by or on behalf of Employer, the expense of rectifying the same shall be borne by Employer. The checking of any benchmark by the Project Manager shall not relieve the Contractor of his responsibility.

7.2. Contractor's Supervision

7.2.1. The Contractor shall give or provide all necessary superintendence during the execution of Works, and the Construction Manager or its deputy shall be on the Site to provide full-time superintendence of the execution as long as the Project Manager may consider necessary for the proper fulfilment of the Contractual obligations. The Contractor shall provide and employ only technical personnel who are skilled and experienced in their respective callings and supervisory staff who are competent to adequately supervise the work at hand.

7.3. Quality Assurance Program

7.3.1. Sampling, testing and quality assurance requirements shall be as per the details given in Technical Specifications. All costs associated with testing of materials required as per Technical Specifications shall be deemed to be included in the rates/prices in the Bill of Quantities.

7.4. Progress Report

7.4.1. The Contractor shall monitor progress of all the activities specified in the program referred to in 3.143.14.1 above, and supply a progress report to the Project Manager every month.

7.4.2. The progress report shall be in a form acceptable to the Project Manager and shall include, among other details: (a) percentage completion achieved vis-à-vis planned activities; and (b) where any activity is behind schedule providing reasons and likely consequences and stating the corrective action being taken. The progress report shall be supported by photographs and other written material as the Project Manager may direct.

7.5. Materials obtained from excavation

7.5.1. Materials of any kind obtained from excavation on the Site shall remain the property of Employer and shall be disposed of as the Project Manager may direct.

7.5.2. All fossils, coins, articles of value or antiquity, structures and other remains or things of geological or archaeological interest discovered on the Site shall be the absolute property of Employer and the Contractor shall take reasonable precautions to prevent his workmen or any other person from removing or damaging any such article or thing. Upon discovery and before removal of such items or structures, the Contractor shall immediately inform the Project Manager and shall dispose the same as per the direction of the Project Manager and at the cost of Employer.

8. Commencement, Delays and Suspension

8.1. Time for commencement and completion

8.1.1. The Works must be taken up and completed in all respects within the specified time of completion as mentioned in the SCC and the NoA.

8.1.2. Before the actual commencement of works, the Contractor shall submit an execution schedule of work clearly showing the materials, men and equipment to be mobilized by him to execute the works. The schedule should contain the planned monthly progress of the works for the approval of the Project Manager who shall have the authority to make additions, alternations and substitutions to such schedule in consultation with the Contractor.

8.2. Manner of Execution

8.2.1. The Contractor shall carry out all aspects of the Works in the manner (if any) specified in the Contract:

a) In a proper workmanlike and careful manner with a high sense of aesthetics and in accordance with recognized good practice; and

b) With properly equipped facilities and using non-hazardous materials, except as otherwise specified in the Contract.

8.2.2. Within thirty (30) days of the Effective Date, the Contractor shall prepare and submit in soft copies to the Project Manager for his approval a detailed construction schedule showing the sequence and interdependence of activities and work breakdown structure covering all the activities to meet milestone schedules for complete performance of work, starting from the commencement date to completion within the Time for Completion.

8.2.3. The detailed construction schedule shall include time scaled network diagrams and Gantt charts, based on calendar days. It shall be constructed to show the order in which the Contractor proposes to carry out the work and availability/requirement and use of manpower, materials and construction equipment. The Contractor shall utilize the detailed construction schedule in planning, scheduling, monitoring, coordinating and performing the Works under the Contract (including activities of subcontractors, plant vendors, material suppliers, etc.). The program so submitted by the Contractor shall be in accordance with the Contract.

8.2.4. The Project Manager and Contractor shall meet within seven (7) days of submittal of the detailed construction schedule to review and make any necessary adjustments or revisions. The Contractor shall submit the revised schedule within seven (7) days of re-submission. The process of finalizing the detailed construction schedule shall be completed within sixty (60) days from the date of issue of Notification of Award. The detailed construction schedule, once approved by Employer, shall become the baseline record schedule. The baseline detailed construction schedule shall be used for all monitoring and evaluation of Contractor's performance.

8.2.5. The Contractor shall update and revise the schedule as and when appropriate or when required by the Project Manager, but without modification in the Time for Completion and any extension granted and shall submit all such revisions to the Project Manager for his approval.

8.2.6. If at any time the Contractor's actual progress falls behind the program, or it becomes apparent that it shall so fall behind, the Contractor shall, at the request of Employer or the Project Manager, prepare and submit to the Project Manager a revised program, taking into account the prevailing circumstances, and shall notify the Project Manager of the steps being taken to expedite progress so as to attain completion of the Works within the Time for Completion, any extension thereof entitled, or any extended period as may otherwise be agreed upon between Employer and the Contractor.

8.3. Extension of Time for Completion

8.3.1. The Time(s) for Completion specified in the SCC shall be extended if the Contractor is delayed or impeded in the performance of any of its obligations under the Contract by reason of any of the following:

a) Any Change in the Works as provided in GCC 12.2;
b) Any occurrence of Force Majeure as provided in GCC 16
c) Any suspension order given by Employer under GCC 14.5 hereof or reduction in the rate of progress pursuant to 14.5.4;
d) Any changes in laws and regulations as provided in GCC 12.7.1
e) Any default or breach of the Contract by Employer, specifically including failure to supply agreed items or any activity, act or omission of any other Contractors employed by Employer; or
f) Any other matter specifically mentioned in the Contract.

8.3.2. Extension of time shall be for such period as shall be fair and reasonable in all the circumstances and as shall fairly reflect the delay or impediment sustained by the Contractor.

8.3.3. Except where otherwise specifically provided in the Contract, the Contractor shall submit to the Project Manager a notice of a claim for an extension of the Time for Completion, together with particulars of the event or circumstance justifying such extension as soon as reasonably practicable after the commencement of such event or circumstance. As soon as reasonably practicable after receipt of such notice and supporting particulars of the claim, Employer and the Contractor shall agree upon the period of such extension. In the event that the Contractor does not accept Employer's estimate of a fair and reasonable time

extension, the Contractor shall be entitled to refer the matter to the Adjudicator, pursuant to 3.2.

8.3.4. In no case the extension in Time for Completion shall be permitted for the defaults on the part of the Contractor.

8.4. Liquidated Damages

8.4.1. The Contractor shall pay liquidated damages to the Employer at the rate per day stated in the SCC for each day that the Completion Date is later than the Intended Completion Date. The total amount of liquidated damages shall not exceed the ten percent (10%) of the executed Contract Price. The Employer may deduct liquidated damages from payments due to the Contractor. Payment of liquidated damages shall not affect the Contractor's liabilities.

9. Taking Over

9.1. Test on Completion

9.1.1. The Contractor shall carry out the tests on completion in accordance with clause GCC 6.2.

9.1.2. The Contractor shall provide to the Project Manager with a minimum of twenty-one (21) days' notice of the date after which the Contractor shall be ready to carry out each of the tests on completion. Unless otherwise agreed, tests on completion shall be carried out within fourteen (14) days after the notice period on such day or days, as the Project Manager shall instruct.

9.1.3. In considering the result of the tests on completion, Employer shall make allowances for the effect of any use of the Works by Employer on the performance or other characteristics of the Works. As soon as the Works, or a part, have passed any tests on completion, the Contractor shall submit a certified report of the results of these tests to Employer.

9.1.4. If the tests on completion are being unduly delayed by the Contractor, Employer may by notice require the Contractor to carry out the tests within twenty-one (21) days after receiving the notice. The Contractor shall carry out the tests on such day or days within that period as the Contractor may fix and of which he shall give notice to Employer.

9.1.5. If the Contractor fails to carry out the tests on completion within the period of twenty-one (21) days, the Employer's personnel may proceed with the tests at the risk and cost of the Contractor. The tests on completion shall then be deemed to have been carried out in the presence of the Contractor and the result of the tests shall be accepted as accurate.

9.1.6. If the Works, or a part, fail to pass the tests on completion, Employer may require the failed tests on completion on any related work, to be repeated under the same terms and conditions.

9.1.7. If the Works, or a part, fail to pass the tests on completion repeated under GCC.9.1 above, the Project Manager shall be entitled to:

a) order further repetition of tests on completion as provided under GCC.9.1;
b) reject the Works if the effect of the failure is to deprive Employer of substantially the whole benefits of the Works in which event Employer shall have the same remedies as are provided in GCC 10.3.3 (c);
c) issue a Taking-Over Certificate, if Employer so requests.

9.2. Taking Over of Works

9.2.1. The Works shall be taken over by Employer upon successful execution of Works by the Contractor in accordance with provisions of Contract.

9.2.2. On successful completion of Works or any part thereof and upon request of the Contractor for taking over the Works and issuance of Taking Over Certificate (TOC), Employer shall, within forty-five (45) days after the receipt of the Contractor's application, or within fifteen (15) days from the date of actual handing over of relevant Works, whichever is later, either issue the TOC or reject the application giving its reasons and specifying the work required to be done by the Contractor to enable the TOC to be issued.

9.2.3. TOC shall be issued to the Contractor specifying the date on which the Works or any part thereof were complete and ready for taking over, after ascertaining the following:

a) The Works have been satisfactorily completed by the Contractor as per the provisions of Contract.
b) The Contractor has cleared the Site of all the surplus materials, removed all scaffoldings, shuttering materials, labour huts/sheds, cleaned the dirt from Site, temporary sanitary and water supply arrangements and all electrical gadgets/ equipment/ switches, wiring, any wood work or any such item, as relevant to the Contract to the satisfaction of the Project Manager, except those required for carrying out rectification works.
c) All the defects have been rectified to the complete satisfaction of the Project Manager.

9.2.4. Issuance of such certificates shall not relieve the Contractor of any of his obligations which otherwise were to be complied with under the terms and conditions of the Contract.

9.2.5. Notwithstanding the above-mentioned provisions, the issuance of TOC shall not be held up due to a delay in completion/ rectification of works of minor nature that do not affect the performance/ use of the Works. In such a case the Contractor shall, however, be required to give an undertaking stating that in case he fails to complete/rectify the defects within a mutually agreed period, Employer shall be at liberty to carry out the work at his risk and cost, and deduct an amount as may be considered appropriate by Employer.

9.2.6. Issuance of TOC for any part of the Works is only for the purpose of facilitating the Contractor to receive the payment for part of the Works completed and for determination of liquidated damages in respect thereof and shall not relieve the Contractor of his responsibilities under the Contract towards other parts of the Works.

9.2.7. At the time of taking over the work, the Project Manager shall ensure that the Contractor constructs a permanent information board as specified in SCC.

9.3. Operating and Maintenance Manuals

9.3.1. If "as built" Drawings and/or operating and maintenance manuals are required, the Contractor shall supply them by the dates stated in the SCC.

9.3.2. If the Contractor does not supply the Drawings and/or manuals by the dates stated in the SCC, or they do not receive the Project Manager's approval, the Project Manager shall withhold the amount stated in the SCC from payments due to the Contractor.

10. Defects

10.1. Correction of Defects

10.1.1. The Project Manager shall check the Contractor's work and notify the Contractor of any Defects that are found. The Project Manager shall give notice to the Contractor of any Defects before the end of the Defects Liability Period (DLP), which begins at Completion, and is defined in the SCC. Every time notice of a Defect is given; the Contractor shall correct the notified Defect within the length of time specified by the Project Manager's notice.

10.2. Uncorrected Defects

10.2.1. If the Contractor has not corrected a Defect within the time specified in the Project Manager's notice, the Project Manager shall assess the cost of having the Defect corrected, and the Contractor shall pay this amount to the Employer. At the option of the Employer, payment of such costs may be made in whole or in part by the Employer deducting and keeping for itself appropriate amounts from the Retention Money and/or claiming against any bank guarantee provided by the Contractor.

10.2.2. Defects Liability Period shall be extended for as long as the defects remain to be corrected.

10.3. Defect Liability

10.3.1. If during the Defect Liability Period any defect is found in the design, engineering, materials and workmanship of the Works executed by the Contractor, the Contractor shall promptly, in consultation and agreement with Employer regarding appropriate remedying of the defects, and at its cost, repair, replace or otherwise make good such defect as well as any damage to the Works caused by such defect.

10.3.2. The Defect Liability Period shall be as specified in the SCC. Where any part of the Works is taken over separately, the Defects Liability Period for that part shall commence on the date it was taken over.

10.3.3. If the Contractor fails to commence the work necessary to remedy such defect or any damage to the Works caused by such defect within fifteen (15) days of the intimation of the defect, and complete the remedying of such defect within the time specified by Employer, Employer reserves the right to get such work done in a manner as mentioned hereunder:

a) carry out the work himself or by others, in a reasonable manner and at the Contractor's cost, but the Contractor shall have no responsibility for the work. The Contractor shall pay to Employer the costs reasonably incurred by Employer in remedying the defect or damage;

b) require the Project Manager to agree or determine a reasonable reduction in the Contract Price; or

c) if the defect or damage deprives Employer of substantially the whole benefit of the Works or any major parts of the Works, Employer may terminate the Contract as a whole, or in respect of such major part, which cannot be put to the intended use. Without prejudice to any other rights, under the Contract or otherwise, Employer shall then be entitled to recover all sums paid for the Works or for such part (as the case may be), plus financing costs and the cost of dismantling the same, clearing the site and returning plant and materials to the Contractor. If the Works or any part thereof cannot be used by reason of such defect and/or making good of such defect, the Defect Liability Period of the Works or such part, as the case may be, shall be extended by a period equal to the period during which the Works or such part cannot be used by Employer because of any of the aforesaid reasons. Upon correction of the defects in the Works or any part thereof by repair/replacement, such repair/replacement shall have the Defect Liability Period for a period of twelve (12) months from the time such replacement/repair of the Works or any part thereof has been completed.

10.3.4. On completion of the Defect Liability period of the whole of the Works or where Works have been taken over in parts, Employer shall issue a Defect Liability Certificate to the Contractor certifying the successful completion of defect liability period.

11. Measurement and Valuation

11.1. Except as otherwise stated in the Contract and notwithstanding local practice:

11.1.1. Measurement shall be made of the net actual quantity of each item of the Works, and

11.1.2. The method of measurement shall be in accordance with the BoQ, technical specifications or other applicable schedules.

11.2. Whenever Employer requires any parts of the Works to be measured, reasonable notice shall be given to the Contractor's representative, who shall:

11.2.1. Promptly either attend or send a qualified representative to assist the Project Manager in making the measurement, and

11.2.2. Supply any particulars requested by Project Manager.

11.3. If the Contractor fails to attend or send a representative, the measurement made by (or on behalf of) Employer shall be accepted as accurate.

11.4. Except as otherwise stated in the Contract, wherever any Works are to be measured from records, these shall be prepared by Employer. The Contractor shall, as and when requested, attend to examine and agree with the records with Employer, and shall sign the same when agreed. If the Contractor does not attend, the records shall be accepted as accurate.

11.5. If the Contractor examines and disagrees with the records, and/or does not sign them as agreed, then the Contractor shall give notice to Employer citing the reasons/basis for the records to be allegedly inaccurate. After receiving this notice, Employer shall review the records and either confirm or vary them. If the Contractor does not so give notice to Employer within fourteen (14) days after being requested to examine the records, they shall be accepted as accurate.

12. Variations and Adjustments

12.1. Contract Price Adjustment

12.1.1. The regulation and payment of Contract Price Adjustment under the Contract shall be governed by the provisions specified in the Bidding Documents. The Contract Price as awarded shall be the base Contract Price. A certain fixed percentage of the base Contract Price shall not be subject to any Contract Price Adjustment. The balance percentage to be specified shall be of identified components towards labour, material(s) and H.S. diesel oil, hereinafter called the variable component, shall be subject to Contract Price Adjustment.

12.1.2. The fixed component and the variable components shall be specified in SCC. The amount of Contract Price Adjustment payable/ recoverable for the work done during the relevant period shall be calculated as under:

CPA = ACP - BCP

Where,

CPA = Control Price Agreement

BCP = Base Contract Price

ACP = Adjusted Contract Price

ACP shall be computed as under:

$$ACP = BCP * \left[F + \frac{l * L_1}{L_0} + \frac{m * M_1}{M_0} + \frac{m * M_2}{M_0}\right]$$

F+l+m = 1

Where:

F = Fixed component expressed in percentage of the Base Contract Price which shall not be subject to any adjustment as quantified and stipulated in the SCC, generally 20%.

L = Labour component expressed in percentage of the Base Contract Price which shall be subject to Price Adjustment as quantified and stipulated in the SCC, generally up to 15% to 30%

M = Material component expressed in percentage (excluding material issued by Employer) of the Base Contract Price which shall be

subject to Price Adjustment as quantified and stipulated in the SCC, generally 30% to 60%

L = Labour Index

M = Material Index

SUBSCRIPT

'0' = refers to the value of the above-mentioned labour/ material indices as on thirty (30) days prior to the Bid opening date.

'1' = refers to the value of the corresponding labour / material indices as applicable for the preceding month in which the work is executed for which the adjustment is applicable, respectively.

12.1.3. The total amount payable on the Base Contract Price on account of the Contract Price Adjustment as indicated in above shall not exceed the maximum of twenty percent (20%) of the Contract Price as awarded.

12.1.4. Contract Price Adjustment(s) shall be calculated for the value of Works executed for the billing month as per agreed work schedule. For the purpose of payment/recovery of Price Adjustments, such payment/refund shall be operative and payable in accordance with the schedule completion period (including authorized extensions, if any) or actual completion period, whichever is earlier. Provided further that the Contractor would be eligible for such price adjustment claims or shall be liable for refund on the quantum of Works scheduled or the actual quantum of Works done provided always that the work done is more than or equal to the scheduled of work as per agreed work schedule.

12.1.5. The Contractor shall not be eligible for the payment of the price adjustment claims or liable for refund of Contract Price adjustment for the period beyond the schedule date of execution of Works if the Works has been delayed beyond the scheduled date(s) for reasons attributable to the Contractor. However, for quantities of Works executed beyond the scheduled dates of execution, the Contractor would be liable for refund of Contract Price Adjustment(s) for such delayed Work based on the value of the indices as applicable to the scheduled dates of execution, provided that if the indices of the actual dates of execution are lower than the indices as on scheduled dates of execution, then lower indices shall be applicable. In cases where the execution of Works is delayed for reasons attributable to Employer, the Contractor shall be eligible for payment or refund of price adjustment on such delayed execution of Works based on the indices prevailing as on the date of execution of such Works.

12.1.6. Rates of items included in the Bill of Quantities, whose quantities have varied beyond the permissible deviation limits and rates of extra items, derived and agreed from items included in the Bill of Quantities shall also be subject to price adjustment as per this clause.

12.1.7. The Contractor shall, every month after commencement of the Works, submit to the Project Manager a written notice of the changes, if any, that have occurred in the specified indices of Materials, and Labour or that of Diesel price, etc. during the previous reporting period containing the effective date of such change, with authenticated documentary evidence of the relevant applicable published indices / diesel price, etc.

12.1.8. Monthly bills for Contract Price Adjustment shall be made by the Contractor commencing first, from the month when all the relevant/ applicable indices/ diesel prices are available and not later than fifteen (15th) day of every month thereafter. The period for processing and making payment for these bills shall also be governed by the provisions as applicable to on-account/ progressive interim payments.

12.2. Change in Works

12.2.1. Introducing a Change

Employer shall have the right to propose, and subsequently require, that the Project Manager order the Contractor from time to time during the performance of the Contract to make any change, modification, addition or deletion to, in or from the Works in the form, quantity or quality of the Works or any part thereof (hereinafter called "Change"), provided that such Change falls within the general scope of the Works and does not constitute unrelated work and that it is technically practicable, taking into account both the state of advancement of the Works and the technical compatibility of the Change envisaged with the nature of the Works as specified in the Contract. Such changes shall include but not be limited to the following:

a) Increase or decrease in the quantity of any work included in the Contract;

b) Omission, insertion, or substitution of any item of work;

c) Change in the drawings, designs, specifications, character or quality or kind of any such work;

d) Change in the levels, lines, positions and dimensions of any part of the Works;

e) Additional work of any kind necessary for the completion of the Works;

f) Change in any specified sequence, method or timing of construction of any part of the Works.

12.2.2. Employer shall make any such variations by issuing written instructions to the Contractor and shall ensure that such variations are duly noted by the Contractor and the Project Manager. A variation made shall not, in any way, vitiate or invalid the Contract, but the effect, if any, of such variations shall be valued.

12.2.3. The Contractor shall execute and be bound by each variation, unless the Contractor promptly gives notice to Employer stating (with supporting particulars and documents) that (i) the Contractor cannot readily obtain the goods and materials required for the variation, or (ii) such variation triggers a substantial change in the sequence of the progress of the on-going works. Upon receipt of such a notice, Employer shall cancel, confirm or vary the instructions.

12.2.4. The Contractor may from time to time during its performance of the Contract, propose to Employer (with a copy to the Project Manager) any Change that the Contractor considers

necessary or desirable to improve the quality, efficiency or safety of the Works. Employer may at its discretion approve or reject any Change proposed by the Contractor.

12.2.5. Notwithstanding 012.2.1 and 12.2.2 12.2.1(b), change made necessary because of any default of the Contractor in the performance of its obligations under the Contract shall not be deemed to be a Change, and such change shall not result in any adjustment of the Contract Price or the Time for Completion.

12.3. Variations in Contract

12.3.1. The Contractor shall be under obligation to agree for the Changes as may be required during the execution of the Contract as per directions of the Project Manager and execute such changes at the same rates included in the Contract, provided the total effect of such changes does not exceed the limit of plus/minus twenty percent (+-20%) of the Contract Price. Such ceiling shall however be applicable only for items of work for which rates are provided in the Contract. Notwithstanding the aforesaid provision, the quantities for individual items, if specified in the Contract, can vary to any extent. No claim for revision of rates for any individual item in the Bill of Quantities shall be admissible irrespective of the extent to which the ordered quantity may get revised (+) or (-) during the actual execution of the Works. For Change beyond twenty percent (20%) of the Contract Price, the adjustment in the rates for Bill of Quantity items shall be made as per GCC.12.4. The procedure on how to proceed with and execute Changes is specified in GCC.12.4.

12.4. Adjustment of the Contract Price

12.4.1. If reduction or increase in the Contract Price due to Change is found to be more than twenty percent (20%) of the Contract Price, the Contract Price shall be adjusted as per the rates below:

Variation in value of Work	Increase in payment for minus variation	Decrease in payment for plus variation
Up to 20%	Nil	Nil
Above 20% & up to 35%	6.00%	3.00%
Above 35% & up to 60%	8.00%	4.00%
Above 60% & up to 100%	10.00%	5.00%
Above 100%		5.00%

12.4.2. While working out the value of work for the purpose of variation, the extra items for which new rates have been paid and payment towards price adjustment; and the adjustment towards statutory variations shall not be considered.

Illustration:

a. In case of variation in value of work by (plus) + sixty percent (60%), the payment for (60-20) percent, i.e., forty percent (40%) of value of work shall be decreased by four percent (4%). The reduction in Contract rates shall commence as soon as the value of work executed reaches 120% of Contract Price.

Award Value (AV)=100
Executed Value (EV)=160
Variation=+ 60%
Final Payable= EV-((60-20) %*(4%*160))
=160-((40%*(4%*160)) =160-2.56=157.44

b. In case of variation in value of work by (minus) – fifty-five percent (55%), the payment for (45-20) percent i.e., twenty-five percent (25%) of value of work shall be increased by eight percent (8%).
A=Award Value (AV) =2013935.35
B=Executed Value (EV) =1164731.44
C=Decrease in value of work (B-A) = 849,203.91
D=% decrease in value of work (C/A%) = -42.17%
E=% increase in payment on plus variation of -42.17% based on variation slab=8%
F=Amount on which 8% increase in payment will be applied (42.17%- 20%) *A=446,489.47
G=Decrease in payment (E%*F) =35,719.16
Final payable=B+G=12, 00,450.60

12.4.3. The Contractor within fifteen (15) days from the receipt of an order to execute any extra item shall submit rate analysis to the Project Manager supported by documentary evidence of basic rates adopted therein; having regard to the cost of materials, actual wages of labour, and other operational costs. The analysis so provided by the Contractor shall form the basis for determination of rates for such extra items. Extra items of work which are not provided in the Bill of Quantities shall be paid on the basis of Bhutan Schedule of Rates (BSR) after adjusting such rates for the place of Works and time period elapsed after the date of BSR. If rates for such extra items are not available in BSR, the rates for such items shall be determined based on the actual expenditure relating to that item including cost of materials, fabrication/machinery handling and erection at site plus twenty percent (20%) towards overheads including profits. The price of varied items determined by the Project Manager shall be final and binding on the Contractor. No payment shall be made for the items of Works ordered to be omitted.

12.4.4. If there is delay in Employer and the Contractor coming to an agreement on the rate of varied work, provisional rates at the rate of seventy-five percent (75%) of the rates as determined by Employer shall be payable till such time as the rates are finally determined. In any case, Employer shall decide the rates within a maximum period of forty-five (45) days from the date of submission for the analysis of rates by the Contractor.

12.4.5. Items of work for which rates have been derived shall be eligible for price adjustment as per the price adjustment formula with base date as per the Contract. Rates for extra items, derived as per GCC.0 above, shall be eligible for price adjustment as per the price adjustment formula with base date corresponding to the date of input costs considered for working out the rates.

12.5. Day Work

12.5.1. For work of a minor or incidental nature not covered in the Bill of Quantities, the Project Manager may instruct that a Change shall be executed on a daywork basis.

12.5.2. The Contractor shall deliver each day to the Project Manager accurate statements in duplicate which shall include the following details of the resources used in executing the previous day's work:

a) the names, occupations and time of Contractor's employees;

b) the identification, type and time of Contractor's Equipment and temporary works; and

c) the quantities and types of plant and materials used.

12.5.3. One copy of each statement shall, if correct, or when agreed, be signed by the Project Manager and returned to the Contractor. The Contractor shall then submit priced statements of these resources to the Project Manager for further approval and inclusion in the next running bill for payment.

12.6. Record of costs

12.6.1. In any case where the Contractor is instructed to proceed with a variation prior to the determination of the adjustment to the Contract Price in respect thereof, the Contractor shall keep records of the cost of undertaking the variation and of time expended thereon. Such records shall be open to inspection by the Project Manager at all reasonable times.

12.7. Change in Laws and Regulations

12.7.1. If, after the date seven (7) days prior to the last date of Bid submission, any law, regulation, ordinance, order or by-law having the force of law is enacted, promulgated, abrogated or changed in the Kingdom of Bhutan (which shall be deemed to include any change in interpretation or application by the competent authorities) that subsequently affects the costs and expenses of the Contractor and/or the Time for Completion, the Contract Price shall be correspondingly increased or decreased, and/or the Time for Completion shall be reasonably adjusted to the extent that the Contractor has thereby been affected in the performance of any of its obligations under the Contract. However, these adjustments would be restricted to direct transactions between Employer and the Contractor. These adjustments shall not be applicable on procurement of raw materials, intermediary components etc. by the Contractor of foreign Contractor and shall also not be applicable on the bought-out items dispatched directly from sub-vendor's works to site. Notwithstanding the foregoing, such additional or reduced costs shall not be separately paid or credited if the same has already been accounted for in the price adjustment provisions where applicable, in accordance with clause GCC 12.2 hereunder.

13. Contract Price and Payment

13.1. Contract Price

13.1.1. The Contract Price shall be as specified in the Contract Agreement subject to any additions and adjustments thereto or deductions therefrom as may be made pursuant to the Contract. If specified in the SCC, the Contract Price shall be adjusted.

13.1.2. The Contract Price charged by the Contractor for the performance of the Works shall not vary from the prices quoted by the Contractor in its Bid, with the exception of any price adjustments as per the provisions of the Contract specified in the SCC.

13.1.3. Subject to 2.3.12.3.1 and GCC16.1(h) hereof, the Contractor shall be deemed to have satisfied itself as to the correctness and sufficiency of the Contract Price, which shall, except as otherwise provided for in the Contract, cover all its obligations under the Contract.

13.2. Advance Payment

13.2.1. Mobilization Advance

a) Employer may provide for payment of interest free mobilization advance of a maximum ten (10) percent of the Contract price on request from the Contractor, if the payment of mobilization advance is stated in the SCC.

b) Together with the request for mobilization advance, the Contractor shall submit an unconditional bank guarantee for an equivalent amount of advance requested in accordance with the Contract agreement.

c) The advance shall be recovered through proportionate/percentage deductions from payments made to the Contractor. All advances shall be fully recovered by the time eighty percent (80%) of the Contract is executed.

13.2.2. Secured Advance

a) If stated in the SCC, Employer may provide for payment of secured advance to the Contractor against the construction materials brought to the work site as per the Contract agreement and verified by the Project Manager. The list of materials and the quantities not liable for secured advance if any, shall be specified in the SCC. In exceptional circumstances if specified in SCC, secured advance shall be given on account of plants & machineries.

b) The payment of the secured advance shall be based on the following conditions:

a. The materials shall be in accordance with the specifications and shall not be in excess of the requirements;

b. A declaration shall be given by the Contractor passing on the lien on the rights of the materials to the Employer. However, the materials delivered at work site, shall be properly stored and protected against loss, damage or deterioration by the Contractor;

c. The amount of the secured advance shall not be more than seventy-five (75%) of the cost of materials delivered at the site of works, which shall be supported by the original invoices/bills. All materials imported from other countries shall be supported by Bhutan Sales Tax receipts or customs clearance. In case of fabrication works off site, secured advance may be paid to the Contractor after site inspection is carried out by the Procuring Agency at the cost of the Contractor, submission of proof of payment and submission of work order;

d. The advance shall be recovered through proportionate/percentage deductions from payments made to the Contractor. All advances shall be fully recovered by the time eighty percent (80%) of the Contract is executed.

13.3. Terms of Payment

13.3.1. The Contract Price shall be paid as specified in the Contract:

a) The Contractor's request for payment shall be made to Employer in writing accompanied by invoices and documents, describing, as appropriate, the work done and related services performed in fulfilment of the obligations stipulated in the Contract.

b) Payment shall be made promptly by Employer, no later than 30 (thirty) days after the receipt of bills and documents in accordance with GCC 13.3.1(a), provided that the documents are compliant with all the requirements of Employer.

c) No payment made by Employer herein shall be deemed to constitute acceptance by Employer of the works or any part(s) thereof.

d) The currency or currencies in which payments are made to the Contractor under this Contract shall be those in which the Contract Price is expressed in the Contractor's Bid. In cases where the Bid price is in Indian Rupees or Bhutanese Ngultrum, Employer shall at its discretion make payment in either of the currencies at the exchange rate of one Ngultrum = one Indian Rupees.

e) Wherever applicable, the release of first progressive interim payment shall be subject to submission of documentary evidence by the Contractor towards having taken the insurance policy (ies) and acceptance of the same by the Project Manager.

13.4. Taxes and Duties

13.4.1. The prices bid by the Contractor shall include all duties, taxes, and levies that may be levied in accordance with the laws and regulations in force as of the date 30 days prior to the closing date for submission of Bids. As such, except as otherwise specifically provided in the Contract, the Contractor shall bear and pay all taxes, duties, levies and charges assessed on

the Contractor, its subcontractors or their employees by all municipal, state or national government authorities in connection with the Works in and outside of the Kingdom of Bhutan.

13.4.2. At the time of release of payment, tax shall be deducted at source (TDS) from Bhutanese Bidders and International Bidders as specified in the SCC from the gross amount of bills. Employer shall furnish necessary TDS Certificate to the Bidders, issued by the Department of Revenue & Customs, RGoB. The Contractor shall be responsible to deduct tax at source from the gross payments made to the sub-Contractors and deposit the same to the account of RGoB as per provisions of law in this regard in force from time to time.

13.4.3. If any rates of taxes or levies are increased or decreased, a new tax or levy is introduced, an existing tax is abolished, or any change in interpretation or application of any tax occurs in the course of the performance of Contract, an equitable adjustment of the Contract Price shall be made to fully take into account any such change by addition to the Contract Price or deduction therefrom, as the case may be.

13.4.4. The Contractor's staff, personnel and labour shall be liable to pay personal income tax in Bhutan in respect of such of their salaries and wages as are chargeable under the laws and regulations in force and the Contractor shall perform such duties with regard to such deductions thereof as may be imposed on him by such laws and regulations.

13.5. Retention Money

13.5.1. The Employer shall retain ten percent (10%) from each payment due to the Contractor in the proportion stated in the SCC until Completion of the whole of the Works as retention money.

13.5.2. The Retention Money may be returned to the Contractor upon issuance of No Defects Liability Certificate. After completion of the work, the Contractor may substitute the retention money with an unconditional bank guarantee, issued/enforceable by any financial institution in Bhutan. Such bank guarantee shall be valid until the completion of Defect Liability Period.

13.5.3. If the Contractor fails to remedy any reported defect within the Defects Liability Period, Employer shall withhold the payment or realize claims from the Retention Money, of an amount, which in the opinion of Employer, represent the cost of the defects to be remedied.

13.5.4. On completion of the Defects Liability Period, the Project Manager shall issue a no Defect Liability Certificate to the Contractor and release the retention money and/ or bank guarantee as available within fifteen (15) days from the issue of such certificate.

14. Termination

14.1. Termination for Employer's Convenience

14.1.1. Employer shall at any time terminate the Contract for any reason by giving the Contractor (and a copy to the Project Manager) a sixty (60) days prior notice of termination that refers to this clause GCC 14.1.

14.2. Termination for Contractor's default

14.2.1. In situations/conditions defined below, Employer shall serve a notice to the Contractor highlighting the default/limitation on the part of the Contractor and advising the Contractor to take appropriate corrective/remedial measures. If the Contractor fails to correct or to take steps to remedy the faults/limitations within fourteen (14) days of the notice served by Employer, Employer may, without prejudice to any other rights it may possess, terminate the Contract forthwith by giving a fifteen (15) days prior notice of termination with a copy to the Project Manager and its reasons thereof to the Contractor, referring to this clause GCC 14.2.1.

a) If the Contractor becomes bankrupt or insolvent, has a receiving order issued against it, compounds with its creditors, or, if the Contractor is a corporation, a resolution is passed or order is made for its winding up (other than a voluntary liquidation for the purposes of amalgamation or reconstruction), a receiver is appointed over any part of its undertaking or assets, or if the Contractor takes or suffers any other analogous action in consequence of debt;

b) If the Contractor assigns or transfers or sub-Contracts the Contract in whole or in part or any right or interest therein in violation of the provision of 1.51.5.1;

c) If the Contractor, in the judgement of Employer has engaged in fraud or corruption, as defined in 1.31.6 in competing for or in executing the Contract;

d) If the Contractor has abandoned or repudiated the Contract for more than 30 days;

e) If the Contractor has, without valid reasons, failed to commence the Works promptly or has suspended (other than pursuant to 14.5.414.5.4) the progress of Contract performance for more than twenty-eight (28) days after receiving a written instruction from Employer to proceed;

f) If the Contractor persistently fails to execute the Contract in accordance with the Contract or persistently neglects to carry out its obligations under the Contract without just cause and does not make good such failure or neglect within reasonable period even after a written notice by the Project Manager;

g) If the Contractor refuses or is unable to provide required/sufficient materials, services, equipment or manpower to execute and complete the Works in the manner specified in the program furnished under 3.143.14.1 at rates of progress that give reasonable

assurance to Employer that the Contractor can attain completion of the Works by the Time for Completion as extended;

h) If the liquidated damages to be levied in terms of the provisions under GCC 8.4.1 has reached a maximum of ten percent (10%) of the Contract Price and it appears to the Project Manager that the Contractor is unable to complete the Works.

14.2.2. Upon receipt of the notice of termination under GCC 14.1 and GCC 14.2, the Contractor shall, either immediately or upon such date as is specified in the notice of termination:

a) Cease all further work, except for such work as Employer may specify in the notice of termination for the sole purpose of protecting that part of the Works already executed, or any work required to leave the Site in a clean and safe condition;

b) Terminate all subcontracts, except those to be assigned to Employer pursuant to paragraph (d)(ii) below;

c) Remove all Contractor's Equipment from the Site, repatriate the Contractor's and its subcontractors' personnel from the Site, remove from the Site any wreckage, rubbish and debris of any kind, and leave the whole of the Site in a clean and safe condition;

d) In addition, the Contractor, subject to the payment specified in GCC.14.4, shall:

(i) Deliver to Employer the parts of the Works executed by the Contractor up to the date of termination;

(ii) To the extent legally possible, assign to Employer all right, title and benefit of the Contractor to the Works and to the plant, equipment or material as at the date of termination, and, as may be required by Employer, in any subcontracts concluded between the Contractor and its subcontractors;

(iii) Deliver to Employer all non-proprietary drawings, specifications and other documents prepared by the Contractor or its subcontractors as at the date of termination in connection with the Works.

14.2.3. Upon termination under GCC 14.2, Employer may expel the Contractor, and complete the Works itself or by employing any third party. Employer may, to the exclusion of any right of the Contractor over the same, take over and use any Contractor's equipment owned by the Contractor and at site in connection with the Works for such reasonable period, as Employer considers expedient for the completion of the work. However, in doing so, Employer shall pay a fair rental rate to the Contractor, bear all the maintenance costs and indemnify the Contractor for all liability including damage or injury to persons arising out of Employer's use of such equipment. Upon completion of the Works or at such earlier date as Employer thinks appropriate, Employer shall give notice to the Contractor that such Contractor's Equipment shall be returned to the Contractor at or near the Site and shall return such Contractor's Equipment to the Contractor in accordance with such notice. The Contractor shall thereafter without delay and at its cost remove or arrange removal of the same from the Site.

14.3. Termination by Contractor

14.3.1. The Contractor may terminate the Contract forthwith by giving a notice to Employer to that effect, referring to this clause 14.3.1, if Employer becomes bankrupt or insolvent, has a receiving order issued against it, compounds with its creditors, or, being a corporation, if a resolution is passed or order is made for its winding up (other than a voluntary liquidation for the purposes of amalgamation or reconstruction), a receiver is appointed over any part of its undertaking or assets, or if Employer takes or suffers any other analogous action in consequence of debt.

14.3.2. If the Contract is terminated under 14.3.1, then the Contractor shall immediately:

a) Cease all further work, except for such work as may be necessary for the purpose of protecting that part of the Works already executed, or any work required to leave the Site in a clean and safe condition;

b) Terminate all subcontracts, except those to be assigned to Employer pursuant to paragraph (d)(ii) below;

c) Remove all Contractor's Equipment from the Site and repatriate the Contractor's and its subcontractor's personnel from the Site;

d) In addition, the Contractor, subject to the payment specified in GCC 14.4, shall

(i) Deliver to Employer the parts of the Works executed by the Contractor up to the date of termination;

(ii) To the extent legally possible, assign to Employer all right, title and benefit of the Contractor to the Works and to the plant, equipment or materials as of the date of termination, and, as may be required by Employer, in any subcontracts concluded between the Contractor and its subcontractors;

(iii) Deliver to Employer all non-proprietary drawings, specifications and other documents prepared by the Contractor or its subcontractors as of the date of termination in connection with the Works.

14.4. Payment upon Termination

14.4.1. If the Contract is terminated because of a fundamental breach of Contract by the Contractor, the Project Manager shall issue a certificate for the value of the work done and Materials ordered less advance payments received up to the date of the issue of the certificate and less the percentage to apply to the value of work not completed, as indicated in the SCC. If the total amount due to the Employer exceeds any payment due to the Contractor, the difference shall be a debt payable by the Contractor to the Employer.

14.4.2. If the Contract is terminated for the Employer's convenience or because of a fundamental breach of Contract by the Employer, the Project Manager shall issue a certificate for the value of the work done, Materials ordered, the reasonable cost of removal of Equipment,

repatriation of the Contractor's personnel employed solely on the Works, and the Contractor's costs of protecting and securing the Works, and less advance payments received up to the date of the certificate.

14.5. Suspension

14.5.1. Employer /Project Manager may, by notice to the Contractor, order the Contractor to suspend performance of any or all of its obligations under the Contract. Such notice shall specify the obligation of which performance is to be suspended, the effective date of the suspension and the reasons thereof. The Contractor shall thereupon suspend performance of such obligation (except those obligations necessary for the care or preservation of the Works) until ordered in writing to resume such performance by the Project Manager/ Employer.

14.5.2. If, by virtue of a suspension order given by the Project Manager/ Employer, the Contractor's performance of any of its obligations is suspended for an aggregate period of more than ninety (90) days, then at any time thereafter and provided that at that time such performance is still suspended, the Contractor may give a notice to the Project Manager requiring that Employer shall, within twenty-eight (28) days of receipt of the notice, order the resumption of such performance or request and subsequently order a Change in the Works in accordance with GCC 12.2, excluding the performance of the suspended obligations from the Contract.

14.5.3. If Employer fails to do so within such period, the Contractor may, by a further notice to the Project Manager, elect to treat the suspension, where it affects only a part of the Works, as a deletion of such part of the Works in accordance with GCC 12.2 or, where it affects the whole of the Works, as termination of the Contract under 14.1.

14.5.4. Under the condition (a) and (b) below, the Contractor may, by giving fourteen (14) days' notices to Employer suspend performance of all or any of its obligations under the Contract, or reduce the rate of progress:

a) If Employer has failed to pay the Contractor any sum due under the Contract within the specified period, or has failed to approve any invoice or supporting documents without just cause or commits a substantial breach of the Contract, the Contractor may give a notice to Employer that requires payment of such sum, requires approval of such invoice or supporting documents, or specifies the breach and requires Employer to remedy the same, as the case may be. If Employer fails to pay such sum, fails to approve such invoice or supporting documents or give its reasons for withholding such approval, or fails to remedy the breach or take steps to remedy the breach within fourteen (14) days after receipt of the Contractor's notice; or

b) If the Contractor is unable to carry out any of its obligations under the Contract for any reason attributable to Employer, including but not limited to Employer's failure to provide possession of or access to the Site or other areas in accordance with 2.3.2, or failure to obtain any governmental permit necessary for the execution and/or completion of the Works;

14.5.5. If the Contractor's performance of its obligations is suspended or the rate of progress is reduced pursuant to this clause GCC 14.5, then the Time for Completion shall be extended in accordance with GCC 8.3.1, and any and all additional costs or expenses incurred by the Contractor as a result of such suspension or reduction shall be paid by Employer to the Contractor in addition to the Contract Price, except in the case of suspension order or reduction in the rate of progress by reason of the Contractor's default or breach of the Contract.

14.5.6. During the period of suspension, the Contractor shall not remove from the Site any plant, equipment, material or any part of the Works or any Contractor's Equipment, without the prior written consent of Employer.

15. Care of the Works and Indemnities

15.1. Protection of Works

15.1.1. The Contractor shall have total responsibility for protecting the Works till it is finally taken over by Employer. No claim shall be entertained by Employer for any damage or loss to the Works and the Contractor shall be responsible for the complete restoration of the damaged works/equipment to its original condition to comply with the specification and drawings.

15.1.2. The Contractor shall, in connection with the Works, provide and maintain at his own cost all lights, guards, fencing and security when and where necessary or required by Employer or by any authority for the protection of the Works or for the safety and convenience of the public or others.

15.2. Copyright

15.2.1. The copyright of all drawings, documents and other materials containing data and information furnished to Employer by the Contractor shall remain vested in the Contractor, or, if they are furnished to Employer directly or through the Contractor by any third party, including suppliers of materials, the copyright in such materials shall remain vested in such third Party.

15.3. Confidential Information

15.3.1. Employer and the Contractor shall keep confidential and shall not, without the written consent of the other Party hereto, divulge to any third party any documents, data or other information furnished directly or indirectly by the other Party hereto in connection with the Contract, whether such information has been furnished prior to, during or following completion or termination of the Contract. Notwithstanding the above, the Contractor may furnish to its Sub-vendors such documents, data and other information as it receives from Employer to the extent required for the Sub-vendors to perform its obligations under the Contract, in which event the Contractor shall be under obligation to have a clause in the Contracts with their sub vendors regarding confidentiality similar to that provided herein.

15.3.2. Employer shall not use such documents, data and other information received from the Contractor for any purposes unrelated to the Contract. Similarly, the Contractor shall not

use such documents, data and other information received from Employer for any purpose other than the design, procurement of plant and equipment, construction or such other work and services as are required for the performance of the Contract.

15.3.3. The obligation of a Party under 15.3.1 and 15.3.2 above, however, shall not apply to information that:

a) Employer or the Contractor needs to share with the RGoB;

b) Is already in public domain now, or enters the public domain during the execution of the Contract through no fault of that Party;

c) Can be proven to have been possessed by that Party at the time of disclosure and which was not previously obtained, directly or indirectly, from the other Party; or

d) Otherwise lawfully becomes available to that Party from a third party that has no obligation of confidentiality.

15.3.4. The above provisions of GCC 15.3 shall not in any way modify any undertaking of confidentiality given by either of the Parties hereto prior to the date of the Contract in respect of the performance of the Contract or any part thereof.

15.3.5. The provisions of GCC 15.3 shall survive completion or termination, for whatever reason, of the Contract.

15.4. Patent Indemnity

15.4.1. The Contractor shall, subject to Employer's compliance with 15.4.2, indemnify and hold harmless Employer and its employees from and against any and all suits, actions or administrative proceedings, claims, demands, losses, damages, costs and expenses of any nature, including attorney's fees and expenses, which Employer may suffer as a result of any infringement or alleged infringement of any patent, utility model, registered design, trademark, copyright or other intellectual property right registered or otherwise existing at the date of the Contract by reason of:

a) The execution of the Works by the Contractor or the use of the Works in the Kingdom of Bhutan; and

b) The sale in any country of the products produced by the Works.

15.4.2. Such indemnity shall not cover any use of the Works or any part thereof other than for the purpose indicated by or reasonably to be inferred from the Contract, neither any infringement resulting from the use of the Works or any part thereof, or any products produced thereby in association or combination with any other equipment, plant or materials not supplied by the Contractor, pursuant to the Contract.

15.4.3. If any proceedings are brought or any claim is made against Employer arising out of the matters referred to in 15.4.1, Employer shall promptly give the Contractor notice thereof,

and the Contractor may at its own expense and in Employer's name conduct such proceedings or claims and any negotiations for the settlement of any such proceedings or claims.

15.4.4. If the Contractor fails to notify Employer within thirty (30) days after receipt of such notice that it intends to conduct any such proceedings or claims, then Employer shall be free to conduct the same on its own behalf at the cost of the Contractor.

15.4.5. Employer shall, at the Contractor's request, provide all available assistance to the Contractor in conducting such proceedings or claim, and shall be reimbursed by the Contractor for all reasonable expenses incurred in so doing.

15.4.6. Employer shall indemnify and hold harmless the Contractor and its employees from and against any and all suits, actions or administrative proceedings, claims, demands, losses, damages, costs and expenses of any nature, including attorney's fees and expenses, which the Contractor may suffer as a result of any infringement or alleged infringement of any patent, utility model, registered design, trademark, copyright or other intellectual property right registered or otherwise existing at the date of the Contract arising out of or in connection with any design, data, drawing, specification or other documents or materials provided or designed by or on behalf of Employer.

15.5. Limitations of Liability

15.5.1. In cases of gross negligence or willful misconduct:

a) Neither Party shall be liable to the other Party, whether in Contract, tort or otherwise, for any indirect or consequential loss, damage, loss of use, loss of production, or loss of profits or interest costs. However, this exclusion shall not apply to any obligation of the Contractor to pay liquidated damages to Employer; and

b) The aggregate liability of the Contractor to Employer, whether under the Contract, in tort or otherwise, shall not exceed the total Contract Price. However, this limitation shall not apply to the cost of repairing or repairing defective works, or to any obligation of the Contractor to indemnify Employer with respect to patent infringement.

15.5.2. In all cases, the Party claiming a breach of Contract or a right to be indemnified in accordance with the Contract shall be obliged to take all reasonable measures to mitigate the loss or damage.

15.6. Indemnification Employer

15.6.1. The Contractor shall indemnify and hold harmless Employer and its employees from and against any and all suits, actions or administrative proceedings, claims, demands, losses, damages, costs, and expenses of whatsoever nature, including attorney's fees and expenses, in respect of the death or injury of any person or loss of or damage to any property (other than the Works whether accepted or not), arising in connection with the execution of Works and caused due to the negligence of the Contractor or its subcontractors, or its employees,

or agents. For any injury, death or damages to property caused by the negligence of Employer, its other Contractors, employees, or agents Employer shall be responsible.

15.6.2. If any proceedings are brought or any claim is made against Employer that might subject the Contractor to liability under 15.6.1, Employer shall promptly give the Contractor a notice thereof and the Contractor shall at its own expense and in the Employer s name conduct such proceedings or claim and any negotiations for the settlement of any such proceedings or claim.

15.6.3. If the Contractor fails to notify Employer within twenty-eight (28) days after receipt of such notice that it intends to conduct any such proceedings or claim, then Employer shall be free to conduct the same on its own behalf. Unless the Contractor has so failed to notify Employer within the twenty-eight (28) day period, Employer shall make no admission that may be prejudicial to the defense of any such proceedings or claim.

15.6.4. Employer shall, at the Contractor's request, afford all available assistance to the Contractor in conducting such proceedings or claim, and shall be reimbursed by the Contractor for all reasonable expenses incurred in so doing.

15.6.5. Employer shall indemnify and hold harmless the Contractor and its employees and subcontractors from any liability for loss of or damage to property of Employer, other than the Works not yet taken over, that is caused by fire, explosion or any other perils, in excess of the amount recoverable from insurances procured under GCC.17, provided that such fire, explosion or other perils were not caused by any act or failure of the Contractor.

15.6.6. The Party entitled to the benefit of an indemnity under this clause shall take all reasonable measures to mitigate any loss or damage, which has occurred. If the Party fails to take such measures, the other party's liabilities shall be correspondingly reduced.

16. Exceptional Event (Force Majeure)

16.1. "Force Majeure" shall mean any unavoidable event beyond the reasonable control of Employer or of the Contractor, as the case may be, and which has impeded the progress of work unreasonably and shall include, without limitation to the following:

a) War, hostilities or warlike operations whether a state of war be declared or not, invasion, act of foreign enemy and civil war;

b) Rebellion, terrorism, revolution, sabotage by persons other than the Contractor's personnel, insurrection, mutiny, usurpation of civil or military government, conspiracy, riot, civil commotion and terrorist acts;

c) Riot, commotion, disorder, strike or lockout by persons other than the Contractor's personnel;

d) Munitions of war, explosive materials, ionizing radiation or contamination by radio-activity, except as may be attributable to the Contractor's use of such munitions, explosives, radiation or radio-activity;

e) Confiscation, nationalization, mobilization, commandeering or requisition by or under the order of any government or de jure or de facto authority or ruler or any other act or failure to act of any government authority;

f) Embargo, import restriction, port congestion, industrial dispute, shipwreck, shortage or restriction of power supply, epidemics/pandemic, quarantine and plague;

g) Natural catastrophes such as earthquake, hurricane, typhoon, volcanic activity, fire, landslide or flood;

h) The physical conditions or artificial obstructions on the Site.

16.2. If a force majeure situation arises, the Bidder shall notify the Employer in writing within seven (7) days of such conditions and the cause thereof along with documentary or pictorial evidence acceptable to the Employer. Unless otherwise directed by the Employer in writing, the Bidder shall continue to perform its obligation.

16.3. The Party who has given such notice shall be excused from the performance or punctual performance of its obligations under the Contract for so long as the relevant event of Force Majeure continues and to the extent that such Party's performance is prevented, hindered or delayed. The Time for Completion shall be extended in accordance with GCC 8.3.

16.4. The Party or Parties affected by the event of Force Majeure shall use reasonable efforts to mitigate the effect thereof upon its or their performance of the Contract and to fulfil its or their obligations under the Contract so far as reasonably practicable.

16.5. Delay or non-performance by either Party hereto caused by the occurrence of any event of Force Majeure after the Contract has become effective shall not:

a) Constitute a default or breach of the Contract;

b) Give rise to any claim for damages or additional cost or expense occasioned thereby.

16.6. If the performance of the Contract is substantially prevented, hindered or delayed for a single period of more than sixty (60) days or an aggregate period of more than one hundred and twenty (120) days on account of one or more events of Force Majeure during the currency of the Contract, the Parties shall attempt to develop a mutually satisfactory solution, failing which the dispute shall be resolved in accordance with 2.

16.7. Notwithstanding 16.5, Force Majeure shall not apply to any obligation of Employer to make payments to the Contractor herein.

17. Insurance

17.1. The Contractor shall provide, in the joint names of the Employer and the Contractor, insurance cover from the date of commencement of the Works to the end of the respective periods specified below, in the amounts and deductibles stated in the SCC for the following events:

Sl.	Nature of insurance	Period of insurance coverage
i	Loss of or damage to the Works including Employer issued materials, if any	Up to the date of Taking Over of the last Works
ii	Loss of or damage to the Contractor's tools and plant	Up to the date of Taking Over of the last Works
iii	Loss of or damage to the property other than Works including those of third parties	Up to the completion of the Defects Liability Period
iv	Injury or death of personnel belonging to the Contractor, Employer or any other party	Up to the completion of the Defects Liability Period

The insurance policy for (iv) above shall be taken from Bhutanese insurance companies.

17.2. Policies and certificates for insurance shall be delivered by the Contractor to the Project Manager for the Project Manager's approval before the start date. All such insurance shall provide for compensation to be payable in the types and proportions of currencies required to rectify the loss or damage incurred. Payments received from insurers shall be used for the rectification of loss or damage.

17.3. If the Contractor does not provide any of the policies and certificates required, the Employer may affect the insurance which the Contractor should have provided and recover the premiums the Employer has paid from payments otherwise due to the Contractor or, if no payment is due, the payment of the premiums shall be a debt due from the Contractor to the Employer.

17.4. Alterations to the terms of insurance shall not be made without the approval of the Project Manager. Both parties shall comply with any conditions of the insurance policies.

18. Claims

18.1. Contractor's Claims

18.1.1. If the Contractor considers himself to be entitled to any extension of the Time for Completion and/or any additional payment, under any clause of GCC.18 or otherwise in connection with the Contract, the Contractor shall give notice to Employer, describing the event or circumstances giving rise to the claim. The notice shall be given as soon as practicable, and not later than thirty (30) days after the Contractor became aware, or should have become aware, or the event or circumstance.

18.1.2. If the Contractor fails to give notice of a claim within such period of thirty (30) days, the Time for Completion shall not be extended, the Contractor shall not be entitled to additional payment, and Employer shall be discharged from all liability in connection with the claim. Otherwise, the following provisions of this sub-clause shall apply.

18.1.3. The Contractor shall also submit any other notices which are required by the Contract, and supporting particulars for the claim, as relevant to such event or Circumstances.

18.1.4. The Contractor shall keep such contemporary records as may be necessary to substantiate any claim, either on the Site or at another location acceptable to the Project Manager.

Without admitting the Employer's liability, the Project Manager may, after receiving any notice under this sub-clause, monitor the record-keeping and/or instruct the Contractor to keep further contemporary records. The Contractor shall permit the Project Manager to inspect all these records, and shall (if instructed) submit copies to the Project Manager.

18.1.5. Within forty-two (42) days after the Contractor became aware (or should have become aware) of the event or circumstances giving rise to the claim, or within such other period as may be proposed by the Contractor and approved by the Project Manager, the Contractor shall send to the Project Manager a fully detailed claim which includes full supporting particulars of the basis of the claim and for the extension of time and/or additional payment claimed. If the event or circumstance giving rise to the claim has a continuing effect:

a) this fully detailed claim shall be considered as interim;

b) the Contractor shall send further interim claims at monthly intervals, giving the accumulated delay and/or amount claimed, and such further particulars as the Project Manager may reasonably require; and

c) the Contractor shall send a final claim thirty (30) days after the end of the effects resulting from the event or circumstances, or within such other period as may be proposed by the Contractor and approved by the Project Manager.

18.1.6. Within forty-two (42) days after receiving a claim or any further particulars supporting a previous claim, or within such other period as may be proposed by the Project Manager and approved by the Contractor, the Project Manager shall respond with approval, or with disapproval and detailed comments. He may also request any necessary further particulars, but shall nevertheless give his response on the principals of the claim within such time.

18.1.7. Each payment certificate shall include such amounts for any claim as have been reasonably substantiated as due under the relevant provision of the Contract. Unless and until the particulars supplied are sufficient to substantiate the whole of the claim, the Contractor shall only be entitled to payment for such part of the claims, as he has been able to substantiate.

18.1.8. The Project Manager shall proceed to determine (i) the extension (if any) of the Time for Completion (before or after its expiry), and/or (ii) the additional payment (if any) to which the Contractor is entitled under the Contract.

18.1.9. The requirements of this sub-clause are in addition to those of any other sub-clause, which may apply to a claim. If the Contractor fails to comply with this or any other sub-clause in relation to any claim, any extension of time and/or additional payment shall take account of the extent (if any) to which the failure has prevented or prejudiced proper investigation of the claim, unless the claim is excluded under the second paragraph of this sub-clause.

18.2. Claims towards idling of resources

18.2.1. Components of claim admissible hereunder towards additional cost incurred by the Contractor due to idling of resources in connection with execution of Contract for reasons given hereunder shall be evaluated by the Project Manager:

a) Employer does not give possession to Site or a part of the Site free of all encumbrances by the Site possession date stated in the SCC;

b) Employer modifies the schedule of other Contractors in a way which affects the works of the Contractor under the Contract;

c) Employer's representatives' does not issue Drawings, Technical Specifications or instructions required for the execution of Works as per agreed schedule;

d) Other Contractors or Employer does not work within the dates stated in the Contract that cause delay or extra work to the Contractor.

18.2.2. The evaluation of compensation towards idling of resources done by the Project Manager shall be final and binding on the Contractor. The procedure as provided in GCC.17.1 for settlement of claims shall also apply for such claims.

18.3. Early Warning

18.3.1. The Contractor shall warn the Project Manager in writing at the earliest of specific likely future events or circumstances that may adversely affect the quality of the work, increase the Contract Price or delay the execution of the Works. The Project Manager may require the Contractor to provide an estimate of the expected effect of the future event or circumstance on the Contract Price and Completion Date. The estimate shall be provided by the Contractor not later than 30 days after the Contractor became aware, or should have become aware, of the event or circumstance. If the Contractor fails to give notice of a claim within such period of 30 days, the Employer may be discharged from all liability in connection with the claim.

19. Disputes and Arbitrations

19.1. Amicable Settlement

19.1.1. If any dispute of any kind whatsoever arises between Employer and the Contractor in connection with or arising out of the Contract, including without prejudice to the generality of the foregoing, any question regarding its existence, validity or termination, or the execution of the works – whether during the progress of the works or after their completion and whether before or after the termination, abandonment or breach of the Contract – the parties shall seek to resolve any such dispute or difference by mutual consultation.

19.2. Dispute Resolution

19.2.1. In case of dispute, the objecting party may file a written Notice of dispute to the other Party providing in detail the basis of the dispute. The Party receiving the Notice of Dispute shall consider it and respond in writing within 14 days after receipt. If that Party fails to respond within 14 days, or the dispute cannot be amicably settled within 14 days following the response of that Party, clause GCC.19.2.2 shall apply.

19.2.2. Any dispute between the Parties as to matters arising pursuant to this Contract that cannot be settled amicably according to clause GCC.19.2.1 and GCC.19.2.2 may be submitted by either Party for settlement in accordance with the provisions specified in the SCC.

19.2.3. Notwithstanding any reference to the settlement of dispute settlement herein:

a) The Parties shall continue to perform their respective obligations under the Contract unless they otherwise agree; and

b) Employer shall pay the Contractor any monies due to it.

SECTION V – SPECIAL CONDITIONS OF CONTRACT

Special Conditions of Contract

The following Special Conditions of Contract (SCC) shall supplement and/or amend the General Conditions of Contract (GCC). Whenever there is a conflict, the provisions herein shall prevail over those in the GCC.

<table>
<tr><th>GCC Clause Ref., if any</th><th>Particulars</th></tr>
<tr><td>1.1.1 (xxvii)</td><td>The Project Manager shall be: Senior Manager, Electrification Division, DCD, BPC, Thimphu.</td></tr>
<tr><td>1.1.1 (xxix)</td><td>The Site is located from Chukha Dzongkhag.</td></tr>
<tr><td>1.1.1 (xxxi)</td><td>Completion of Works shall be attained within
<table>
<tr><th>Package Name</th><th>Work Name</th><th>Contract Duration (Months)</th></tr>
<tr><td>A</td><td>Labour Contract for Permanent Power Supply Arrangement to Amochhu Quarantine Center at Phuentsholing under Chukha Dzongkhag</td><td>3</td></tr>
</table>
from the date of Site Handing Taking.</td></tr>
<tr><td>1.2.6 (a)</td><td>The applicable Inco terms edition shall be of: Not applicable</td></tr>
<tr><td>1.3.2</td><td>For notices, the addresses shall be:

For the Employer:

Attention: ……

Address: ……

Telephone: ……

E-mail address: ……</td></tr>
<tr><td>2.3.4</td><td>The list of manpower, equipment, raw material etc. to be provided by the Employer: Not applicable</td></tr>
<tr><td>3.2.1

3.2.3</td><td>The amount of the Performance Security shall be: 10% of the contract price.

The types of acceptable Performance Securities are:

(i) Unconditional bank guarantee issued by a reputable financial institution enforceable in any banks in Bhutan, in the form provided for in the Contract or in any other form acceptable or;

(ii) Cash warrant/Banker's Cheque or;

(iii) Demand Draft</td></tr>
</table>

3.2.2	*For Contracts not deducting retention money, the Contractor shall extend the validity of the performance security until 30 days beyond defect liability period (DLP) before the release of final bill payment.*
3.12.1	The temporary utilities to be provided by Employer are*:* **Not applicable**
5.1.1	Key Personnel: **Not applicable** **1. Site Engineer/Supervisor** The amount to be deducted for the key personnel not employed by the Contractor for each personnel shall be: **Site engineer/Supervisor- Nu. …….. per day**
8.4.1	The applicable rate for liquidated damages for delay shall be **Package Name** / **Work Name** / **LD (%) applicable** A / Labour Contract for Permanent Power Supply Arrangement to Amochhu Quarantine Center at Phuentsholing under Chukha Dzongkhag. / 0.30% **per day.** The maximum amount of liquidated damages shall be: **10% of the contract price.**
9.2.7	The permanent information board: **Not applicable**
10.1.1 10.3.2	The Defect Liability Period shall be **6 Months from the date of taking over.**
12.1.2	Contract Price Adjustment: **Not applicable**
13.1.1	The Contract Price **"is not"** adjustable.
13.2.1 (a)	The Mobilization Advance Payment shall be a maximum of ten percent **(10%)** of the Contract Price against the submission of unconditional bank guarantee issued by a reputable financial institution and enforceable by any Banks in Bhutan.
13.2.2 (a)	The secured advance **shall not be applicable.**
13.4.2	The present rate of tax deducted at source (TDS) of the gross value of the invoice is **2%.**
17.1	The nature and content, amounts and deductibles on insurance shall be as follows: *[To be altered as per the nature and value of work. Insert specific insurance provisions agreed upon, including coverage, currency and amount]* SN / Insurance / Amount Insured / Deductible 1 / Loss of or damage to the Works including Employer issued materials, if any / 110% of the cost of Works / Minimum as per insurance policy

	2	Loss of or damage to the Contractor's tools and plant	110% of the cost of tools and plant	Minimum as per insurance policy
	3	Loss of or damage to the property other than Works including those of third parties	As permissible under the policy	Not applicable
	4	Injury or death of personnel belonging to the Contractor, Employer or any other party	As permissible under the policy	Not applicable

6

Additional information to GCC clause 6:

1. Storage of Plant & Materials

The Contractor shall provide adequate and safe facilities for storing Plant and materials that will be used in the execution of the works. They must be neatly piled and compactly stored in the places that provide clear access to the site and without causing any inconvenience or create any danger to the public.

Excavated materials, wreckage and waste products, shall be disposed off quickly so as not to cause unnecessary obstruction or create sanitation/environmental problems.

The loading of materials to their trucks will also be arranged by the Contractor and will comply with the instruction issued by the Stores Officer of the Employer.

If there is any balance materials left after the completion of the works which is supplied by the Employer under the Contract, the Contractor will hand over the same to the nearest Electricity Services Division, as indicated by the Employer. The Contractor should meet all associated cost to this effect and the Employer shall not be responsible for any cost involved.

If the Contractor fails to return the balance materials in full set of each item, the Contractor shall pay Employer's purchasing cost of the items plus 50% on the purchasing cost to the Employer. Final bills shall be released only after return of all balance materials.

Any excess materials returned by the Contractor will not be taken by the Employer and paid for. And, if the Contractor is not able to return the balance materials within fifteen (15) days after physical completion of the works successfully, the Employer shall collect the balance materials at the cost and risk of the Contractor before releasing the final payment to the Contractor. However, the balance materials collected by the Employer in incomplete set shall be construed as lost or unreturned whereby its associated cost shall be deducted from any money payable to the Contractor.

2.Transportation of Materials

Materials required for the execution of the Contract are to be transported to the work sites for all packages by the Contractor at his own arrangements from the locations as indicated below.

Sl. No	Dzongkhag	Package Name	Store Location
1	Phuentsholing, Chukha	A	RSD Phuentsholing

The GEE Slabs required for substation construction shall be collected by the contractor from M/s Druk-Care Engineering Factory, Jemina, Thimphu.

	The Contractor shall transport the materials to the work sites in such a manner that materials required at the earliest will be first transported.

SECTION VI – TECHNICAL SPECIFICATIONS

CONTENTS

CHAPTER 5: CONSTRUCTION STANDARD 1

5.1 Overhead Lines 1

5.1.1 Choice of Route 1

5.1.2 Approval of Line Routes 1

5.1.3 Tree Clearances 2

5.2 Overhead Line Construction 3

5.2.1 Pit Marking and Digging Procedure 3

5.2.2 Erection of Supports 3

5.2.3 Erection of Double Pole Structures for Angle Locations 4

5.2.4 Special Foundation in Unstable Soil 4

5.2.5 Anchoring and Providing Guys for Supports 4

5.2.6 Fixing of Cross Arms and Insulators 5

5.2.7 Erection of ACSR Conductor 5

5.2.8 Mid-Span Jointing of Conductors 6

5.2.9 Jumpering 6

5.2.10 Sagging and Tensioning of Conductors 6

5.2.11 Conductor Sag and Tension 8

5.2.12 Supports at Different Elevation 11

5.2.13 Good Conductor Stringing Work Practices 12

5.2.14 HV ABC Accessories 13

5.2.15 Low Voltage Aerial Bundled Cable 14

5.3 Special Crossings 15

5.4 Guarding 15

5.5 Pole Earthing 16

5.6 Final Completion and Commissioning of MV Lines 16

5.7 Installation of Distribution Transformer 16

5.7.1 Pole Mounted Transformers 17

5.7.2 Site Selection for Pole mounted Transformers 17

5.7.3 Pad Mounted Distribution Transformers 17

5.8 Substation Earthing 18

5.9 Transportation and Handling of Transformers. 18

5.10 Protection of Distribution Transformers 19
5.11 General Requirement of Distribution Boards 21
5.12 Connection of supply to consumer's premises 24
5.12.1 Consumer Metering 24
5.12.2 Direct Connected Metering 24
5.12.3 CT Metering 25
5.12.4 High Voltage Metering 25
5.13 Underground Cable Installation 25
5.13.1 General 25
5.13.2 Outdoor Cable Installation 26
5.13.3 Bending Radii for Cables 27
5.13.4 Terminations Clamping & Miscellaneous Details 27
5.13.5 Earthing of Cables 28
LIST OF DRAWINGS 29

CHAPTER 5: CONSTRUCTION STANDARD

5.1 Overhead Lines

5.1.1 Choice of Route

The route selected for an overhead line should be the one that will give the lowest cost over the life of the line. Route selection therefore involves consideration of a number of factors, including the cost of landowner compensation, the cost of transporting materials to the site, construction cost and the cost of ongoing maintenance requirements including vegetation control. As a general rule, line routes should be as short as practicable and should run as close to a road as possible since this facilitates access for both construction and maintenance. Consideration should also be given to the location of possible future line extensions, either to supply potential new loads or to service towns and villages that are currently unelectrified. Following parameters should be kept in mind:

- The shortest route practicable.
- As close as possible to the road for easy maintenance and approach during construction.
- Route in direction of possible future load.
- Angle points should be less.

Where possible, distribution line routes should avoid steep hills or valleys, swamps, lakes, thick forests, rivers or other locations where access is difficult or long spans are required. When building along a road, pole positions should not cause a traffic hazard or be in locations where there is a higher probability of vehicle impact.

The following should be avoided wherever possible:

- Areas likely to be used for future urban development;
- Routes incorporating sharp changes in line direction;
- Routes close to aerodromes;
- Religious monuments;
- Special trees of religious significance;
- School playgrounds;
- Cemeteries; and
- Buildings containing explosives.

Construction of lines over private land involves negotiation of a right of way and payment of compensation, and is to be avoided if a cost effective alternative route along public roads is available.

5.1.2 Approval of Line Routes

Prior to the erection of lines along public roads, the authority responsible for the road should be contacted and approval obtained for the location of all poles, road crossings, tree cutting or

trimming, and guying locations. Where overhead distribution lines are to be constructed in urban areas, it will also be necessary to contact the local Town Planning Authority for approval. Where appropriate, approval should also be obtained from authorities such as the National Environment Commission, Department of Forestry, etc.

Once the line route is finalized, a detailed line survey should be undertaken and the pole locations finalized and marked. Poles should be located well clear of water and other areas of potential land subsidence. Poles for lines that cross agricultural fields should, wherever possible, be located at bunds. Procedure for Obtaining Environmental Clearance for the new project from National Environment Commission Secretariat (NECS) is given below:

- Fill in the project details in environmental clearance application guidelines for power transmission and distribution lines.
- Attached the following relevant statutory Approvals:
  1. Public Clearance from the affected parties if the tower/poles falls in Private Registered land.
  2. Gewog Approval from the concerned Gewog
  3. Forestry Clearance
  4. Dzongkhag Approval
  5. GPS Data / the google earth map of the project.
  6. Site Visit report from the Dzongkhag Environment committee (DEC).
- Submit the duly filled environmental clearance application with the aforementioned attachments to NECS for Environmental Clearance for the project through EDCD.

5.1.3 Tree Clearances

The width of line route to be cleared of trees will depend upon the voltage and the importance of the line concerned. While no rigid limits are provided, the following clearances should be adhered to, as far as possible.

Table 86: Tree Clearance Distances

Voltage	Comment
Low voltage ABC	Left to the discretion of the supervisor. Aerial bundled low voltage conductor is insulated so contact with vegetation should not cause a fault. However the route should be cleared so the risk of tress falling on the line is minimized.
11 kV lines (Bare Conductor)	The route should be cleared of all growth within 4.5 m of the centre line and, in addition, of trees that could fall and contact the line.
33 kV lines (Bare conductor)	The route should be cleared of all growth within 6 m of the centre line and in addition, of trees that could fall and contact the line.
AAAC Covered Conductor	The route should be cleared of all growth within 4.5 m of the centre line and, in addition, of trees that could fall and contact the line.

5.2 Overhead Line Construction

The construction of overhead lines may be divided as follows:

5.2.1 Pit Marking and Digging Procedure

After surveying, the pole location should be marked with peg. The pits should not be too large than necessary, as otherwise, after erection of the pole and filling there remains a possibility of tilting of pole. For Steel Tubular poles, the depth of the foundation shall be 1400 mm for 7.5 m pole and 1800 mm for 10 m pole, while the size of the foundation pit will be 600x800mm with longer axis in the direction of the line.

For Telescopic pole, the depth of the foundation shall be 1966 mm for 11.2 metre pole and 2100 mm for 12 m pole, while the size of the foundation pit shall be 800x1000 mm.

5.2.2 Erection of Supports

Steel poles that are not hot dip galvanized should be delivered to site with the exterior of the pole pre-painted with bituminous paint from the base of the pole up to ground level and rest with aluminum paint before the pole is installed.

Before the pole is put into the pit, pole cap and suitable base plate shall be fixed at the pole base to increase the surface contact between the pole and the soil. Once the pole is erected inside the pit, wooden deadmen may be utilized to facilitate lifting of the pole. Once lifted into the pit, the pole should be kept in a vertical position with the help of ropes, using them as a temporary anchor. It should be ensured that, at the time of erection, four men are at the ropes and the supervisor should be at a distance for guiding correct position so that in the event of breaking of rope, if pole falls, it will not result into an accident.

As the poles are being erected, say from an anchor point to the next angle point, the alignment of the poles is to be visually checked and set right. The verticality of the poles shall be checked with a spirit level in both transverse and longitudinal directions. In case of LV lines, the holes for fixing hook brackets should also to be checked to ensure they are facing the proper direction.

Once the verticality and alignment are satisfactory, the pit shall be backfilled and compacted to a distance of 450mm below ground level. A 450 x 450 mm (HT) & 350x350mm (LT) concrete foundation shall then be constructed around the pole and extending to 300 mm above the ground level as shown in the relevant drawings. The concrete shall be a mixture of cement, granite chips of 20/30 mm mesh and sand in the ratio of 1:2:4. The top of the foundation shall be tapered to allow water to run away from the pole.

Concrete foundations are not required for poles that are hot dip galvanised. In this case the foundation should be backfilled with excavated soil. The backfill should be progressively compacted as the foundation is filled. Do not simply refill the foundation and compact at the surface.

After the poles have been set and the excavated pit backfilled and compacted, the temporary anchors may be removed.

5.2.3 Erection of Double Pole Structures for Angle Locations

On medium voltage lines, where the angle of deviation is more than 10 degrees, a double pole structure shall generally be erected. The pits are to be excavated along the bisection of the angle of deviation. If the angle of deviation is more than 60 degree, a four pole structure is to be used as shown in drawing no. BPC-DDCS-2015-61.

After erection of the poles the pits will need to be temporarily backfilled so the poles can be climbed and the horizontal bracing fitted. The structure should then be set for verticality and alignment and the supports held in position with the help of temporary rope guys.

The temporary backfilling should be removed and permanent foundations constructed by backfilling, compacting and, if necessary, concreting each pit as described in section 5.2.2. Concrete foundations are not required if the poles are hot dipped galvanised.

Guys along the bisection of the angle of deviation, as required by the conductor size and angle of deviation, are to be provided. These shall be constructed in accordance with section 5.2.5.

5.2.4 Special Foundation in Unstable Soil

Special care has to be taken where foundation in unstable soil is encountered. In such locations, mass concrete foundations, extending the full length (below the ground) of the pole, are to be adopted to avoid collapse of foundation in the unstable soil. The concrete is to be a mixture of cement, granite chips of 20/30 mesh and sand in the ration of 1:2:4.

5.2.5 Anchoring and Providing Guys for Supports

One or more guys shall be provided for all supports where there is an unbalanced force on the support that may result in tilting/ uprooting or breaking of the support. Normally, these guys are provided at the following locations:

- Angles;
- Dead end locations;
- Tee-off points; and
- Steep gradient locations to avoid uplift on the poles.

Guy wires shall be angled at 45o from the vertical for 33 kV and 11 kV lines and 30o from the vertical for low voltage lines. Single guys shall be provided for single poles with line deviations from 5° to10° and also for double poles with line deviations not exceeding 30°. Where the angle of deviation exceeds 30°, two guys along the resultant angle of line deviation or one guy in each direction of the line shall be provided. When two or more stays are fixed to the same support, each stay should be attached separately to the pole.

The installation of guy will involve the following works:

- Excavation of pit and fixing guy rod;

- Backfilling and compacting the guy foundation;
- Fastening guy wire to the support; and
- Tightening guy wire and fastening to the anchor.

After completion of installation work the foundation shall be allowed to consolidate for at least 7 days before installation of the guy wire. When installing the guy wire, the turnbuckle shall be mounted at the pole end of the stay and guy wire so fixed that the turn buckle is half way in the working position; thus giving the maximum movement for tightening or loosening. No guy insulator shall be located less than 3 m from the ground. While binding the stay, pole should not be tilted. Thimble is necessary for stay binding. Where sufficient space is not available, the arrangement such as bow guy and stud pole support as shown in drawing no. BPC-DDCS-2015 60 may be adopted.

5.2.6 Fixing of Cross Arms and Insulators

The practice of fixing the cross arm and top hamper before the pole erection is acceptable. If the cross arm is mounted after the support is erected, all the materials or tools required should be lifted or lowered by means of the hand line.

In such case, lineman should climb the pole with necessary tools. The cross arm is then tied to a hand line and pulled up by the ground man through a pulley till the cross arm reaches the line man. The ground man should station himself on one side, so that if any material drops from the top of the pole, it may not strike him. All the materials should be lifted or lowered through the hand line, and should not be dropped. Horizontal cross arms and pole top brackets shall be fitted as shown in the relevant drawings.

Line conductors are electrically insulated from each other as well as from pole by insulators. There are two types of porcelain insulators.

- The pin type insulators are generally used for straight stretch of line. The insulator and its pin should be mechanically strong enough to withstand the resultant force due to combined effect of wind pressure and weight of the conductor in the span.

- The strain insulators are used at terminal locations or dead end locations where the angle of deviation of the line is more than 10º.

In general the tie wire should be the same kind of wire as the line wire i.e. aluminium tie wire should be used with aluminium line conductor. The tie should always be made of soft annealed wire so that it may not be brittle and injure the line conductor. A tie wire should never be used for second time. The length of the wire will vary from 1m for 11 kV insulators to 3 m for 33 kV insulators.

5.2.7 Erection of ACSR Conductor

During running out, the conductor drum should be securely supported on drum jacks with an axle, so that the conductor is pulled from the top of the drum. The drum jacks should be on a firm foundation and the axle of the drum jack should be levelled horizontally. Care must be taken to ensure that the conductors are not damaged by contact with the ground or pole hardware during

running out and that kinking, twisting or abrading the conductor is avoided. The conductor should not be trampled on, run over by vehicles or dragged over the ground.

Extreme care must be taken to avoid contact with the conductors of any other live line in the vicinity when running out or stringing conductors, and if necessary neighbouring lines should be de-energised during the stringing operation. Stays shall be installed and kept in position before conductors are strung to avoid over straining of poles. Stringing pulleys shall be used while stringing conductors.

5.2.8 Mid-Span Jointing of Conductors

Mid-span jointing of conductors shall use compression joints correctly sized for the conductor and made with a proprietary compression tool using correctly sized dies. Before jointing, the conductor ends should be properly cleaned. In case of copper, clean by sand paper and for aluminium conductor, first apply jointing compound and then brush so as to remove the aluminium oxide. Mid span joints shall be avoided in the long spans such as river crossing, valley, etc.

5.2.9 Jumpering

The jumper should always be connected through P.G. clamps. Care should be taken that mid span joint will not be less than 40 ft. from pole. Every joint should be done carefully. Where conductor strands are cut, repair sleeve is used. Conductor joint strength should be 95 % that of conductor, and resistance should be that of main conductor.

5.2.10 Sagging and Tensioning of Conductors

After completion of conductor stringing and making any mid-span joints, conductor tensioning operations can commence. The conductors are first attached to the insulator string assembly at the non-tensioning end of the section, using preformed dead-ends. Further, before tensioning commences, temporary guys should be provided as necessary for the anchoring supports at each end of the line section to be tensioned to avoid over-stressing the strain poles due to unbalanced loads.

The centre conductor should be tensioned first followed by the outer two conductors. At the tensioning end, the conductor being tensioned is pulled manually up to a certain point and then a come-along clamp is fixed to it. The grip to the come-along clamp is attached to a double sheave pulley block or a pull-tight machine and the conductor is gradually tensioned.

The conductor should then be sagged in accordance with the sag-temperature chart for the particular conductor and span. The correct sag should be measured in the middle span of the section.

The stretch of the conductor has to be taken out before sagging in order to avoid the gradual increase in sag, due to the setting down of the individual wires. There are two ways of accomplishing this:

- **Prestressing**

Using the prestressing method, the conductor is pulled unto a tension considerably above the correct figure, but never exceeding 50% of breaking load for a period of about twenty minutes. As this method requires more time and involves the use of stronger tackle to secure the higher tension, it is not commonly used.

- **Overtensioning**

The overtensioning method consists of pulling up the conductor to a tension of 5%-8% above the theoretical tension for the prevailing temperature and fixing the conductor at that tension with correspondingly reduced sag. Over time, the conductor will settle down to the correct sag and tension.

Conductors can be sagged correctly only when the tension is the same in each span throughout the entire length of the section. Use of snatch blocks during sagging reduces the friction and chances of inequality of tension in various spans.

Measurement of conductor sag can be accomplished by several different methods but most commonly used method is 'sighting'. Targets are placed on the supports below the cross arms. The targets may be light strips of wood, which are clamped to the pole at each end of the sagging span at a distance below the conductor when the conductor is placed in snatch blocks that is equal to the required sag. A lineman sights the sag from the next pole and the tension of the conductor is reduced or increased, until the lowest part of the conductor in the span coincides with the lineman's line of sight.

When sagging is completed, the preformed dead end should be fixed to the tension end. The dead-end and socket thimble can be fitted to the conductor without releasing the tension. A mark is made on the conductor at a distance from the cross arms equal to the length of the complete strain insulator to indicate where the dead-end should be installed.

After the dead-end has been installed and the insulator string attached to the top hamper or crossarm, the conductor is pulled in sufficiently using the come-along clamp, to allow the insulator assembly to be fitted to the socket thimble. After the conductor is attached, the conductor tension may be released gradually. If the tension is released with a jerk, an abnormal stress may be transferred to conductor and support, which may result in the failure of the cross arms, stay or pole.

After the stringing is completed, all poles, cross-arms, insulators, fittings, etc. should be checked to ensure that there have been no deformities, etc.

The conductor is then placed on the pin insulator on each pole ready for tying and to remove the snatch blocks. On straight line poles the conductor should be tied to the top groove of the insulator and on angle poles the conductor should be tied to the side groove. The conductor is then fastened to the insulator using aluminium helities or binding wire conforming to IS 12048.

In fastening the conductor to pin insulators, the following points should be observed:

- The correct size of binding wire, which can be readily handled, and with adequate strength should be used.

- The length of tie wire should be sufficiently long for making the complete tie including and end allowance for gripping each end.

- A good tie should provide a secure binding between the line conductor and insulator, and should reinforce the conductor on either side of the insulator.

- The use of cutting pliers for binding the tie wire should be avoided.

- A helitie or binding wire that has been used previously should not be reused.

- Before tying the conductor to the insulator, it shall be ensured that only the portion of helities wrapped with chloroprene pad (where applicable) touches the insulator.

At section poles correctly sized parallel groove (PG) clamps must be used to connect the two conductor tails.

5.2.11 Conductor Sag and Tension

The following sag-span tables are provided for the guidance of field staff when stringing conductors.

Table 87: Sag-Span Chart – 33 kV, WOLF
Conductor : WOLF
Voltage :33 kV
Design Tension : 3.42 kN at 15°C, no wind (approx 5% MBL)

Temp	10°C	15°C	25°C	30°C	75°C
Span (m)	**Sag (m)**				
40	0.37	0.42	0.51	0.55	0.70
50	0.60	0.65	0.75	0.80	0.97
60	0.88	0.94	1.04	1.09	1.28
80	1.61	1.67	1.78	1.84	2.04
100	2.55	2.62	2.73	2.79	3.27
150	5.82	6	6	6.07	6.60

Table 88: Sag-Span Chart – 33 kV, DOG
Conductor : DOG
Voltage : 33 kV
Design Tension : 1.95 kN kg at 15°C, no wind (approx 5% of MBL)

Temp	10°C	15°C	25°C	30°C	75°C
Span (m)	Sag (m)				
40	0.34	0.40	0.50	0.55	0.88
50	0.56	0.62	0.73	0.79	1.17
60	0.83	0.89	1.01	1.07	1.49

80	1.52	1.59	1.72	1.78	2.26
100	2.38	2.45	2.59	2.65	3.19
150	5.44	5.52	5.66	5.73	6.33

Table 89: Sag-Span Chart – 33 kV, RABBIT
Conductor : RABBIT
Voltage : 33 kV
Design Tension : 1.04 kN kg at 15°C, no wind (approx 5% of MBL)

Temp	10°C	15°C	25°C	30°C	50°C
Span (m)	Sag (m)				
25	0.125	0.157	0.231	0.266	0.389
30	0.187	0.227	0.310	0.350	0.488
35	0.262	0.308	0.400	0.443	0.595
40	0.352	0.403	0.501	0.547	0.712
60	0.845	0.907	1.023	1.078	1.280

Table 90: Sag-Span Chart –33 kV, AAAC Covered (111.3sq.mm)
Conductor : AAAC Covered (111.3sq.mm)
Voltage : 33 kV
Design Tension : 1.22 kN at 15°C, no wind (approx 5% MBL)

Temp	10°C	15°C	25°C	30°C	75°C
Span (m)	Sag (m)				
40	1.27	1.29	1.35	1.37	1.58
50	1.99	2.02	2.07	2.10	2.32
60	2.88	2.91	2.96	2.99	3.21
70	3.93	3.96	4.01	4.04	4.27
80	5.15	5.17	5.23	5.25	5.48
90	6.52	6.55	6.6	6.63	6.86

Table 91: Sag-Span Chart – 11 kV, DOG
Conductor : DOG
Voltage : 11 kV
Design Tension : 5.71 kN kg at 15°C, no wind (approx 17% of MBL)

Temp	10°C	15°C	25°C	30°C	75°C
Span (m)	Sag (m)				
40	0.12	0.14	0.18	0.22	0.65
50	0.19	0.21	0.28	0.33	0.84
65	0.27	0.31	0.40	0.45	1.03
80	0.49	0.54	0.68	0.75	1.46
100	0.76	0.84	1.01	1.11	1.93
150	1.76	1.88	2.14	2.26	3.33
200	3.20	3.35	3.65	3.80	5.05
250	5.06	5.23	5.57	5.74	7.13

Temp	10°C	15°C	25°C	30°C	75°C
Span (m)	Sag (m)				
300	7.35	7.54	7.90	8.07	9.57

Table 92: Sag-Span Chart – 11 kV, RABBIT
Conductor : Bare ACSR RABBIT
Voltage : 11 kV
Design Tension : 3.02 kN kg at 15°C, no wind (approx 17% of MBL)

Temp	10°C	15°C	25°C	30°C	50°C
Span (m)	Sag (m)				
25	0.047	0.054	0.076	0.093	0.220
30	0.068	0.078	0.108	0.131	0.280
35	0.093	0.106	0.146	0.174	0.344
40	0.122	0.139	0.188	0.222	0.412
60	0.278	0.313	0.404	0.460	0.720

Table 93: Sag-Span Chart –11 kV, AAAC Covered (111.3sq.mm)
Conductor : AAAC Covered (111.3sq.mm)
Voltage : 11 kV
Design Tension : 4.13 kN at 15°C, no wind (approx 17% of MBL

Temp	10°C	15°C	25°C	30°C	50°C
Span (m)	Sag (m)				
40	0.29	0.38	0.52	0.58	0.98
50	0.50	0.59	0.75	0.81	1.27
60	0.77	0.86	1.02	1.09	1.60
70	1.07	1.16	1.33	1.40	1.96
80	1.43	1.52	1.69	1.77	2.36
90	1.84	1.93	2.10	2.18	2.80
100	2.29	2.38	2.55	2.63	3.28
150	5.26	5.35	5.23	5.61	6.34

Table 94: Sag-Span Chart –11 kV, AAAC Covered (49.98sq.mm)
Conductor : AAAC Covered (49.98sq.mm)
Voltage : 11 kV
Design Tension : 2.01 kN at 15°C, no wind (approx 17% of MBL)

Temp	10°C	15°C	25°C	30°C	50°C
Span (m)	Sag (m)				
40	0.31	0.40	0.53	0.59	0.98
50	0.53	0.62	0.77	0.83	1.28
60	0.80	0.89	1.04	1.11	1.62
70	1.12	1.21	1.37	1.44	1.99
80	1.50	1.58	1.74	1.82	2.40
90	1.92	2.00	2.17	2.24	2.85

100	2.39	2.47	2.64	2.72	3.35
150	5.48	5.56	5.73	5.82	6.52

Table 95: Sag-Span Chart – HV ABC (95sq.mm)
Conductor : HV ABC (95sq.mm)
Voltage : 11 kV
Design Tension : 3.72 kN at 15ºC, no wind (approx 5% of MBL)

Temp	10ºC	15ºC	25ºC	30ºC	50ºC
Span (m)	Sag (m)				
20	0.53	0.54	0.55	0.56	0.54
30	1.21	1.21	1.23	1.24	1.21
40	2.15	2.16	2.17	2.18	2.16
50	3.33	3.37	3.46	3.50	3.37
60	4.84	4.85	4.87	4.88	4.85
70	6.60	6.60	6.62	6.63	6.60

Table 96: Sag-Span Chart – HV ABC (50sq.mm)
Conductor : HV ABC (50sq.mm)
Voltage : 11 kV
Design Tension : 2.01 kN at 15ºC, no wind (approx 17% of MBL)

Temp	10ºC	15ºC	25ºC	30ºC	50ºC
Span (m)	Sag (m)				
40	0.31	0.40	0.53	0.59	0.74
50	0.53	0.62	0.77	0.83	1.00
60	0.80	0.89	1.04	1.11	1.30
70	1.12	1.21	1.37	1.44	1.65
80	1.50	1.58	1.74	1.82	2.03
90	1.92	2.00	2.17	2.24	2.46
100	2.39	2.47	2.64	2.72	2.94
150	5.48	5.56	5.73	5.82	6.06

5.2.12 Supports at Different Elevation

Where the supports at each end of a span are at different elevations the following formula can be used for sagging the conductor.

$$d1 = d(1-h/4d)2$$

where: d1 = vertical distance between the conductor at the lower support and the lowest mid-span point.

d = sag for a level span equal to the slope distance between the poles. The slope distance is the distance that would be measured by a tape stretched between the two poles. Once this is

known the value of d can be taken from table 78 to table 88 above.

h = difference in height between the conductor at each end of the span.

The above formula can be used to determine the value of d1. A sighting board can then be attached to the lower support pole and the conductor sagged be sighting horizontally through it. One way to do this would be to attach a second sighting board to the next pole. Check that the two sighting boards are level using a taut line and spirit level. The sag can then be sighted using the two sighting boards.

5.2.13 Good Conductor Stringing Work Practices

DO:

- Use proper equipment for handling aluminium conductors at all times.
- Use skids, or similar method for lowering reels or coils from transport to ground.
- Examine the reel before unreeling for presence of nails or any other object, which might damage the conductor.
- Rotate the reel or coil while unwinding the conductor.
- Unwind the conductor in the direction of the arrow on the side of the drum
- Grip all strands when pulling out the conductor.
- Control the unreeling speed with a suitable braking arrangement.
- Use wooden guards of suitable type to protect the conductor when pulling it over barbed wire fences, sharp rock edges or similar obstructions.
- Use long straight, parallel jaw grips with suitable liners when pulling the conductor in order to avoid nicking or kicking of the conductors.
- Use free-running sheaves or blocks with adequate grooves for drawing/paying conductors.
- Measure temperatures accurately with an accurate thermometer.
- Use proper sag charts.
- Mark conductors with crayons or adhesive tape or such other material which will not damage the strand.
- Make all splicing with the proper tools.

DO NOT

- Do not handle conductors without proper tools at any stage.
- Do not pull conductors without first ensuring that there are no obstructions on the ground.
- Do not pull out a greater quantity of conductor than is required.
- Do not make jumper connections on dirty or weathered conductor. Instead, clean the conductor with sandpaper. Alternatively apply a chromite or graphite conducting oxideinhibiting grease to the point of connection and then clean the conductor with a wire brush.

- Do not handle aluminium conductor in a rough fashion but handle it with care it deserves.

At road crossings, a flagman should be in attendance to that traffic is not unduly interrupted. The running of conductor across roads should only be carried out in with the approval of the Authority responsible for the road.

Conductor drums should be transported to the tension point without injuring the conductor. If, it is necessary to roll the drum on the ground for a small distance, it should be slowly rolled in the direction of the arrow marked on the drum.

When running out conductor the drum should be so supported that it can be rotated freely. For this purpose, the drum should either be mounted on the cable drum supports or jacks or hung by means of chain pulley of suitable capacity, suspended from a tripod. If it is not possible to raise the conductor drum by any of the above methods, a trench of suitable depth slightly bigger than the conductor drum may be dug, so as to facilitate free rotation of the drum when it is suspended above the trench using a steel shaft. While running out the conductor, care should be taken to ensure that the conductor does not rub against any metallic fitting of the pole or on the uneven or rocky ground. Wooden trusses may be used for this purpose to support the conductor when running out.

Should the length the conductor be less than the length of the section, the conductors should be run out from both ends and joined where they meet with a mid-span full tension joint.

On no account, should any part of the conductor shall be left overnight at a height of less than 5 metres above the ground. The work should be so arranged that before the end of the day, the conductor is raised to a minimum height of 5 metres above the ground by rough sagging.

5.2.14 HV ABC Accessories

The following accessories are required for the installation of the HV aerial bundled cables:

- Pole bracket assembly
- Suspension assembly
- Strain clamp/dead end assembly.
- GI support hook
- Bundled restraint assembly

Each assembly shall be complete with all necessary devices suitable for attachment to round steel poles by stainless steel strap. All metal fitting shall be of good quality galvanized mild steel or cast aluminum alloy. Each of the suspension/angle/dead end assemblies shall be supplied with a 1.75m of stainless steel strap with two buckles. Bundled end protection shall be provided for protecting cable dead ends and shall comprise a set of heat shrinkable polymeric terminal caps for fitting on each conductor, together with protective black PVC sleeve of 500mm length. The following connectors are required for the connection of HV aerial bundled conductors:

(a) Insulated tension jointing sleeve
(b) XLPE cable termination push on type

The connections shall be insulated and suitable for use on live lines. The teeth of the contact plates shall penetrate the bundled conductor insulation to establish contact with ABC cable without the need to strip the bundled conductor insulation. The connector shall be suitable for copper or aluminum tee-off conductor. Insulated tension jointing sleeves shall be provided for the bundled conductors. These shall be of the compression type, but compression shall not damage or displace the sleeve insulation. The sleeve connectors shall be designed to have the full rated breaking strength of the aluminium or aluminium alloy cable on which they are fitted.

5.2.15 Low Voltage Aerial Bundled Cable

A sag-span chart for ABC conductor, assuming typical installation conditions is given in table below.

Table 97: Sag-Span Chart for Low Voltage ABC

Conductor Size	**50mm^2**		**95mm^2**	
Design Tension at 15^{0}C (kN)	**2.52**	**5.04**	**4.79**	**9.58**
Span (m)	Sag (m)			
30	0.15			
40	0.26			
50	0.41			
60	0.59			
70	0.80			
80	1.04			
90	1.32			
100	1.63			
110	1.97			
120	2.35			
130	2.75			

BPC uses 7.5 m poles to support ABC conductors, and the maximum allowable span length on level ground is shown in table 90 below. The table assumes the cable is located 150 mm from the top of the pole, depth of burial is 1/6 of pole length and that minimum ground clearances are as shown in table 98.

Table 98: Maximum Spans for Aerial Bundled Cable

Pole Length (m)	**Maximum Span (m)**	
	Across Street	**Elsewhere**
7.5	50	80 (4 core)
		100 (2 core)

In installing aerial bundled cable the cable must be pulled from the top of the drum and should not be dragged along the ground. A suitable 'drum brake' mechanism should be used to prevent conductor overrun. Stringing pulleys compatible with bundled conductor shall be installed on every pole. During running out, the cable should be pulled out by hand or by using a nylon pulling grip designed for bundled cables. Insulated conductor grips designed to prevent damage to the

insulation of the conductor shall be used for tensioning. Every care must be taken to avoid damage to the conductor insulation.

Dead-end (termination) fittings shall be fitted to the conductor after tensioning at each termination point. Intermediate fittings shall then be fitted at major angles and then at smaller angles. After all fittings are in place the sagging should be checked at two places and corrected if necessary. Insulation straps (cable ties) shall be used to tie the conductor at each supporting point.

5.3 Special Crossings

In case the lines cross-over the other lines or buildings, safe minimum clearance are to be maintained as mentioned in table 9. The other crossings could also include for:

- Telephone lines
- Lines of other voltages
- Roads, streets and rivers.

Double pole or 3 pole or 4 pole structure would be required to be specially designed, depending upon the span and conductor size for the river crossing. The foundation of the structures should be sound so that it may not get eroded or damaged due to rain water. 12 m steel tubular pole shall be used in such situation.

5.4 Guarding

Guarding is an arrangement provided for the lines by which live conductor, when accidently broken is prevented to come in contact with other electric lines, telephone lines, roads and persons or animals and carriages moving along the road, by providing a sort of cradle below the main electric line. The guarding is always earthed. In absence of guarding, conductor will fall on ground and as no protection is operated, conductor will remain charged. This will cause accidents. Hence the guarding is very essential.

Cradle guarding is adopted for lines with bare conductor at road crossing based on the risk imposed to pedestrian and vehicle plying below. Guarding shall be of 3 wire system. 1 wire on lower side and two on the upper side of the angle as shown in BPC-DDCS-2015-62. Requirement of guarding shall be as follows:

- Guarding is to be used for road crossing of power line with bare conductor only.
- G.I. wire of 8 W.S.G is used for guarding.
- The first lacing should be at a distance of 750 mm from the pole. Other lacing is tied at a distance of 3 meter from each other.
- The vertical distance between conductor and guarding in mid span should be 1220 mm.
- The clearance between line and guarding cross arm for 11 kV and 33 kV line should be 650 mm and 840 mm respectively.

5.5 Pole Earthing

All 11 kV and 33 kV steel poles should be separately earthed. The earth pin is a 2.5 m galvanized steel rod, which must be driven into undisturbed ground clear of the pit excavation. It is not acceptable to insert the earth rod in the pit excavation as the backfill used often does not provide a good earth connection.

The earth pin is connected to the pole using galvanized iron flat of size 25x6mm. The flat is connected from the pole base to the spike rod using nuts and bolts. Details of spike earthing are shown in drawing no. BPC-DDCS-2015-48.

The earth resistance of the pole and earth pin connected together should be as low as possible and ideally should not exceed 10 ohms. Additional earth pins, spaced at least 1 metre apart, should be used in difficult locations, to reduce the resistance. Stake earthing is not required for LV poles since the lines are of covered conductor.

The earthing stake for pole earths is also used for earthing LV distribution pillars.

5.6 Final Completion and Commissioning of MV Lines

Before a line is energised for the first time pre-commissioning installation work must be completed on each pole. This comprises:

- The painting of non-galvanised poles with aluminium paint with the bottom two metres above the ground and below the ground to be painted black;

- The attachment of anti-climbing device at a height of 3.5m to 4m from ground level to medium voltage pole to avoid unauthorized pole climbing. Fixing of danger notices to single/ double pole structure where required by BPC. The danger notices should be fixed about 2 metre above ground level and, where appropriate, should face the road or any track or other pedestrian walkway.

- Before commissioning a line into service, the line shall be visually checked over its full length to ensure that all structures are correctly installed, all pole earths are installed and connected, all conductors are correctly bound and terminated on all structures and all tools and other equipment have been removed.

The line shall be energised with all distribution substations isolated and unloaded on the low voltage side. Where the line is directly connected to a zone substation supply bus, rather than to an upstream line, the protective relay settings should be reduced. Once the line has been successfully energised, the correct protection relay settings should be applied and the distribution substations connected to the load one at a time.

5.7 Installation of Distribution Transformer

As discussed in previous section, transformer capacity of 125 kVA and below shall be pole mounted.

5.7.1 Pole Mounted Transformers

For installing pole-mounted transformers, as far as possible, subsidiary poles and street lighting poles should not be used as transformer poles. Special care should be taken to maintain proper climbing space and to avoid crowding of wire and equipments. Transformers should be installed only on poles strong enough to carry their weight. Transformer poles should be straight and, where necessary, guyed to prevent learning or raking of the pole after the transformer is hung. Double cross-arms should be provided for each transformer installation. The climbing space (2400mm Pole Center-Center) should be carefully maintained so that it should not be necessary for a lineman to come close to the transformer tank in climbing up or down a pole. An anticlimbing device should be provided.

5.7.2 Site Selection for Pole mounted Transformers

The location of pole mounted distribution transformer substations should ideally be:

- As close as possible to the centre of the load, in order to reduce the voltage drop in the low voltage circuits;
- In a location that is clear of obstructions and is that provides satisfactory access for the incoming medium voltage overhead distribution line;
- Readily accessible for transport of the distribution transformer to site;
- Above a road rather than below it where this is practical; and
- In a location likely to provide a low resistance to earth.

5.7.3 Pad Mounted Distribution Transformers

Since the transformers operate without moving parts, generally a simple foundation is satisfactory; provided it is firm, horizontal and dry. The transformer should not rock or bed down unevenly so as to tilt, as this may strain the connections. The base should be horizontal to keep the oil level correct. For outdoor transformers where rollers are not fitted, leveled concrete plinth with bearing plates of sufficient size and strength can be adopted. The plinth shall be above the maximum flood level of the site and of the correct size to accommodate the transformer in such a way so that no person may step on the plinth. Where rollers are fitted, suitable rails or tracks should be provided and when the transformer is in the final position, the wheels should be locked by locks or other means to prevent accidental movement of the transformer.

The foundation should be constructed of Plain concrete cement or reinforced, air entrained concrete having enough strength to hold the individual transformer load. The dimension of the plinth shall be designed based on approved transformer drawing however the height of the plinth shall be 1000 mm above the ground level. The equipment installed shall be enclosed by a chain link fence. The size of chain link fence shall be 10 mx10 m as shown in drawing no. BPCDDCS-2015-63.

5.8 Substation Earthing

Particular care should be given to the construction of the earthing system as proper earthing of distribution transformer substations is necessary to ensure safe operation of the supply system. The earth pits should be located as shown in drawing no. BPC-DDCS-2015-64 and the earth connections to the substation structure are shown in drawing BPC-DDCS-2015-65.

BPC's standard earthing conductor for transformer substations is 25x6mm galvanised iron strap. Three electrodes are used forming an equilateral triangle with minimum distance of 6500 mm, so that adequate earth buffer is available. Each Electrode shall be a GI pipe of 4mm thick, 40mm outer dia and 2500mm long and buried vertically so as to leave about 4 inch pipe length above ground level to fix a 250x250mm G.I plate. The three earth electrodes should be connected together by an equipotential earthing ring embedded at least 100 mm below ground level. These are connected as follows:

- One earth electrode is connected to each lightning arrestor and the transformer tank. It is important that the earthing conductor is kept as short as possible.
- The second earth electrode is connected to the transformer LV neutral bushing, the transformer tank and the crossarms supporting the drop-out fuses.
- The third earth electrode is also connected to the transformer tank and LV neutral and also to the earth in the low voltage distribution cabinet.

There shall be minimum joints preferably no joints enroute to earth electrodes. Where Joints are unavoidable, they shall be brazed, riveted or welded and bolted (and painted with red lead and aluminum paints one after the other and finely coated with bitumen). The maximum permissible earth resistance as per the international standard is 5 ohms, however, due to difficulties to obtaining required value of 5 ohms, 25 ohms is allowable value in BPC. Modern earthing compounds are recommended instead of salt and charcoal to reduce the earth resistance of the substation in extreme situations.

5.9 Transportation and Handling of Transformers.

Distribution transformers should be stored in such a way that 'first in and first out' becomes a normal procedure. Care must be taken to place the transformers in store in such a fashion that no damage occurs to tank, bushings, etc. due to movement of personnel and materials.

Transformers should be loaded and unloaded with care. Prior to loading a transformer for dispatch to site, the transformer condition (bushings, fittings, tank, oil level, etc.) should be checked. If any damage is noticed, the in-charge should be notified immediately, and transformer should be loaded only after the written approval of the person in charge.

Every transformer dispatched to site should be entered individually in store register. This register should have the following:

(i) Sl. No.
(ii) Date of receipt
(iii) Transformer capacity (kVA)

(iv) Manufacturer's name
(v) Date of Despatch to site
(vi) Name of site

Transformers should be lifted using the lifting lugs provided on the transformer tank and the lifting arrangement should not cause unbalance of the transformer. Before lifting the complete transformer, it should be ensured that all cover bolts are tightened. The slings, lifting tackle, etc. to be used in hoisting of transformers should have adequate strength to handle the weight.

During transport of transformers, they should be rigidly secured to the transport vehicle and packing material put on either side of the base of the transformer to prevent skidding. A responsible official shall supervise the loading. Rollers, if provided, should be removed.

Care should be taken in transporting transformers to site to prevent the transformers moving when going up and down hills and around corners.

The transformer should be brought just adjacent to the double pole structure for hoisting it on the transformer platform. Lifting tackle should be used for hoisting transformer on the structure.

In case, it is not possible to bring the vehicle carrying transformer near the double pole structure, it should be unloaded at a nearest safe place and carried to the double pole structure manually with great care and under proper supervision or shifted on platforms fitted with rollers.

While hoisting transformers on the transformer platform, safety precautions by way of fixing additional clamps and bolts should be taken. Readymade slings to suit the capacity of transformer should be available.

5.10 Protection of Distribution Transformers

The pole mounted distribution substation arrangement has been standardized to the extent possible with the structure and the high voltage connections being identical for all transformer sizes. Dropout fuses are provided on H.V side of the transformer for isolating and protection. The size of fuse link used in these drop out fuses will vary with transformer rating. Acceptable fuse link sizes for BPC's existing transformer capacities are given in table 99 below: For transformers located at the remote end of rural feeders, where the short circuit levels are potentially low, fuse links at the lower end of the allowable range should be used.

Table 99: Acceptable Transformer Medium Voltage Fuse Link Ratings

MV Rating (kV)	Phases	Capacity (kVA)	Rated Current (A)	Fuse Link (A)
33	3	63	1.1	2 to 4
33	3	125	2.2	4 to 7
33	3	250	4.4	9 to 16
33	3	500	8.7	16 to 32
33	1	10	0.3	1 to 2
33	1	16	0.5	1 to 2
33	1	25	0.8	2 to 3

MV Rating (kV)	Phases	Capacity (kVA)	Rated Current (A)	Fuse Link (A)
11	3	16	0.8	2 to 3
11	3	24	1.3	2 to 4
11	3	63	3.3	7 to 9
11	3	125	6.6	16 to 25
11	3	250	13.1	32 to 40
11	3	500	26.2	50 to 100
11	3	1250	65.6	150 to 300
11	1	10	0.9	2 to 3
11	1	16	1.5	3 to 7

On the low voltage side of the transformer the supply cable is run into a 4-way feeder cubicle mounted on the transformer structure. The cubicle's incoming cable is terminated into a circuit breaker which can be used to offload the transformer. Three pole moulded case circuit breakers (MCCBs) shall be used for transformer sizes up to and including 315 kVA. Air circuit breakers may be used for larger transformers.

Circuit breakers shall comply with the requirements of IEC 60947-2 and shall be of the air break, quick make, quick break, trip free type, and fitted with electronic overcurrent, earth fault and short circuit protection. This protection shall not require an external power supply. The elements shall be adjustable so that adjustments are made simultaneously on all poles from a common adjustment control. The minimum interrupting current shall be 10 kA for transformers rated up to 250 kVA and 25 kA for larger transformers. When commissioning the transformer the MCCB overload shall be adjusted to be consistent with the full load transformer current as shown in table 99.

The size of the LV cable between the transformer and the feeder cubicle will depend on the size of the transformer, and is given in the following table 100. For non-standard intermediate size transformers the cable rating for the next size should be used. The table assumes that all cables up to 400 mm2 are PVC insulated. The 630 mm2 cable used on the 1,250 kVA transformer must be XLPE insulated in order to have the required rating.

Table 100: Low voltage cable ratings used between transformer and DP

Phases	Transformer Rating (kVA)	Maximum LV Current (A)	LV Cable Size (mm2)
3	10	14	35
3	16	22	35
3	25	35	35
3	63	88	70
3	125	174	150
3	250	348	300
3	500	696	2x300
3	1250	1740	2x630[1]
1	10	42	35
1	16	67	35
1	25	104	35

Note 1 Must be single core XLPE insulated cable.

MCCBs may be used to protect outgoing distribution circuits in urban areas. As for incoming circuit breakers, the minimum interrupting current shall be 10 kA for transformers rated up to 250 kVA and 25 kA for larger transformers. Whereas the incoming MCCB is set in accordance with the transformer size, the setting of the outgoing MCCBs should be determined by the size of the cable being protected. The maximum MCCB setting if used for outgoing circuits is given in table 101. In order to obtain protection discrimination, outgoing MCCB current settings should be lower than the incomer, even if this is less than the rating of the outgoing cable.

Table 101: Max. MCCB Ratings for Three Phase Low Voltage Aluminium Cable Circuits

Cable Size (mm2)	Maximum MCCB current setting[1]
35	100
70	135
150	210
300	305
400	335

Note 1: This is the same as the cable rating given in table 100.

For low rating distribution substations the outgoing low voltage circuits will be ABC. These circuits shall be protected by fuses rather than MCCBs. Fuses shall be high rupturing capacity fuses with cartridge type links manufactured in accordance with IEC 60269-1. The fuse link rating shall be in accordance with table 102 below.

Table 102: Maximum Fuse Link Sizes for ABC Cable

Cable Size (mm2)	Maximum Fuse Link Size (A)
50mm2 ABC	160
95 mm2 ABC	250

5.11 General Requirement of Distribution Boards

Distribution boards are used to connect customer service cables to distribution cables in underground or overhead systems. The pillar shall be sheet steel, robust, dust, weather and vermin proof, providing a degree of protection of IP 52 for indoor use and IP 54 for outdoor use. Sheet steel used shall be cold rolled, of minimum thickness 2.5 mm, smooth finished and appropriately stiffened to provide adequate strength. There shall be a removable gland plate of minimum 3 mm thickness. The distribution board shall have hinged doors with pad locking facility. Doors and other covers shall be fitted with neoprene gaskets, to satisfy the IP 52 and IP 54 requirements, to prevent ingress of dust, moisture and vermin.

All live parts shall have a minimum phase to phase and phase to earth clearance in air of 25 mm and 20 mm respectively. The removable cable gland plate of 2.5 mm cold rolled sheet steel is included. The interior cabling space is to be as per drawings. Requirements include an external earthing terminal suitable for 19 mm x 6 mm aluminium alloy earthing strip. Provide one number of HRC fuse puller for every distribution board.

The distribution board shall be provided with individual labels with designation or rating. The danger plate, as shown in the drawing, shall be fixed to every pillar door. All labels and plates shall be of corrosion resistant material. Distribution board can be categorized into three types as given in section 4.16.

Pole mounted transformers rated 125 kVA and below shall have the distribution board fixed on the pole or mounting platform. The board shall be supplied complete with a hot dipped galvanised steel fixing assembly, to allow the board to be mounted on one transformer station steel pole, at a height approximately 1200 mm above ground level. Fixing assembly is to fix to poles of diameters ranging from 120 to 300mm. large size distribution boards shall be plinth mounted near the substation. The components of transformer distribution boards are:

- **MCCBs and HRC Fuse**
  MCCBs shall be heavy duty type, mounted on bases, having a rupturing capacity of 10kA for transformers rated at 250kVA and 25kA for larger transformers. Outgoing feeders shall be protected by HRC Cartridge Fuse of appropriate capacity of the distribution pillar. The minimum rated breaking capacity of outgoing HRC fuse shall not be below 50kA.

- **Main Busbars**

  Main busbars shall be of aluminium of appropriate size. Busbars shall be horizontal, but with gradual gradient from front to rear as indicated in the drawing for the different phases. All busbars shall be solid, without joints and shall be rated for continuous maximum current. The maximum temperature of the busbars, under operating conditions when carrying rated normal current, shall not exceed 85°C. Busbars shall be adequately supported on insulators to withstand dynamic stresses due to short circuit current. Busbar support insulators shall conform to the relevant applicable Standard. Busbars shall not be painted and all performance characteristics specified shall be obtained with unpainted. The main busbar terminating to MCCB shall be with copper of appropriate current rating. Aluminium is not acceptable due to present construction issues where the size of aluminium bar has been reduced at MCCB terminal point to fit in MCCB slot, which gets burnt out over the time due to its reduced bar size.

- **Interior Lighting and Wiring**

  Large transformer distribution board shall be provided with two 230V, 50 Hz, 40W, incandescent lamp fixtures, placed diagonally opposite each other, internally at the top of the pillar, for interior illumination and controlled by limit door switch and 2A fuse link. Whereas for small size pillars, one lamp fixtures controlled by limit door switch is sufficient.

Table 103: Distribution Board Rating for Pole Mounted Transformer

Phase	Transformer Rating (kVA)	LV Current (A)	DB Specification
3	10	13.91	TPN DB with 100 amps Bus bar, incomer through 63 amps TP MCCB, 2ways/4ways outgoing with 63amps HRC fuse (6HRC fuses/12HRC fuses)

3	16	22.26	TPN DB with 100 amps Bus bar, incomer through 63 amps TP MCCB, 2ways/4ways outgoing with 63amps HRC fuse (6HRC fuses/12HRC fuses)
3	25	34.78	TPN DB with 100 amps Bus bar, incomer through 63 amps TP MCCB, 2ways/4ways outgoing with 63amps HRC fuse (6HRC fuses/12HRC fuses)
3	63	87.65	TPN DB with 200 amps Bus bar, incomer through 100 amps TP MCCB, 4ways outgoing with 100amps HRC fuse (12HRC fuse)
3	125	173.91	TPN DB with 300 amps Bus bar, incomer through 250 amps TP MCCB, 4ways outgoing with 200 amps HRC fuse (12HRC fuse)
1	10	41.67	SPN with 100 amps Bus bar, incomer through 63 amps SP MCCB, 2ways/3ways outgoing with 63 amps HRC fuse (2HRC fuses/3HRC fuses)
1	16	66.67	SPN with 100 amps Bus bar, incomer through 100 amps SP MCCB, 2ways/3ways outgoing with 100amps HRC fuse (2HRC fuses/3HRC fuses)
1	25	104.7	SPN with 200 amps Bus bar, incomer through 160 amps SP MCCB, 3ways outgoing with 100amps HRC fuse (3HRC fuses)

 # Transformer Distribution boards for rural network will require 2 spare fuse for connection to new upcoming households.

Table 104: LV Distribution Board Specification for Pad Mounted Transformer

Phase	Transformer Rating (kVA)	LV Current (A)	DB Specification
3	250	347.80	TPN DP with 400 amps Bus bar, 4ways outgoing with 400 amps HRC fuse (12HRC fuse)
3	315	438.23	TPN DP with 600 amps Bus bar, 6ways outgoing with 500 amps HRC fuse (18HRC fuse)
3	500	695.60	TPN DP with 800 amps Bus bar, 6ways outgoing with 800 amps HRC fuse (18HRC fuse)

Mini Feeder Pillars are used for feeding consumers from Ring /Loop networks. Therefore a mini feeder pillar doesn't have incoming MCCB and outgoing HRC fuse protection. Mini feeder pillar comes with aluminum bus bars with nuts and bolts to connect cable lugs of different sizes. Mini feeder pillar shall also have interior lighting facilities similar to transformer distribution pillar. They shall have a degree of protection of IP 55 or better with bottom cable entry to avoid water ingress. The minimum panel thickness shall be 2.5 mm, and there shall be a removable gland plate of minimum 3 mm thickness. There shall be a lockable hinged door with a minimum thickness of 2 mm. Separate aluminium phase and neutral busbars shall be provided.

5.12 Connection of supply to consumer's premises

Supply to consumer premises through a 2 or 4 core overhead cable in situations where consumers are fed from the overhead system and a 2 or 4 core underground cable when fed from an urban underground system.

Drawing DDCS-BPC-2014-66 shows the connection arrangement for a three phase and single phase consumers. All components except the energy meter shall be provided by the consumer. The energy meter will be provided by BPC.

A new connection should not be livened unless:

- The consumer has installed an MCB as a point of isolation;
- The consumer has installed a stake earth, which is connected to a main earth terminal on the consumer's distribution board;
- There is a link between the earth terminal and the incoming neutral. As shown in the drawing, the configuration of this connection will depend on connection of an ELCB/RCCB.

5.12.1 Consumer Metering

The choice of meter to install in a consumer installation will depend on the expected load. Three types of meter are available:

- Direct connected, where the meter is directly connected to the incoming low voltage supply;
- CT metering, where the meter is indirectly connected to the low voltage supply through a current transformer; and
- High voltage metering, where the consumer is supplied at high voltage and the meter is indirectly connected to the high voltage supply through a high voltage metering unit.

5.12.2 Direct Connected Metering

Direct connected metering should be used when the consumer load is does not 60 A. Standard direct connected meters used by BPC are given in Table.

Table 105: BPC Standard Direct Connected Meters

Phase	Meter Type	Capacity (A)	Class
1	Static	10-60Amps	2
3	Static	5-30Amps	2
	Static	10-80Amps	2

The class of meter indicates its accuracy and the meter capacity indicate the current range over which the accuracy can be assured. Hence a class 2 10/60 A meter can be expected to have a metering accuracy of 2% over a current range of between 10 and 60 amps.

5.12.3 CT Metering

Where the consumer is supplied at low voltage and the expected maximum three phase load is greater than 60 A, current transformer (CT) metering should be used. All current transformers have a 5 A output and feed into a standard 5 A, class 1 static meter. The load shown on the meter needs to be multiplied by the CT ratio to give the actual consumption.

CTs currently used by BPC have a ratio of 100/5, 200/5, 300/5, 400/5, and 500/5 and have an accuracy of class 1 and a burden of 15 VA.

Care must be taken to ensure the correct multiplier is used when measuring consumption using CT metering.

Table 106: BPC Standard CT Connected Meters

CT class	Meter Type	Capacity (A)	Class
X/5	Static	100/5Amps	1
	Static	200/5Amps	1
	Static	300/5Amps	1
	Static	400/5Amps	1

5.12.4 High Voltage Metering

Consumers supplied at high voltage must provide a high voltage metering unit acceptable to BPC. The high voltage metering unit shall incorporate both potential and current transformers. The current transformer shall be class 0.5, have a maximum burden of 15 VA and have either a 1 A or 5 A output. The voltage transformer shall be class 0.5, have a maximum burden of 15 VA and have a 110 V output.

BPC will connect its own class 0.5 trivector electronic meter meeting the requirements of IEC 60687 to the consumer's high voltage metering unit. The meter shall incorporates a data logging facility and be capable of recording a range of different power system parameters at the point of connection.

5.13 Underground Cable Installation

5.13.1 General

- These notes in general cover cables upto and including 33 kV rating.
- Electrical installation work shall comply with all currently applicable statutes, regulations and safety codes in the locality/country where the installation is to be carried out.
- Installation of cables shall be carried out generally as per IS 1255 or relevant applicable IEC standards and enclosed typical drawings.

- Installation of cables shall include unloading, storing, laying, fixing, jointing, termination and all other work necessary for completing the job. Supply of glands and lugs whenever specified, together with necessary materials for jointing and termination shall also be included in Contractor's scope.

- Construction of cable trenches, provision of embedments and similar work involving civil items will be carried out as per the instructions/notes on the respective project drawings and installation specification.

- Cables will be installed in trenches, trays, racks, tunnels, conduits, duct banks or directly buried. The actual cable layouts will be shown on the relevant drawings. Any changes, if necessary, after obtaining prior approval of the Engineer shall be carried out at site by the Contractor and shall be clearly marked by him on drawings.

- Cables to each circuit shall be laid in one continuous length.

- Where cables are to be installed at temperatures below 3 º C, they shall be heated to about 10 º C for not less than 24 hours (in a heated building or in a tent with hot air heater) to facilitate laying (otherwise the bending would damage the insulation and protective coverings of cables). The cable laying must be carried out swiftly so as not to allow the cable to cool down too much.

- Instead of cast iron cable route marker, plastic marking tape may be used for UG which shall run along the length of the cable and shall have cable marking at every 1.5meter length.

5.13.2 Outdoor Cable Installation

- Directly buried cables shall be laid as per the drawings and cable route markers shall be provided.MS cable marker to be replaced by plastic marker buried cables in trefoil formation shall be bound by plastic tapes or 3mm dia. nylon core every 750 mm.

- Joints in directly buried cables shall be identified by joint markers at each joint location.

- In each outdoor cable run greater than 50 metre, some extra cable length shall be kept at a suitable point to enable a straight through joint to be made should the cable develop fault at a later date.

- Where cables cross roads, water or sewage pipes, the cable shall be laid in hume or steel pipes. For road crossings the pipe for the cable shall be buried at not less than 600 mm unless otherwise noted in the drawings. Hume pipes shall be preferred to steel pipes from the point of view of corrosion.

- Control cables and small power cables in trenches and tunnels shall be run in ladder type cable trays (maximum tray width 600 mm) supported on trench/tunnel carrier arms. The cables shall be laid to tray rungs by means of 3mm dia. nylon cord at an interval of 5000 mm and also at bends.

- For good sealing arrangement at entry points, suitable pipe sleeves, adequate in number and of adequate sizes shall be provided in building walls/slabs for passage of cables into a building from cable trays/racks/cable trenches located outside the buildings.

5.13.3 Bending Radii for Cables

The bending radii for various types of cables shall not be less than those specified below, unless specifically approved by the Engineer.

Description	Single Core	Multicored Armoured	Multicored Unarmoured
PVC insulated cable upto 11 kV	20 D	12 D	15 D

Where D = Overall diameter of cable.
(For XLPE insulated cables, recommendations of manufacturers to be followed).

The above values may be reduced to 70% when making only one bend such as in case of installing an end termination

5.13.4 Terminations Clamping & Miscellaneous Details

- Cable entry to motors, push button stations and other electrical devices shall be from the bottom as far as possible or from the sides. Top entry shall be avoided particularly for outdoor equipment.

- Identification tags made from aluminium sheet shall be attached to each end of each cable by means of GI binding wire as shown in drawing. Tags shall be additionally put at an interval of 30 meters on long runs of cables and in pull boxes.

- All cable terminations shall be solderless crimping type. Whenever lugs are required to be supplied, adequate size crimping lugs of approved make shall be used by the Contractor. The crimping tools shall be adequate for the lug sizes.

- Wooden cleats when required for vertically supporting on or more single core cables per phase, such as on vertical framework near transformer cable boxes, shall be made out of well seasoned wood given two coats of fire retarding paint of approved quality.

5.13.5 Earthing of Cables

- Metallic sheaths, screens and armour of all multi-core cables shall be earthed at both equipment and switchgear end.
- Sheath and armour of single core power cables shall be earthed at switchgear end only. If specifically indicated in drawings, for long lengths of cables multiple earthing may have to be adopted to safeguard against the presence of standing voltage under normal as well as fault conditions.
- Earthing of CT and PT neutral lead shall be at one end only.

LIST OF DRAWINGS

Sl. No.	Drawing no:	Description
1	BPC-DDCS-2015-52	General Arrangement of 4 ways Unitized Substation
2	BPC-DDCS-2015-53/1	Single Phase Transformer LT Panel, Incomer MCCB upto 125Amps, HRC Fuse upto 125Amps (Internal View)
3	BPC-DDCS-2015-53/2	Single Phase Transformer LT Panel, Incomer MCCB upto 125Amps, HRC Fuse upto 125Amps (External View)
4	BPC-DDCS-2015-54/1	Three Phase Transformer LT Panel , Incomer MCCB upto 200Amps, HRC Fuse upto 63Amps (Internal View)
5	BPC-DDCS-2015-54/2	Three Phase Transformer LT Panel , Incomer MCCB upto 200Amps, HRC Fuse upto 63Amps (External View)
6	BPC-DDCS-2015-55	Mini Feeder Pillar 76 BPC-DDCS-2015-56/1 4 Ways Transformer Distribution Pillar (Front Elevation)
7	BPC-DDCS-2015-56/1	4 Ways Transformer Distribution Pillar (Front Elevation)
8	BPC-DDCS-2015-56/2	4 Ways Transformer Distribution Pillar (Side Elevation)
9	BPC-DDCS-2015-56/3	4 Ways Transformer Distribution Pillar (Front Elevation without Door)
10	BPC-DDCS-2015-56/4	4 Ways Transformer Distribution Pillar (Gland Plate Details)
11	BPC-DDCS-2015-56/5	4 Ways Transformer Distribution Pillar (Foundation Details and Lighting Circuit)
12	BPC-DDCS-2015-57/1	6 Ways Transformer Distribution Pillar (Front Elevation)
13	BPC-DDCS-2015-57/2	6 Ways Transformer Distribution Pillar (Side Elevation)
14	BPC-DDCS-2015-57/3	6 Ways Transformer Distribution Pillar (Front Elevation without Door)
15	BPC-DDCS-2015-57/4	6 Ways Transformer Distribution Pillar (Gland Plate Details)
16	BPC-DDCS-2015-57/5	6 Ways Transformer Distribution Pillar (Foundation Details and Lighting Circuit)
17	BPC-DDCS-2015-64	33kV or 11kV/0.415V Distribution Substation Pipe Earthing
18	BPC-DDCS-2020-1A	Directly Buried Cables without Conduit
19	BPC-DDCS-2020-1B & C	Internal BPC & Multi - Utility
20	BPC-DDCS-2020-1B & C	Details of slabs, Lifting Hooks & Edge
21	BPC-DDCS-2020-1C	Internal BPC & Multi - Utility
22	BPC-DDCS-2020-1D	Directly Buried Cables with Conduit
23	BPC-DDCS-2020-37A	Unitized Substation Foundation-11kV (7 Ton)
24	BPC-DDCS-2020-37B	Unitized Substation Foundation-33kV (9 Ton)
25	BPC-DDCS-2020-37C	Unitized Substation Foundation-33kV (8 Ton)
26	DRG. No 1	Feeder Pillar Foundation (Plan)
27	DRG. No 2	Feeder Pillar Foundation (Section)
28	BPC-DDCS-2014-51B	Indicative Arrangement of GEE Slab Earthing – Distribution Substation

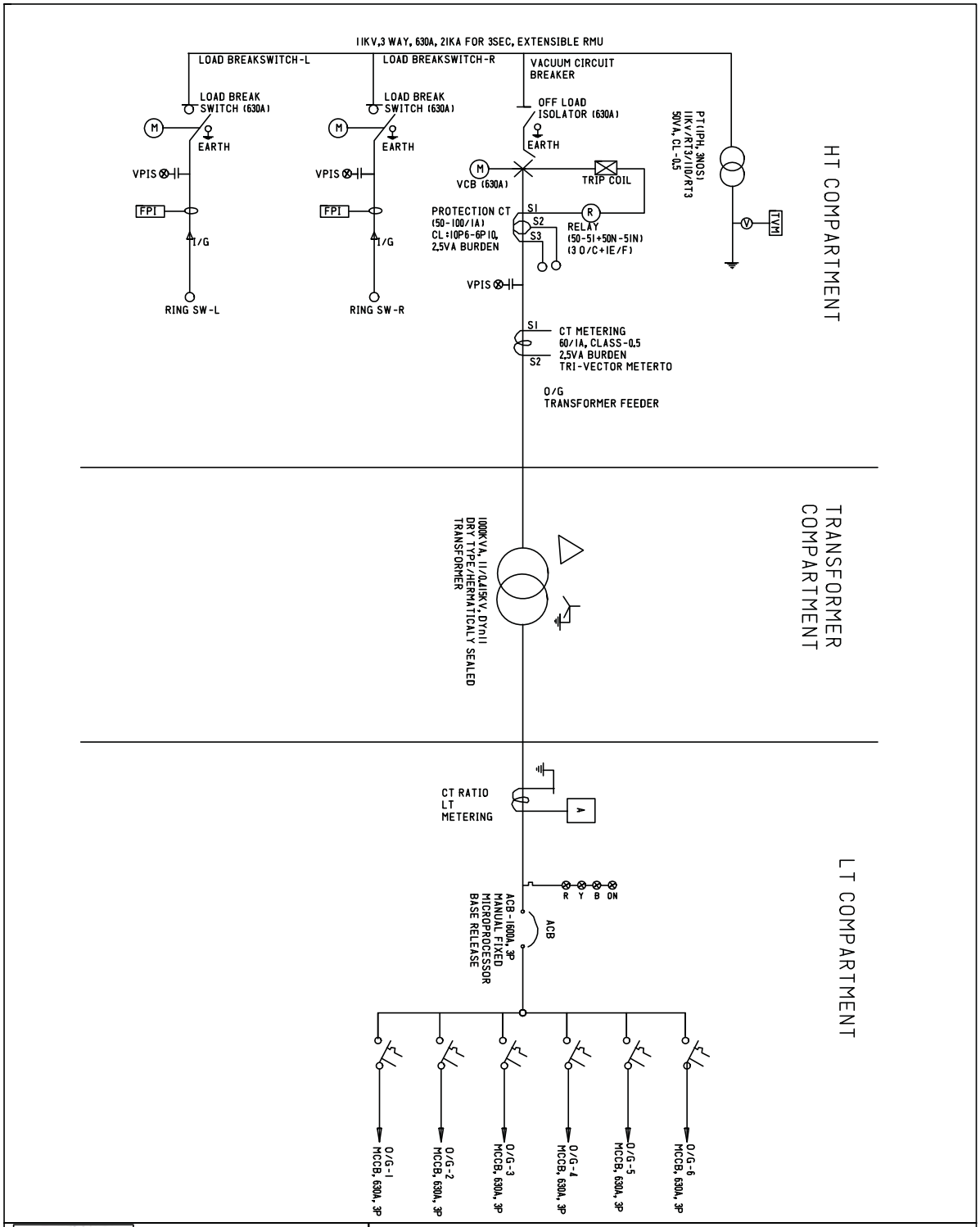

BHUTAN POWER CORPORATION LIMITED

ENGINEERING DESIGN & CONTRACTS DEPARTMENT

TITLE : DISTRIBUTION DESIGN & CONSTRUCTION STANDARD

GENERAL ARRANGEMENT OF 4WAYS UNITIZED SUBSTATION

DESIGNATION	NAME	DATE
DRAFTSMAN		
DESIGNER		
DESIGN CHECK		
PROJECT MANAGER		
PROJECT DIRECTOR		

DRAWING NO. BPC-DDCS-2015-52

REVISION 2015

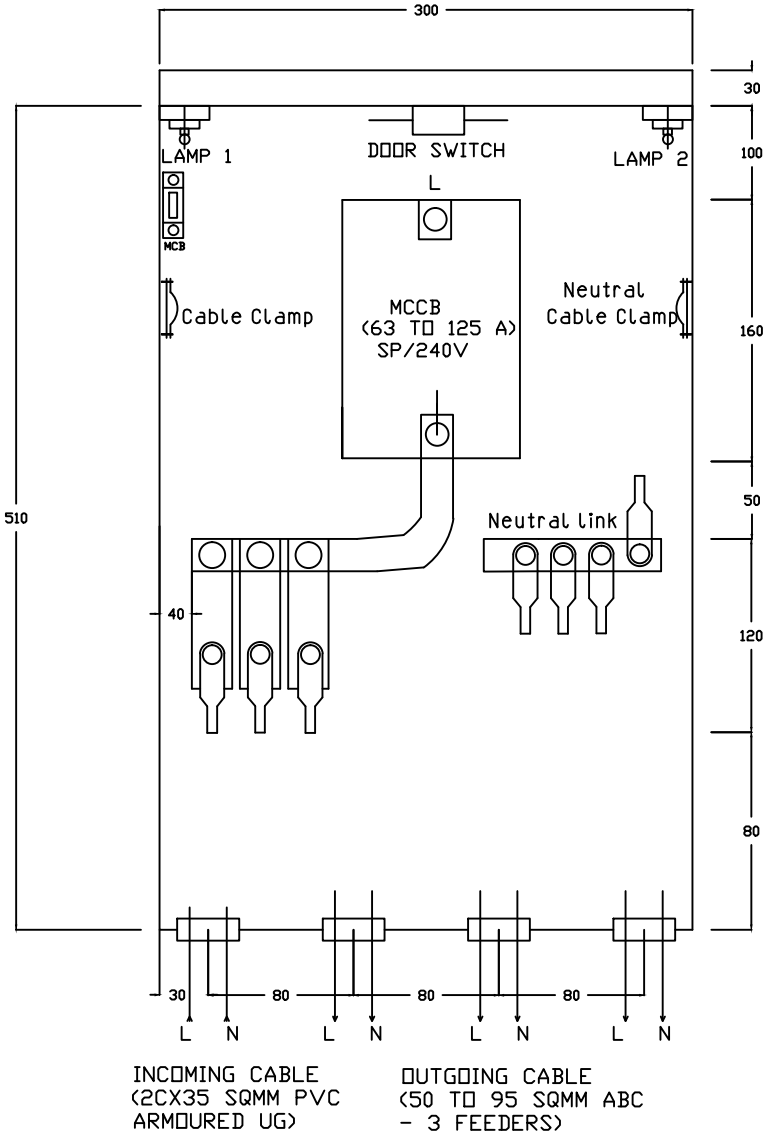

INTERNAL WIRING DIAGRAM OF DISTRIBUTION PILLAR

NOTES

INNER DEVICE:
MCCB: RATING UPTO 160 A, SPN,1 NO.
HRC FUSES: RATING UPTO 100 A-3 NOS/2NOS DEPENDING ON NUMBER OF WAYS.

DIMENSIONS AS SHOWN ARE IN MM.

TO BE USED WITH 10 kVA, 16KVA AND 25KVA SINGLE PHASE TRANSFORMER RATINGS

CABLE LUG TO BE SUPPLIED FIXED WITH THE BOARD FOR APPROPRIATE CABLE SIZES.

BHUTAN POWER CORPORATION LIMITED

ENGINEERING DESIGN & CONTRACTS DEPARTMENT

TITLE : DISTRIBUTION DESIGN & CONSTRUCTION STANDARD

SINGLE PHASE TRANSFORMER LT PANEL, 3 WAYS, INCOMER MCCB-UPTO 160 A, OUTGOING HRC FUSE UPTO 100 A (INTERNAL VIEW)

DESIGNATION	NAME	DATE
DRAFTSMAN		
DESIGNER		
DESIGN CHECK		
PROJECT MANAGER		
PROJECT DIRECTOR		

DRAWING NO. BPC-DDCS-2015-53/1

REVISION 2015

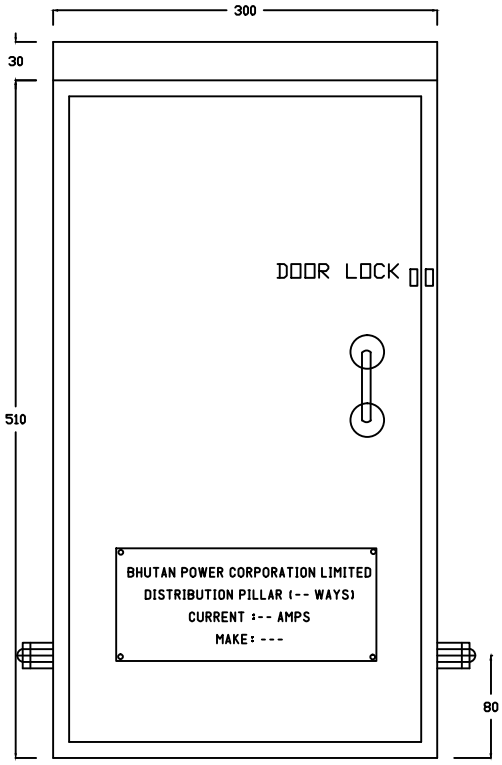

FRONT VIEW

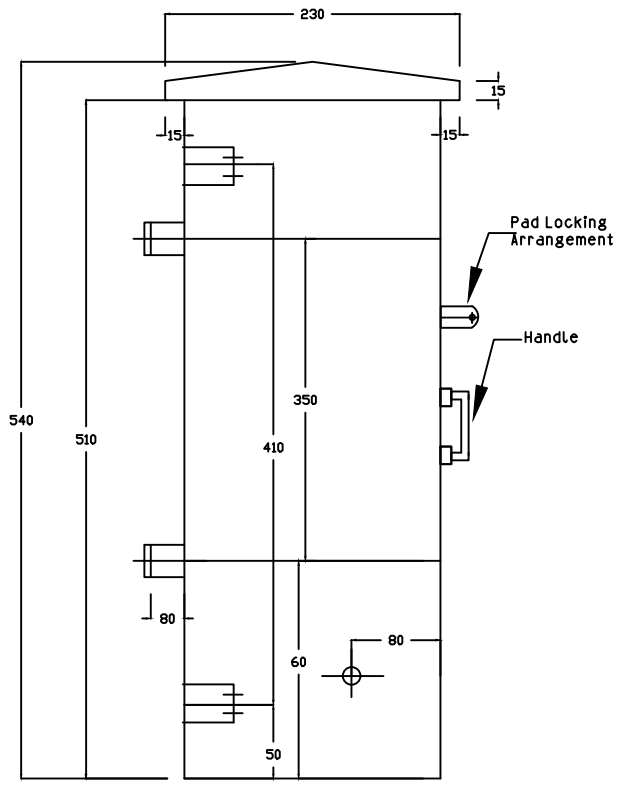

SIDE VIEW

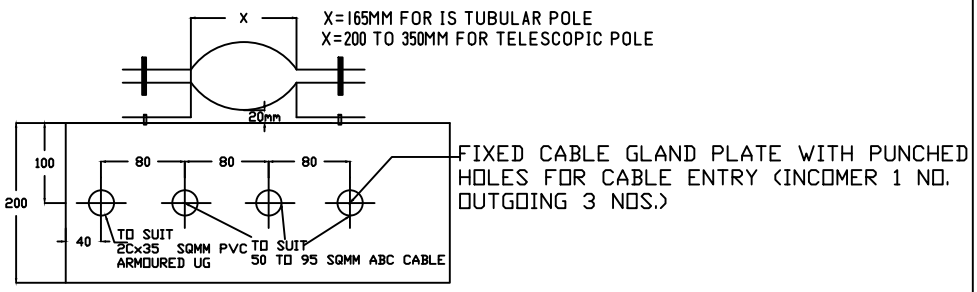

BOTTOM VIEW

NOTE:

MCCB RATING	PHASE BUSBAR SIZE	NEUTRAL BUSBAR SIZE
63A	12X6MM AL.ALLOY, GR-E91E	12X3MM AL.ALLOY, GR-E91E
100A	12X8MM AL.ALLOY, GR-E91E	12X4MM AL.ALLOY, GR-E91E
125A	19x6MM AL.ALLOY, GR-E91E	19X3MM AL.ALLOY, GR-E91E
160A	19x8MM AL.ALLOY, GR-E91E	19X4MM AL.ALLOY, GR-E91E

BAYONET LAMP (1 NO.) TO BE PROVIDED

BHUTAN POWER CORPORATION LIMITED

ENGINEERING DESIGN & CONTRACTS DEPARTMENT

TITLE : DISTRIBUTION DESIGN & CONSTRUCTION STANDARD

SINGLE PHASE TRANSFORMER LT PANEL, 3 WAYS, INCOMER MCCB-UPTO 160 A, OUTGOING HRC FUSE UPTO100 A(EXTERNAL VIEW)

DESIGNATION	NAME	DATE
DRAFTSMAN		
DESIGNER		
DESIGN CHECK		
PROJECT MANAGER		
PROJECT DIRECTOR		

DRAWING NO. BPC-DDCS-2015-53/2

REVISION 2015

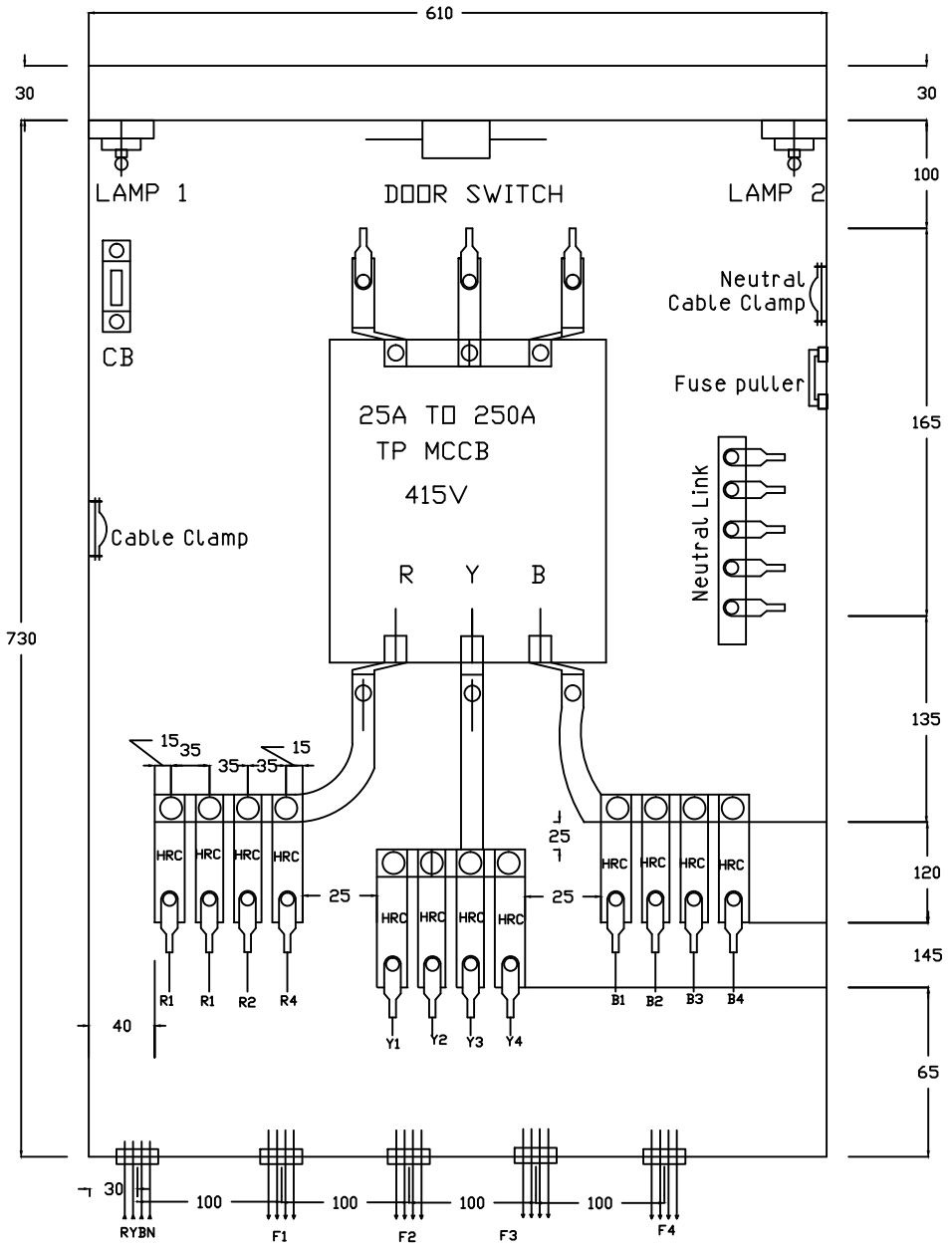

INCOMING CABLE (150 SQMM PVC ARMOURED UG)

OUTGOING CABLE (50 TO 120SQMM ABC - 4 FEEDERS)

NOTES

INTERNAL WIRING DIAGRAM OF DISTRIBUTION PILLAR

INNER DEVICE:
MCCB UPTO 250A, 1NO. TPN-415V
HRC FUSES: UPTO 125A, 6 NOS/12NOS DEPENDING ON NUMBER OF WAYS

Provide one number of HRC fuse puller for every board.

TO BE USED WITH 16KVA, 25KVA, 63 kVA and 125 kVA 3PHASE TRANSFORMER RATINGS

CABLE LUG TO BE SUPPLIED FIXED WITH THE BOARD FOR APPROPRIATE CABLE SIZES.

BHUTAN POWER CORPORATION LIMITED			ENGINEERING DESIGN & CONTRACTS DEPARTMENT
			TITLE : DISTRIBUTION DESIGN & CONSTRUCTION STANDARD THREE PHASE TRANSFORMER LT PANEL, 4 WAYS, INCOMER MCCB-UPTO 250A, OUTGOING HRC FUSE UPTO 125A(INTERNAL VIEW)
DESIGNATION	NAME	DATE	
DRAFTSMAN			
DESIGNER			
DESIGN CHECK			DRAWING NO. BPC-DDCS-2015-54/1
PROJECT MANAGER			REVISION 2015
PROJECT DIRECTOR			

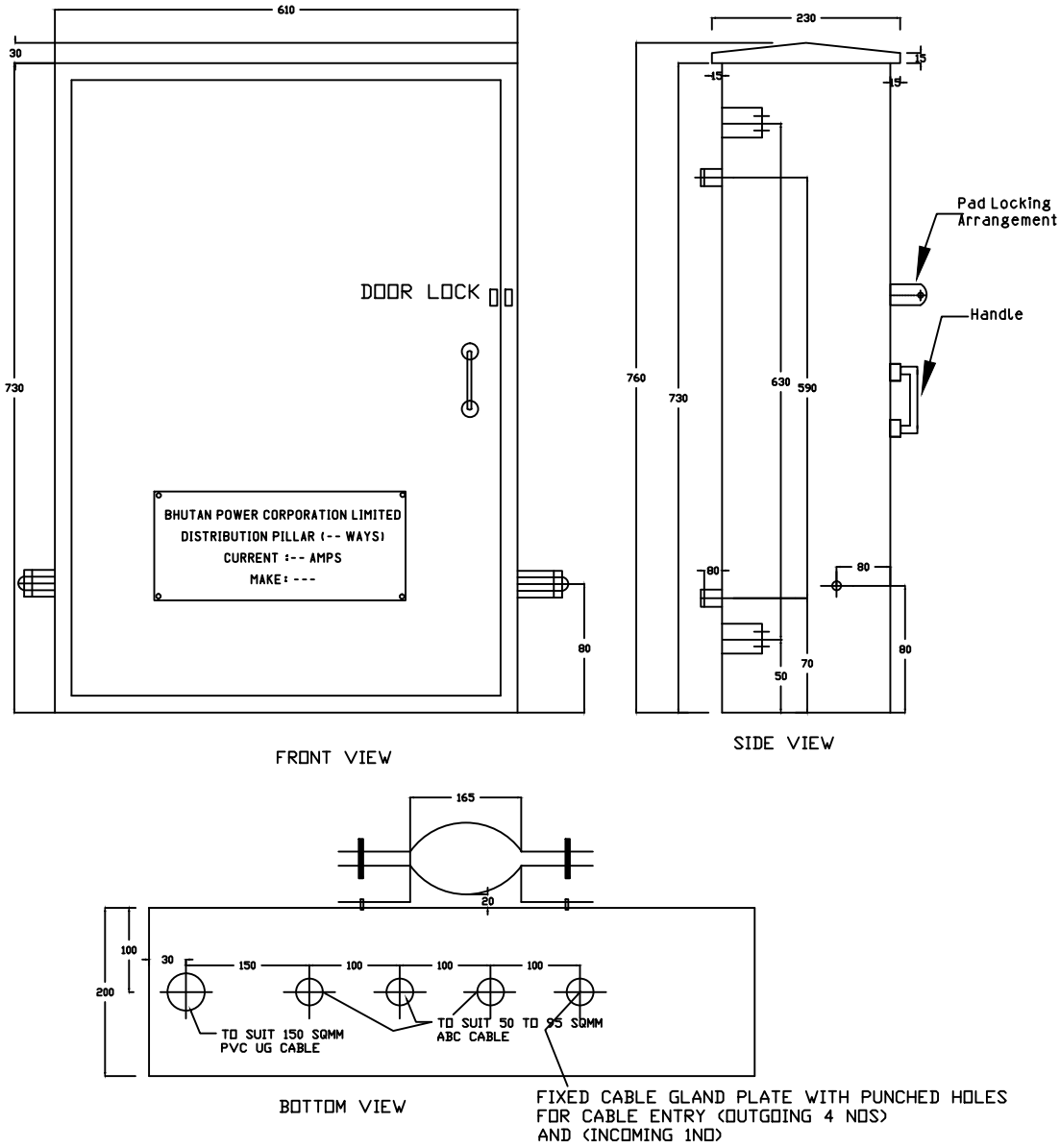

NOTE:

BUSBAR SIZE 25x10MM AL/ 20x3MM CU
NEUTRAL BUSBAR 25x5MM AL / 20x3MM CU
BAYONET LAMP (IND) TO BE PROVIDED

BHUTAN POWER CORPORATION LIMITED			ENGINEERING DESIGN & CONTRACTS DEPARTMENT
			TITLE : DISTRIBUTION DESIGN & CONSTRUCTION STANDARD THREE PHASE TRANSFORMER LT PANEL, 4 WAYS, INCOMER MCCB-UPTO 250A, OUTGOING HRC FUSE UPTO 125A (EXTERNAL VIEW)
DESIGNATION	NAME	DATE	
DRAFTSMAN			
DESIGNER			
DESIGN CHECK			DRAWING NO. BPC-DDCS-2015-54/2 — REVISION 2015
PROJECT MANAGER			
PROJECT DIRECTOR			

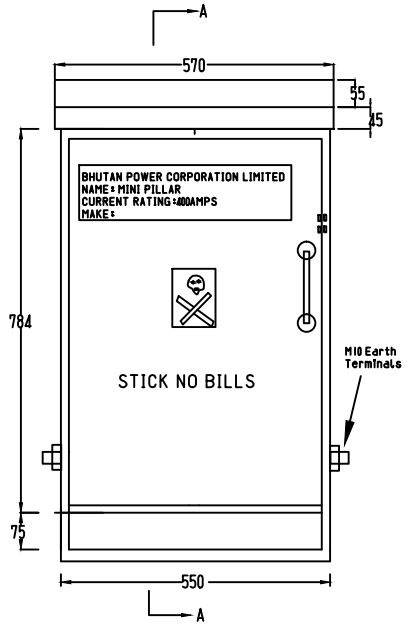

FRONT ELEVATION

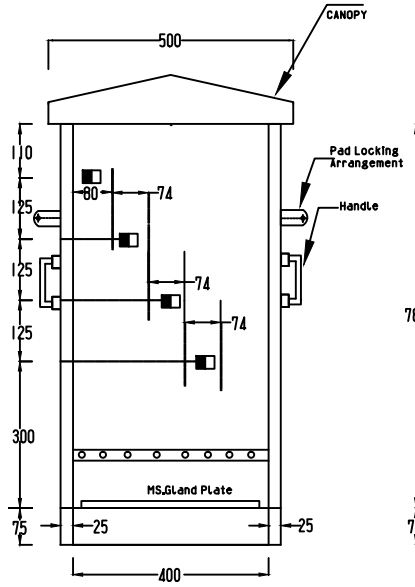

SIDE ELEVATION: (A:A)

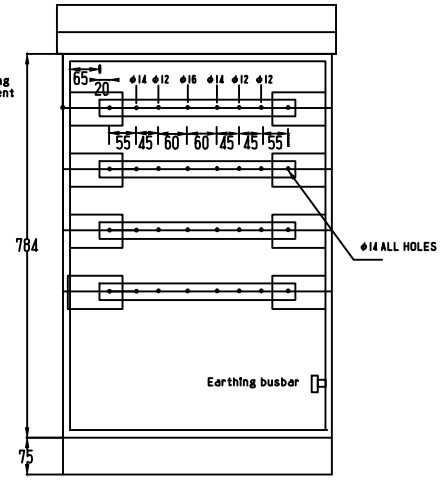

FRONT ELEVATION
WITHOUT DOOR

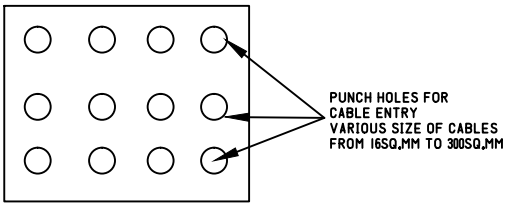

GLAND PLATE DETAILS

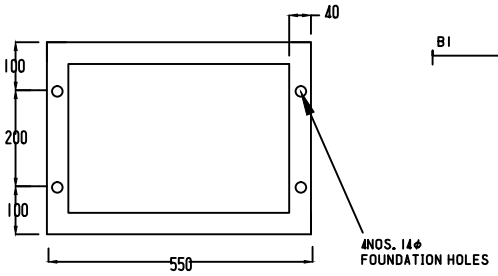

FOUNDATION PLAN

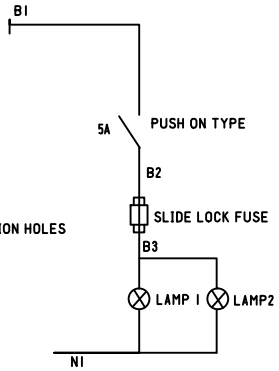

PHASE BUSBAR - 1X6X50MM AL. ALLOY
NEUTRAL - 1X6X50MM ALALLOY.
MATERIAL - THE FEEDER PILLAR (INCLUDING BASE CHANNEL SHALL BE FABRICATED OUT OF 2.5MM MS SHEET
PAINT - SIEMENS GREY (OUTSIDE) & WHITE (INSIDE)
EARTH BUSBAR - 1X6X19MM AL. ALLOY.

NOTES
1. DIMENSIONS AS SHOWN ARE IN MM.
2. DRAWING NOT TO SCALE.

BHUTAN POWER CORPORATION LIMITED

ENGINEERING DESIGN & CONTRACTS DEPARTMENT

TITLE : DISTRIBUTION DESIGN & CONSTRUCTION STANDARD

MINI FEEDER PILLAR 400AMPS

DESIGNATION	NAME	DATE
DRAFTSMAN		
DESIGNER		
DESIGN CHECK		
PROJECT MANAGER		
PROJECT DIRECTOR		

DRAWING NO. BPC-DDCS-2015-55

REVISION
2015

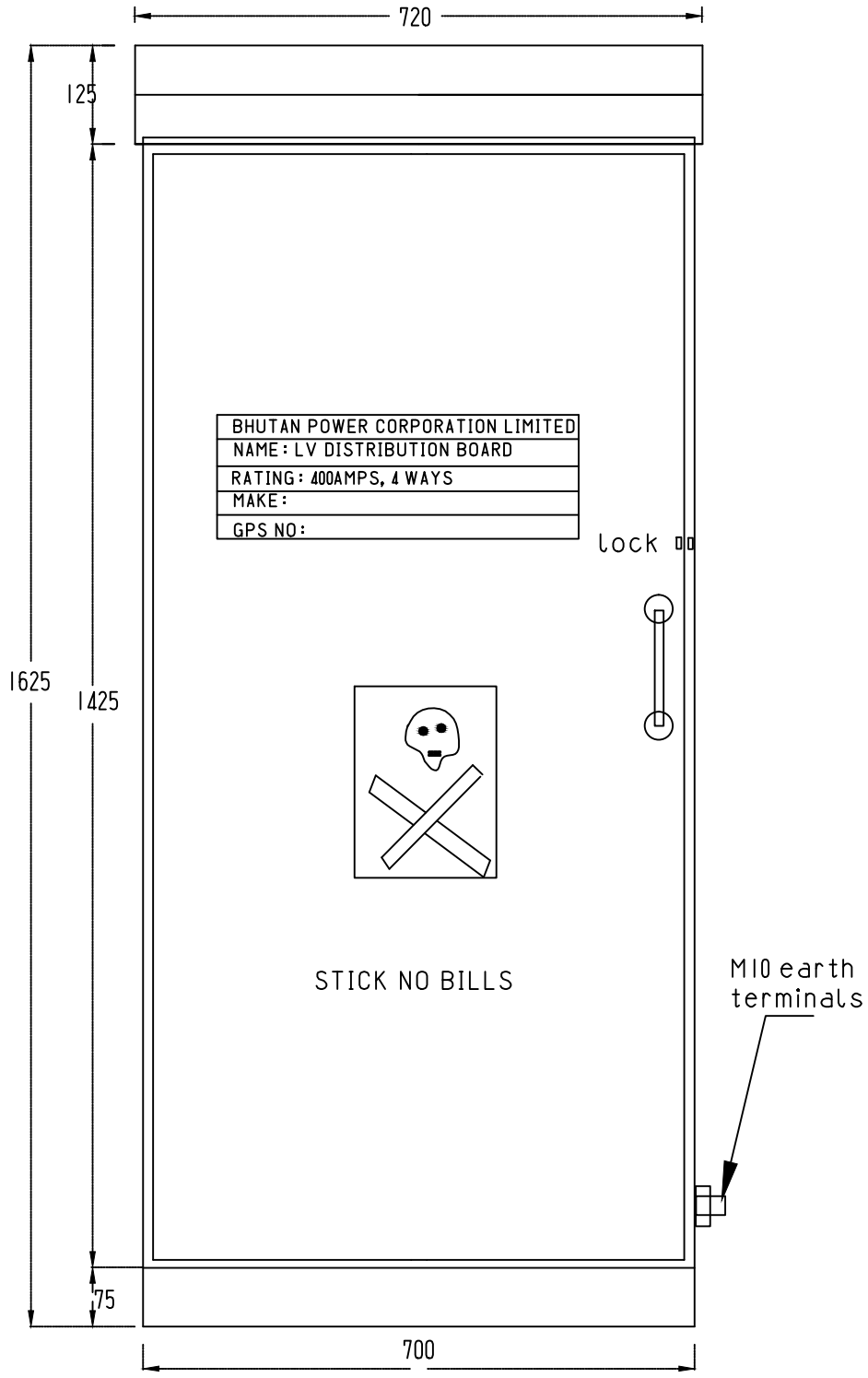

NOTES

1. DIMENSIONS AS SHOWN ARE IN MM.
2. DRAWING NOT TO SCALE.

BHUTAN POWER CORPORATION LIMITED	ENGINEERING DESIGN & CONTRACTS DEPARTMENT	
	TITLE : DISTRIBUTION DESIGN & CONSTRUCTION STANDARD 4WAYS TRANSFORMER DISTRIBUTION PILLAR (FRONT ELEVATION)	
	DRAWING NO. BPC-DDCS-2015-56/1	REVISION 2015

DESIGNATION	NAME	DATE
DRAFTSMAN		
DESIGNER		
DESIGN CHECK		
PROJECT MANAGER		
PROJECT DIRECTOR		

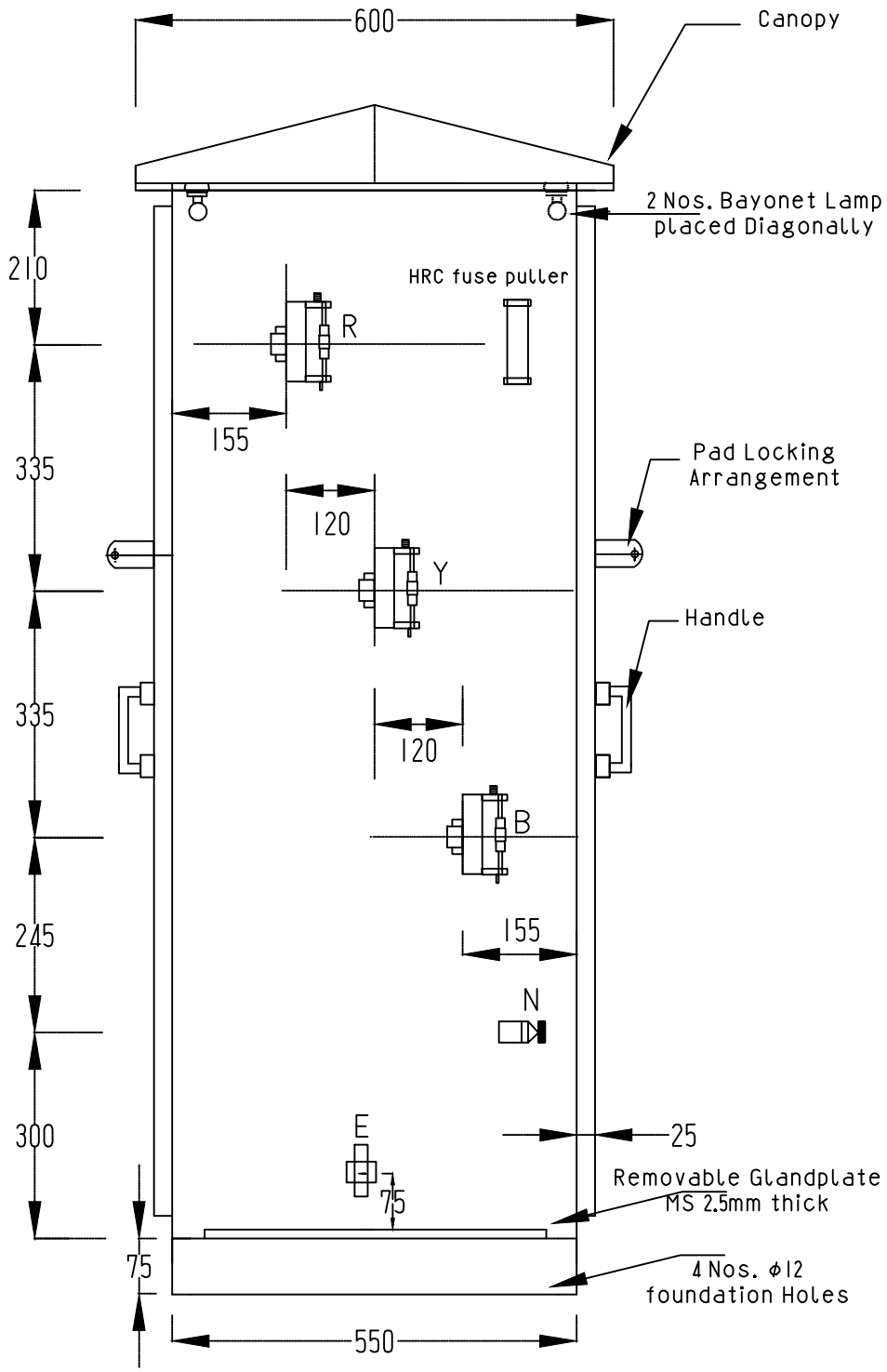

NOTES

1. DIMENSIONS AS SHOWN ARE IN MM. THE PILLAR SHALL BE TWO SIDED DOORS
2. DRAWING NOT TO SCALE.

BHUTAN POWER CORPORATION LIMITED			ENGINEERING DESIGN & CONTRACTS DEPARTMENT
			TITLE : DISTRIBUTION DESIGN & CONSTRUCTION STANDARD 4WAYS TRANSFORMER DISTRIBUTION PILLAR (SIDE ELEVATION)
DESIGNATION	NAME	DATE	
DRAFTSMAN			
DESIGNER			
DESIGN CHECK			
PROJECT MANAGER			DRAWING NO. BPC-DDCS-2015-56/2
PROJECT DIRECTOR			REVISION 2015

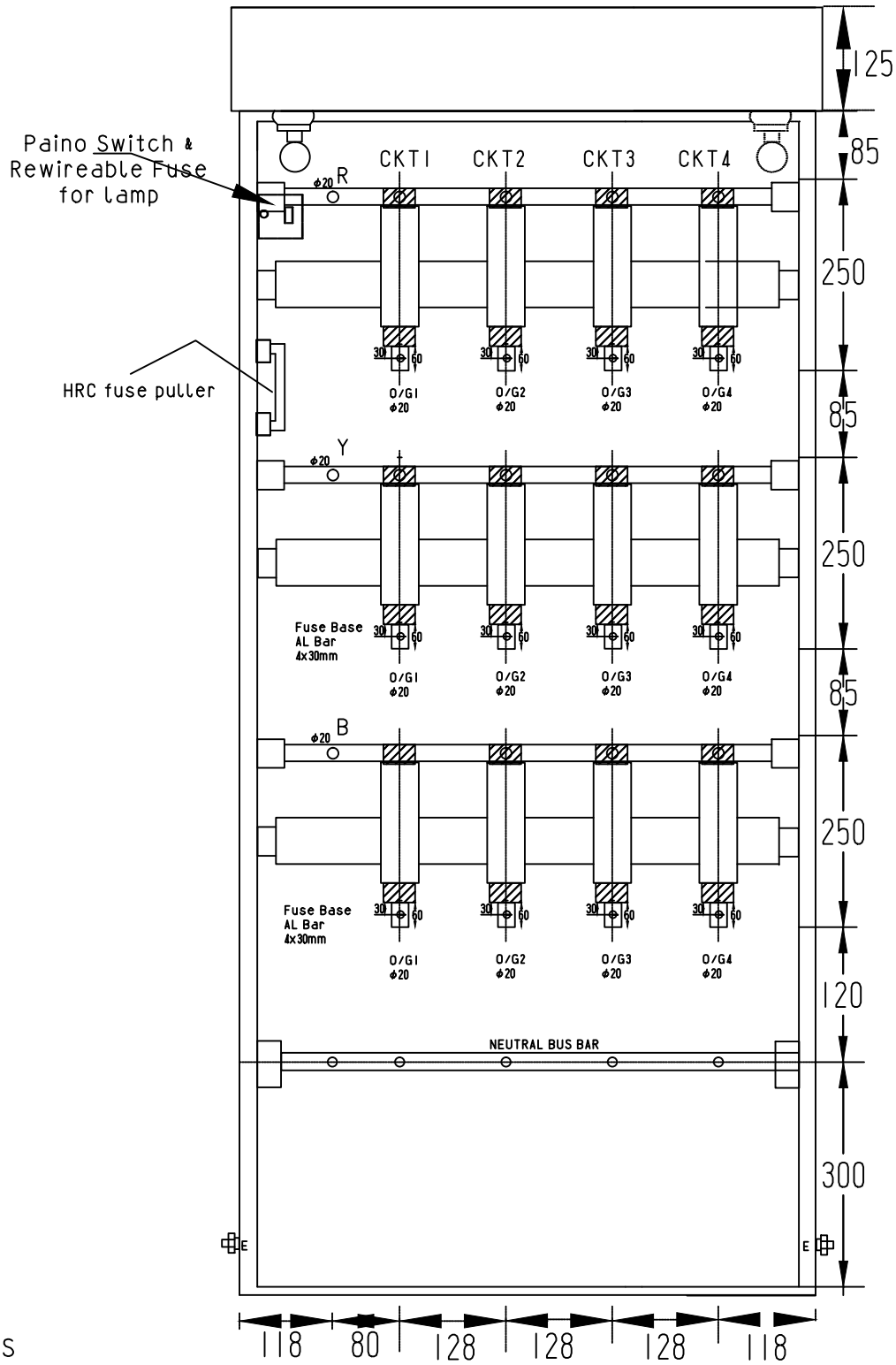

NOTES

1. DIMENSIONS AS SHOWN ARE IN MM.
2. PROVIDE ONE NO. OF FUSE PULLER FOR EVERY DISTRIBUTION BOARD.

BHUTAN POWER CORPORATION LIMITED

ENGINEERING DESIGN & CONTRACTS DEPARTMENT

TITLE : DISTRIBUTION DESIGN & CONSTRUCTION STANDARD

4WAYS TRANSFORMER DISTRIBUTION PILLAR
(FRONT ELEVATION WITHOUT DOOR)

DESIGNATION	NAME	DATE
DRAFTSMAN		
DESIGNER		
DESIGN CHECK		
PROJECT MANAGER		
PROJECT DIRECTOR		

DRAWING NO. BPC-DDCS-2015-56/3

REVISION 2015

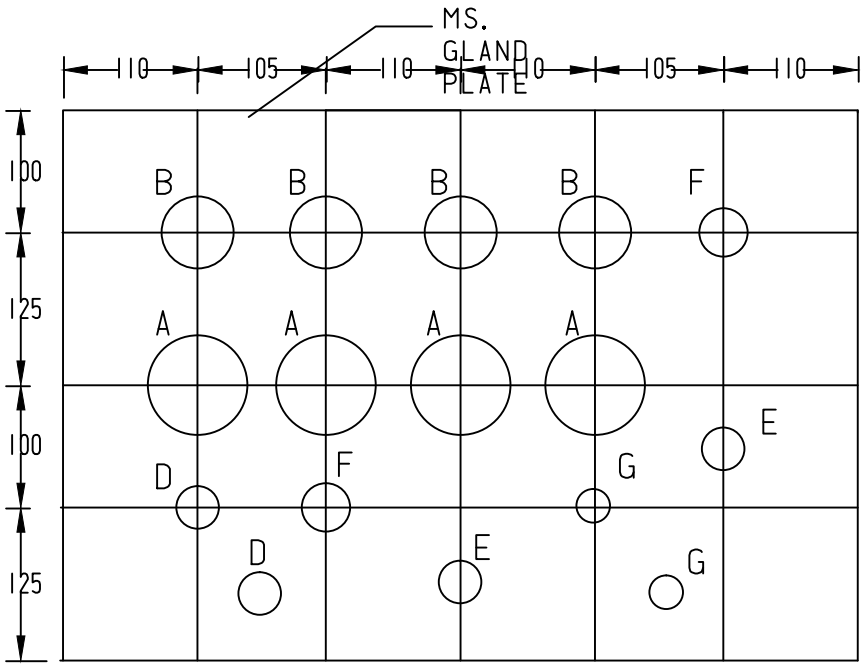

MS. GLAND PLATE	HOLE SIZE
A - 4CX400SQ.MM - KNOCKOUT	3-1/8"
B - 4CX300SQ.MM - KNOCKOUT	2-3/4"
C - 2CX16SQ.MM	1"
D - 4CX50SQ.MM - KNOCKOUT	1-1/2"
E - 4CX150SQ.MM - KNOCKOUT	2"
F - 4CX240SQ.MM - KNOCKOUT	2-1/2"
G - 4CX95SQ.MM - KNOCKOUT	1-3/4"
h - 2CX6SQ.MM	3/4"
I - 2CX10SQ.MM	1"

NOTES

1. DIMENSIONS AS SHOWN ARE IN MM.
2. DRAWING NOT TO SCALE.
3. CORRECT CABLE GLAND SIZE TO BE USED ACCORDINGLY WITH CABLE SIZE

BHUTAN POWER CORPORATION LIMITED

ENGINEERING DESIGN & CONTRACTS DEPARTMENT

TITLE : DISTRIBUTION DESIGN & CONSTRUCTION STANDARD

4WAYS TRANSFORMER DISTRIBUTION PILLAR (GLAND PLATE DETAILS)

DESIGNATION	NAME	DATE
DRAFTSMAN		
DESIGNER		
DESIGN CHECK		
PROJECT MANAGER		
PROJECT DIRECTOR		

DRAWING NO. BPC-DDCS-2015-56/4

REVISION 2015

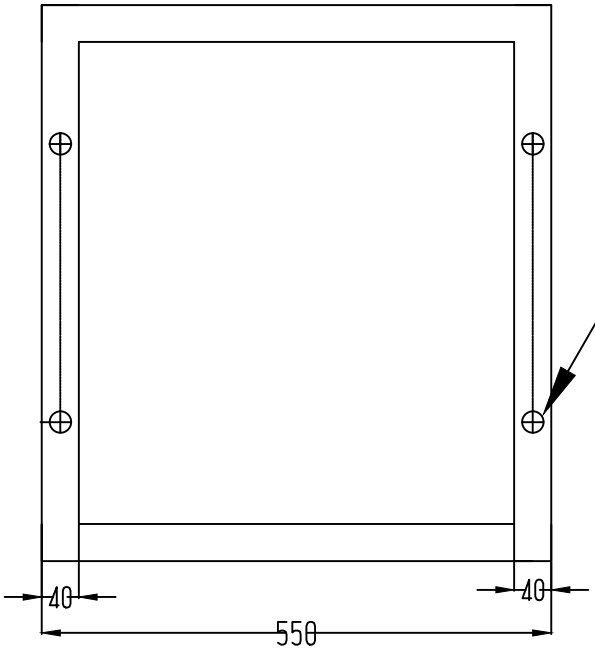

FOUNDATION PLAN

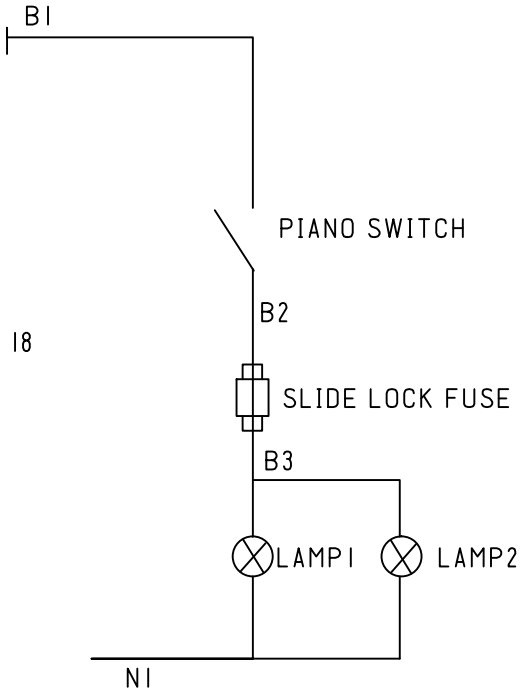

NOTES:
PHASE-50X6MM AL -3NOS.
NEUTRAL -50X6MM AL-1 NO. MATERIAL-THE FEEDER PILLAR (INCLUDING BASE CHANNEL) SHALL BE FABRICATED OUT OF 2.5MM MS SHEET.
PAINT-SEIMENS GREY.
EARTH-1X6X19MM, AL ALLOY.

BHUTAN POWER CORPORATION LIMITED			ENGINEERING DESIGN & CONTRACTS DEPARTMENT
			TITLE : DISTRIBUTION DESIGN & CONSTRUCTION STANDARD 4WAYS TRANSFORMER DISTRIBUTION PILLAR (FOUNDATION DETAILS AND LIGHTING CKT)
DESIGNATION	NAME	DATE	
DRAFTSMAN			
DESIGNER			
DESIGN CHECK			DRAWING NO. BPC-DDCS-2015-56/5
PROJECT MANAGER			REVISION 2015
PROJECT DIRECTOR			

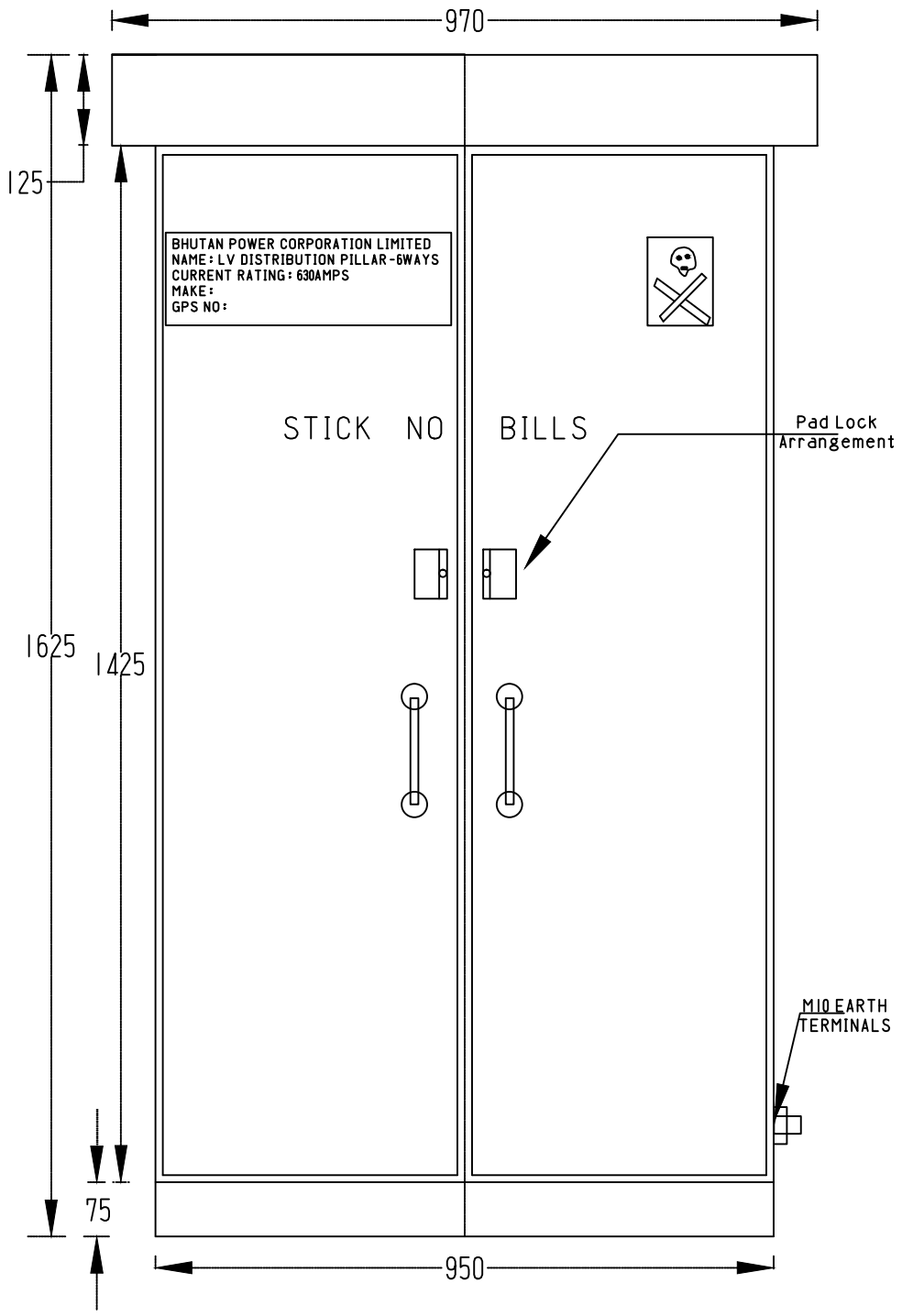

NOTES

1. DIMENSIONS AS SHOWN ARE IN MM.
2. DRAWING NOT TO SCALE.

BHUTAN POWER CORPORATION LIMITED			ENGINEERING DESIGN & CONTRACTS DEPARTMENT
			TITLE : DISTRIBUTION DESIGN & CONSTRUCTION STANDARD 6WAYS TRANSFORMER DISTRIBUTION PILLAR (FRONT ELEVATION)
DESIGNATION	NAME	DATE	
DRAFTSMAN			
DESIGNER			
DESIGN CHECK			
PROJECT MANAGER			
PROJECT DIRECTOR			
			DRAWING NO. BPC-DDCS-2015-57/1 — REVISION 2015

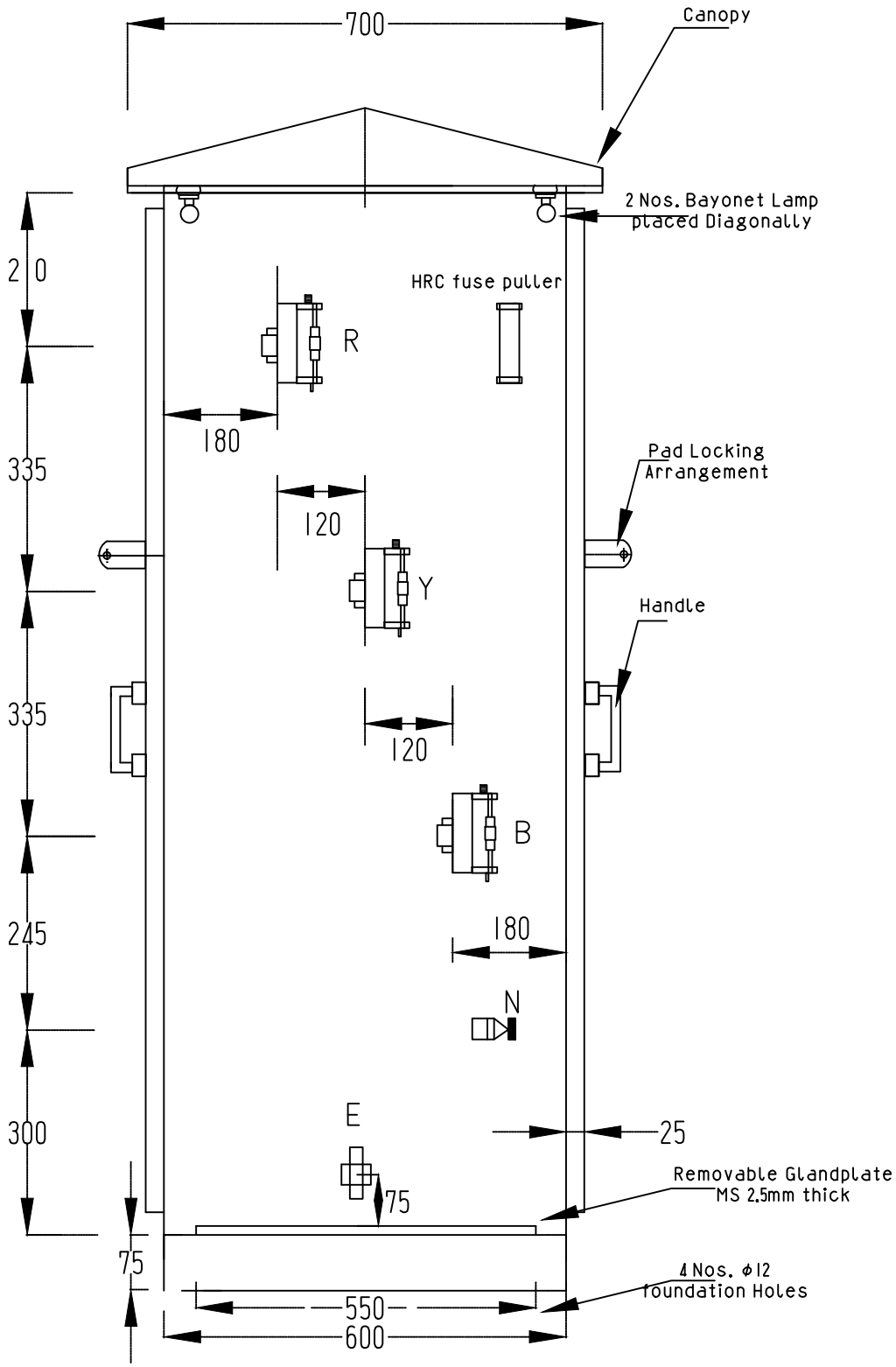

NOTES

1. DIMENSIONS AS SHOWN ARE IN MM.THE PILLAR SHALL BE TWO SIDED DOORS
2. DRAWING NOT TO SCALE.

BHUTAN POWER CORPORATION LIMITED

ENGINEERING DESIGN & CONTRACTS DEPARTMENT

TITLE : DISTRIBUTION DESIGN & CONSTRUCTION STANDARD

6WAYS TRANSFORMER DISTRIBUTION PILLAR (SIDE ELEVATION)

DESIGNATION	NAME	DATE
DRAFTSMAN		
DESIGNER		
DESIGN CHECK		
PROJECT MANAGER		
PROJECT DIRECTOR		

DRAWING NO. BPC-DDCS-2015-57/2

REVISION 2015

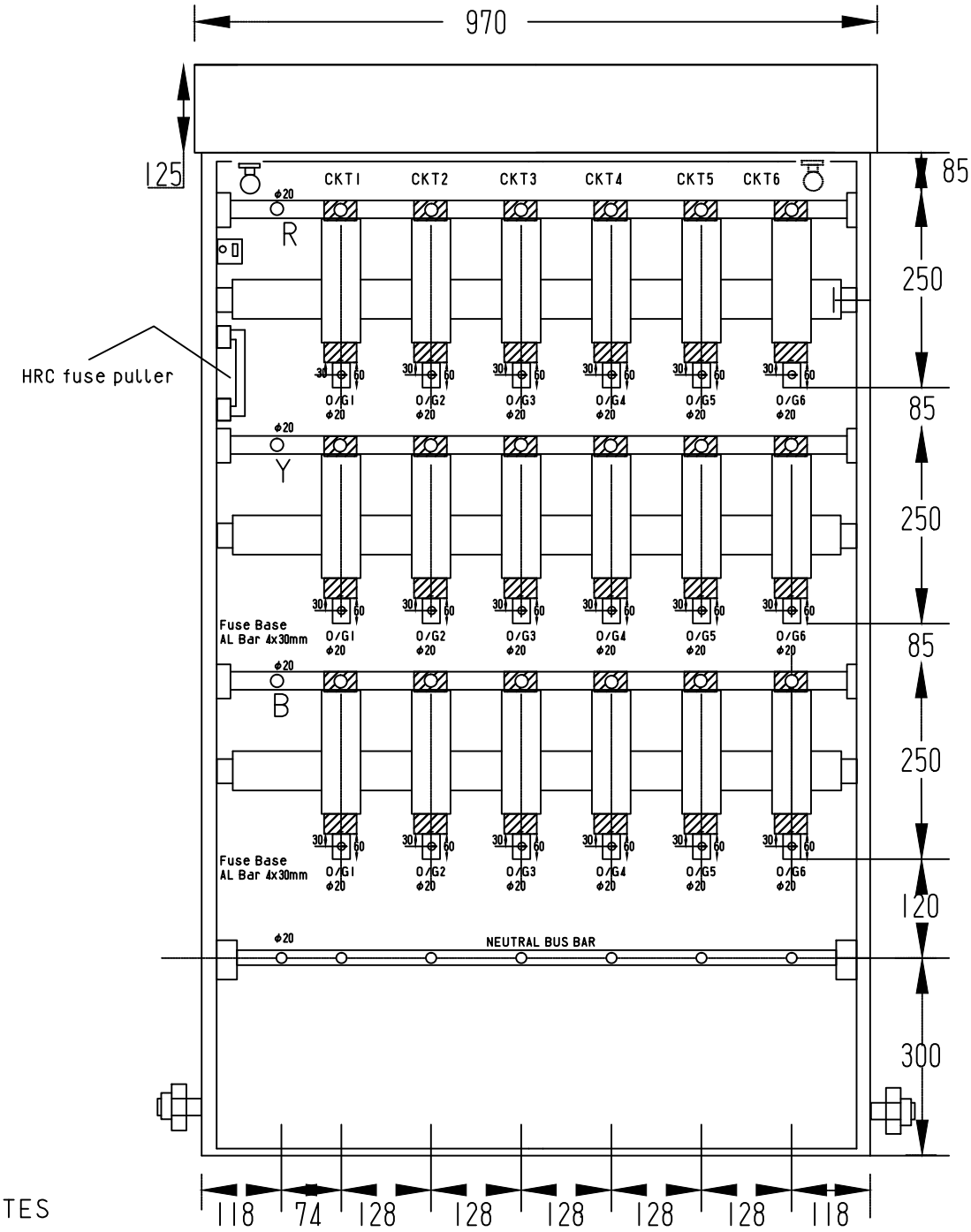

NOTES

1. DIMENSIONS AS SHOWN ARE IN MM.
2. PROVIDE ONE NO. FUSE FULLER FOR EVERY DISTRIBUTION BOARD
3. HRC FUSE RATING:
   400AMPS FOR 315KVA TRANSFORMER
   500AMPS FOR 400-500KVA TRANSFORMER

BHUTAN POWER CORPORATION LIMITED

ENGINEERING DESIGN & CONTRACTS DEPARTMENT

TITLE : DISTRIBUTION DESIGN & CONSTRUCTION STANDARD

6WAYS TRANSFORMER DISTRIBUTION PILLAR
(FRONT ELEVATIONWITHOUT DOOR)

DESIGNATION	NAME	DATE
DRAFTSMAN		
DESIGNER		
DESIGN CHECK		
PROJECT MANAGER		
PROJECT DIRECTOR		

DRAWING NO. BPC-DDCS-2015-57/3

REVISION
2015

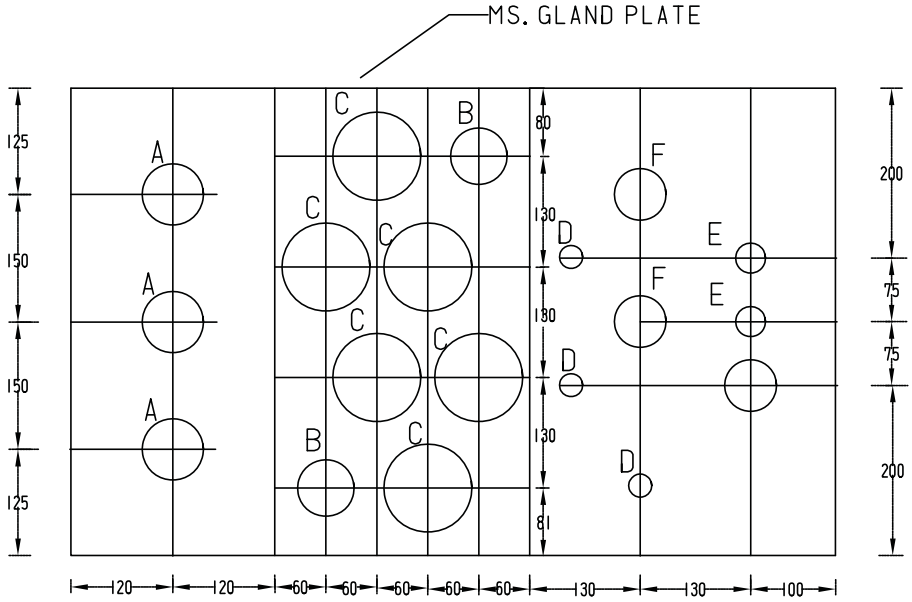

MS. GLAND PLATE	HOLE SIZE
A - 1CX400SQ.MM - KNOCKOUT	3"
B - 4CX300SQ.MM - KNOCKOUT	2-3/4"
C - 4CX400SQ.MM - KNOCKOUT	3-1/8"
D - 1CX300SQ.MM - KNOCKOUT	1-1/2"
E - 4CX150SQ.MM - KNOCKOUT	2"
F - 4CX240SQ.MM - KNOCKOUT	2-1/2"
G - 4CX95SQ.MM - KNOCKOUT	1-3/4"
h - 2CX6SQ.MM	3/4"
I - 2CX10SQ.MM	1"

NOTES

1. DIMENSIONS AS SHOWN ARE IN MM.
2. DRAWING NOT TO SCALE.
3. CORRECT CABLE GLAND SIZE TO BE USED ACCORDINGLY WITH CABLE SIZE

BHUTAN POWER CORPORATION LIMITED

ENGINEERING DESIGN & CONTRACTS DEPARTMENT

TITLE : DISTRIBUTION DESIGN & CONSTRUCTION STANDARD

6WAYS TRANSFORMER DISTRIBUTION PILLAR (GLAND PLATE DETAILS)

DESIGNATION	NAME	DATE
DRAFTSMAN		
DESIGNER		
DESIGN CHECK		
PROJECT MANAGER		
PROJECT DIRECTOR		

DRAWING NO. BPC-DDCS-2015-57/4

REVISION 2015

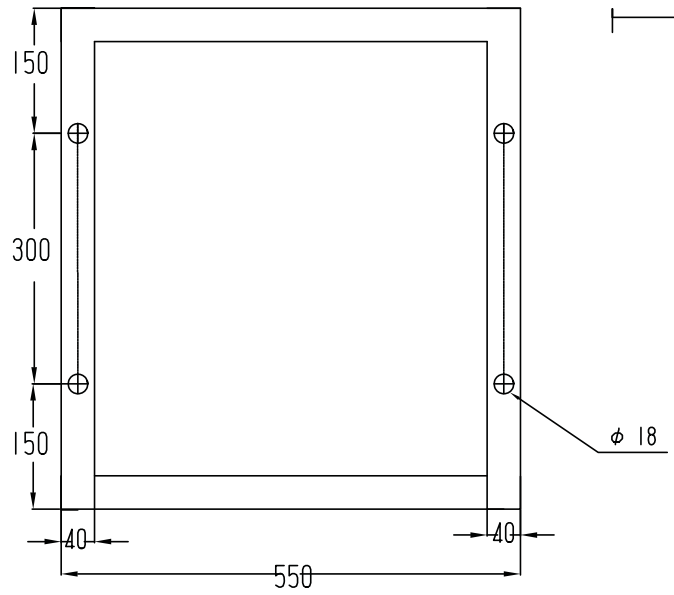

FOUNDATION PLAN

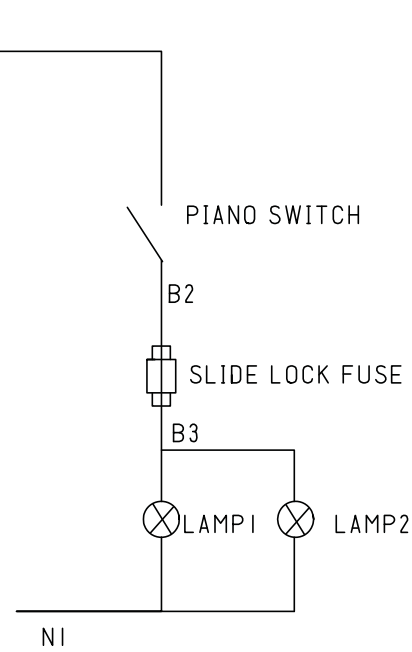

NOTES:
PHASE-50X10MM AL -3NOS.
NEUTRAL -50X10MM AL-1 NO. MATERIAL-THE FEEDER PILLAR (INCLUDING BASE CHANNEL) SHALL BE FABRICATED OUT OF 2.5MM MS SHEET.
PAINT-SEIMENS GREY.
EARTH-1X6X19MM, AL ALLOY.

NOTES
1. DIMENSIONS AS SHOWN ARE IN MM.
2. DRAWING NOT TO SCALE.

BHUTAN POWER CORPORATION LIMITED

ENGINEERING DESIGN & CONTRACTS DEPARTMENT

TITLE : DISTRIBUTION DESIGN & CONSTRUCTION STANDARD

6WAYS TRANSFORMER DISTRIBUTION PILLAR (FOUNDATION DETAILS AND LIGHTING CKT)

DESIGNATION	NAME	DATE
DRAFTSMAN		
DESIGNER		
DESIGN CHECK		
PROJECT MANAGER		
PROJECT DIRECTOR		

DRAWING NO. BPC-DDCS-2015-57/5

REVISION 2015

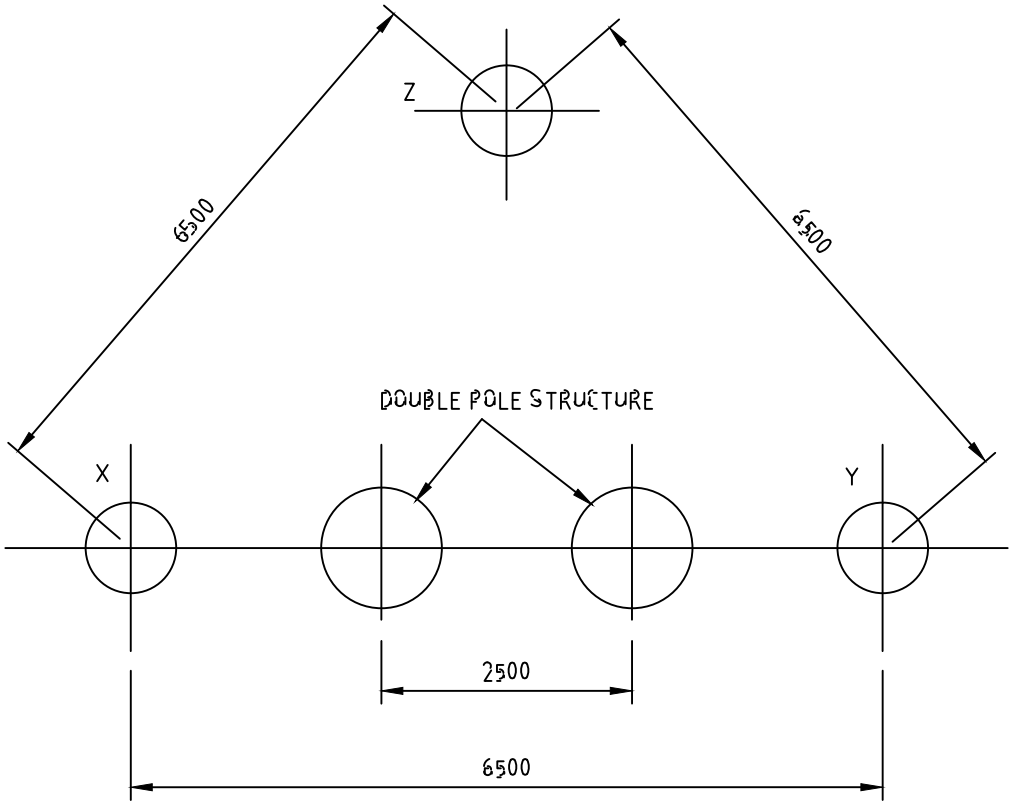

NOTES

1. THE CONNECTIONS TO THE THREE EARTH ELECTRODES SHOULD BE AS FOLLOWS:
   a. TO ONE OF THE EARTH ELECTRODES ON EITHER SIDE OF DOUBLE POLE STRUCTURE (X-Y)
      ONE DIRECT CONNECTION FROM 33kV OR 11kV NEUTRAL LIGHTNING ARRESTERS AND TRANSFORMER TANK
   b. TO EACH OF THE REMAINING TWO EARTH-ELECTRODES
      (i) ONE SEPARATE CONNECTION FROM THE NEUTRAL OF THE LOW VOLTAGE SIDE OF THE TRANSFORMER.
      (ii) ONE SEPARATE CONNECTION FROM TERMINAL EARTH OF TRANSFORMER LT PANEL .
      (iii) ONE SEPARATE CONNECTION FROM BODY OF TRANSFORMER LT PANEL .
2. 25 x 6 mm GALVANISED IRON STRAP LEADS.
3. THREE NOS. 40mm x 2500mm PIPE ELECTODES.
4. EARTH ELECTRODES X,Y AND Z TO BE BONDED TOGETHER USING 25x6mm GALVANISED IRON STRAP BURIED 100mm BELOW GROUND LEVEL.
5. REFER DWG BPC-DDCS-2015-66 FOR EARTH POINTS ON TRANSFORMER AND STRUCTURE.

BHUTAN POWER CORPORATION LIMITED

ENGINEERING DESIGN & CONTRACTS DEPARTMENT

TITLE : DISTRIBUTION DESIGN & CONSTRUCTION STANDARD

33 kV OR 11 kV / 415 V DISTRIBUTION SUB-STATION
PIPE EARTHING

DESIGNATION	NAME	DATE
DRAFTSMAN		
DESIGNER		
DESIGN CHECK		
PROJECT MANAGER		
PROJECT DIRECTOR		

DRAWING NO. BPC-DDCS-2015-64

REVISION 2015

INSTALLATION OF DIRECTLY BURIED CABLES

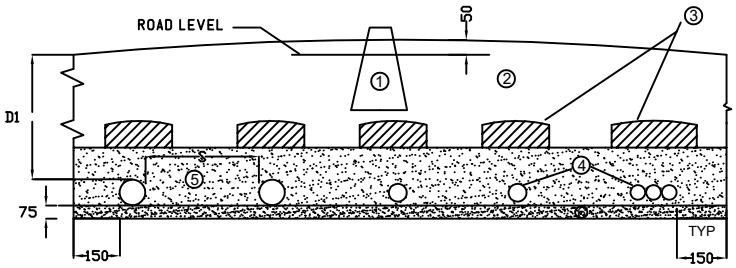

DIRECTLY BURIED CABLES IN SINGLE LAYER

LEGEND

(1) - CABLE ROUTE MARKER IF PROVIDED..
(2) - EARTH BACK FILLED & RAMMED.
(3) - PROTECTIVE COVERS, AS PER IS 1255
- RCC/SLABS/BRICKS FOR HIGH VOLTAGE CABLES
(4) - ARMOURED POWER CABLE
(5) - FINE SAND/ RIDDLED SOIL COMPACTED.
(6) - SAND BEDDING

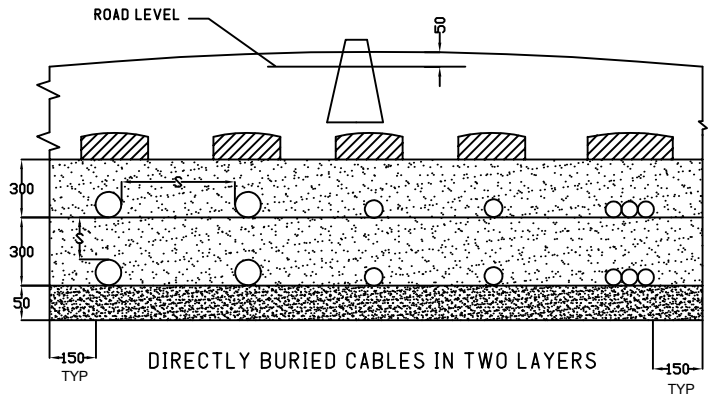

DIRECTLY BURIED CABLES IN TWO LAYERS

DIMENSION (MIN)	1100V GRADE CABLES	11kV	33kV
D1	600	1000	1000
S	d- BETWEEN CABLES OF SAME CLASS * 300mm - BETWEEN CABLES OF DIFFERENT CLASS * 400mm - BETWEEN 1-CORE POWER CABLE AND COMMUNICATION CABLE * 400mm - BETWEEN MULTICORE POWER CABLE AND COMMUNICATION CABLE		

d. - OVER ALL DIAMETER OF THE BIGGER OF THE TWO CABLE
* - SPACING SHALL BE KEPT BOTH HORIZONTALLY AND VERTICALLY

NOTE

1. SINGLE CORE CABLES SHALL BE RUN IN TREFOIL FORMATION AND SHALL BE BOUND BY PLASTIC TAPES OR 3 mm DIA NYLON CORE EVERY 750mm
2. PLASTIC MARKING TAPE TO BE USED FOR UG WHICH SHALL RUN ALONG THE LENGTH OF THE CABLE AND SHALL HAVE CABLE MARKING AT EVERY 1.5METER LENGTH
3. CABLE IDENTIFICATION TAG SHALL BE TIED AT BOTH ENDS OF THE CABLE AND ALSO AT AN INTERVAL OF 15 METRES.
4. IF THE MINIMUM CLEARANCE AS INDICATED IN THE ABOVE TABLE FOR CABLES OF DIFFERENT CLASSES ARE NOT FEASIABLE, BRICK BARRIERS SHALL BE USED BETWEEN ADJACENT CABLES.
5. GI./HUME PIPE SHALL BE PROVIDED FOR ROAD CROSSING.

BHUTAN POWER CORPORATION LIMITED		ENGINEERING AND RESEARCH DEPARTMENT	
		TITLE : DISTRIBUTION DESIGN & CONSTRUCTION STANDARD INSTALLATION PRACTICE - DIRECTLY BURRIED CABLES	
	NAME	DATE	
DESIGNED BY			
CHECKED BY		DRAWING NO. BPC-DDCS-2020-1A	REVISION 2020
APPROVED BY			

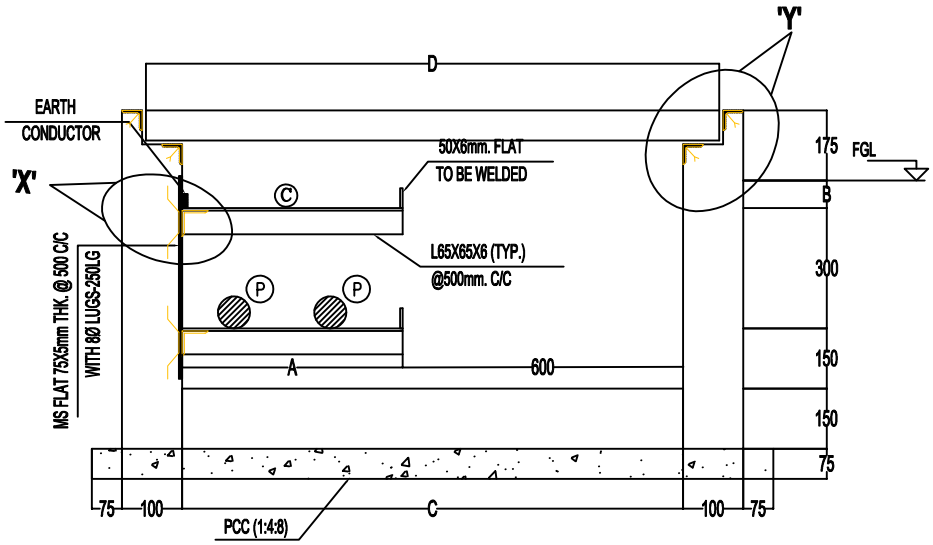

TRENCH FOR BPC CABLES

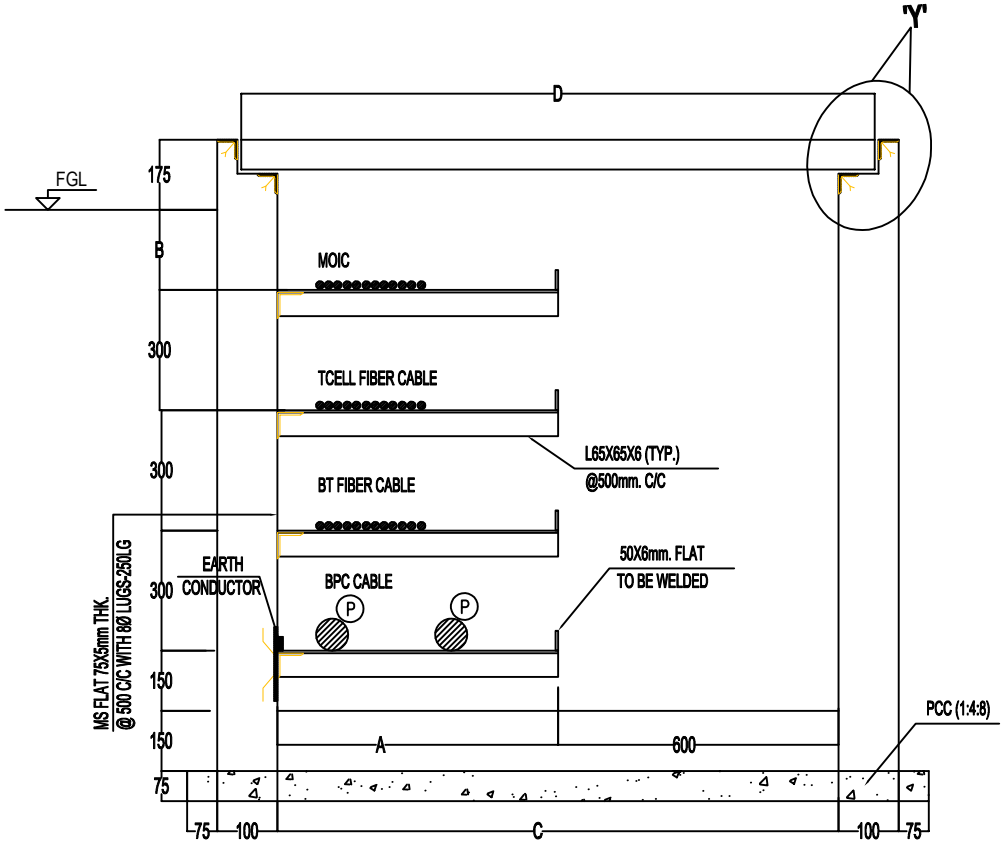

TRENCH FOR OTHER UTILITIES

BHUTAN POWER CORPORATION LIMITED			ENGINEERING AND RESEARCH DEPARTMENT
			TITLE : DISTRIBUTION DESIGN & CONSTRUCTION STANDARD
			INSTALLATION PRACTICE -INTERNAL BPC & MULTI- UTILITY
	NAME	DATE	
DESIGNED BY			
CHECKED BY			DRAWING NO. BPC-DDCS-2020-IB & C
APPROVED BY			REVISION 2020

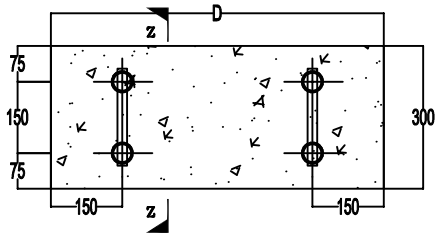

RCC cover slab plan

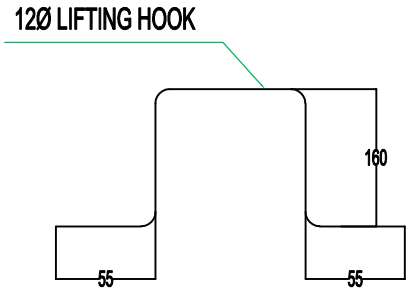

DET. OF LIFTING HOOK

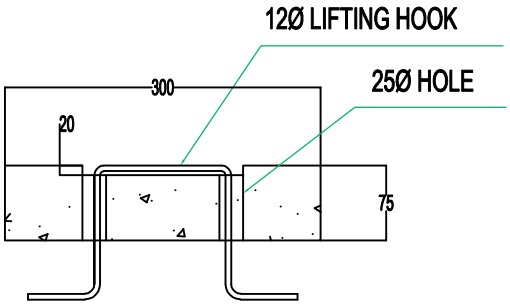

SECTION Z-Z COVER SLAB

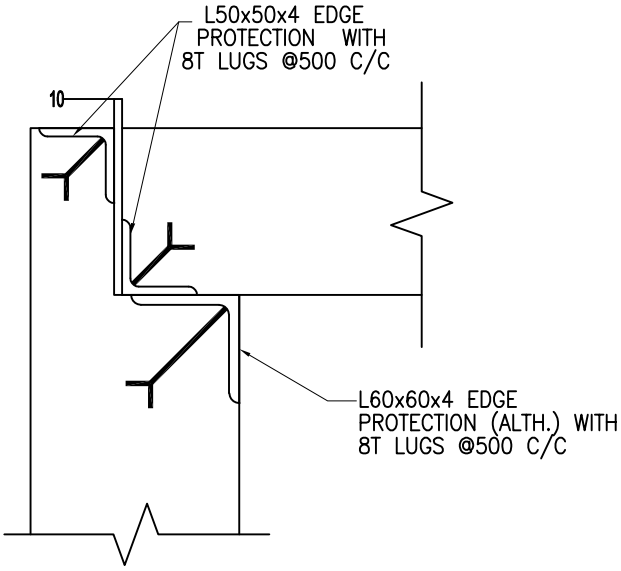

DETAIL Y–Y

TYPICAL DETAIL OF CABLE TRENCH EDGE PROTECTION

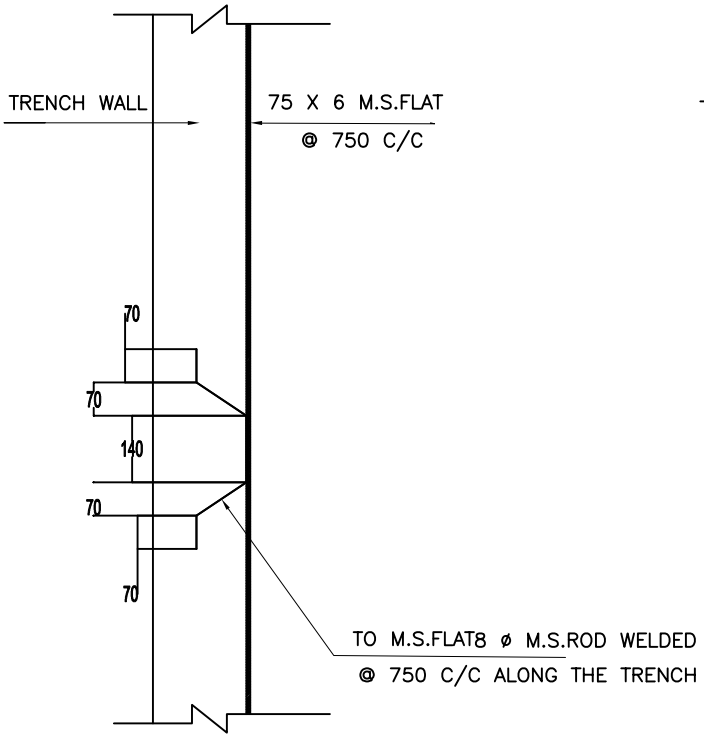

DETAIL X–X : ANCHORING

75X6 M.S. FLAT

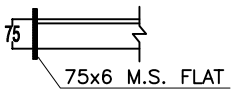

SECTION D–D

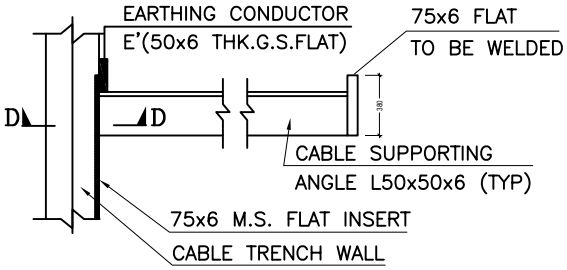

TYP. CABLE SUPPORT EARTH CONDUCTOR

E' RUNS ON TOP TIER ONLY

BHUTAN POWER CORPORATION LIMITED			ENGINEERING AND RESEARCH DEPARTMENT
			TITLE : DISTRIBUTION DESIGN & CONSTRUCTION STANDARD
			INSTALLATION PRACTICE -DETAILS OF SLABS, LIFTING HOOKS &EDGE
	NAME	DATE	
DESIGNED BY			
CHECKED BY			DRAWING NO. BPC-DDCS-2020-IB & C / REVISION 2020
APPROVED BY			

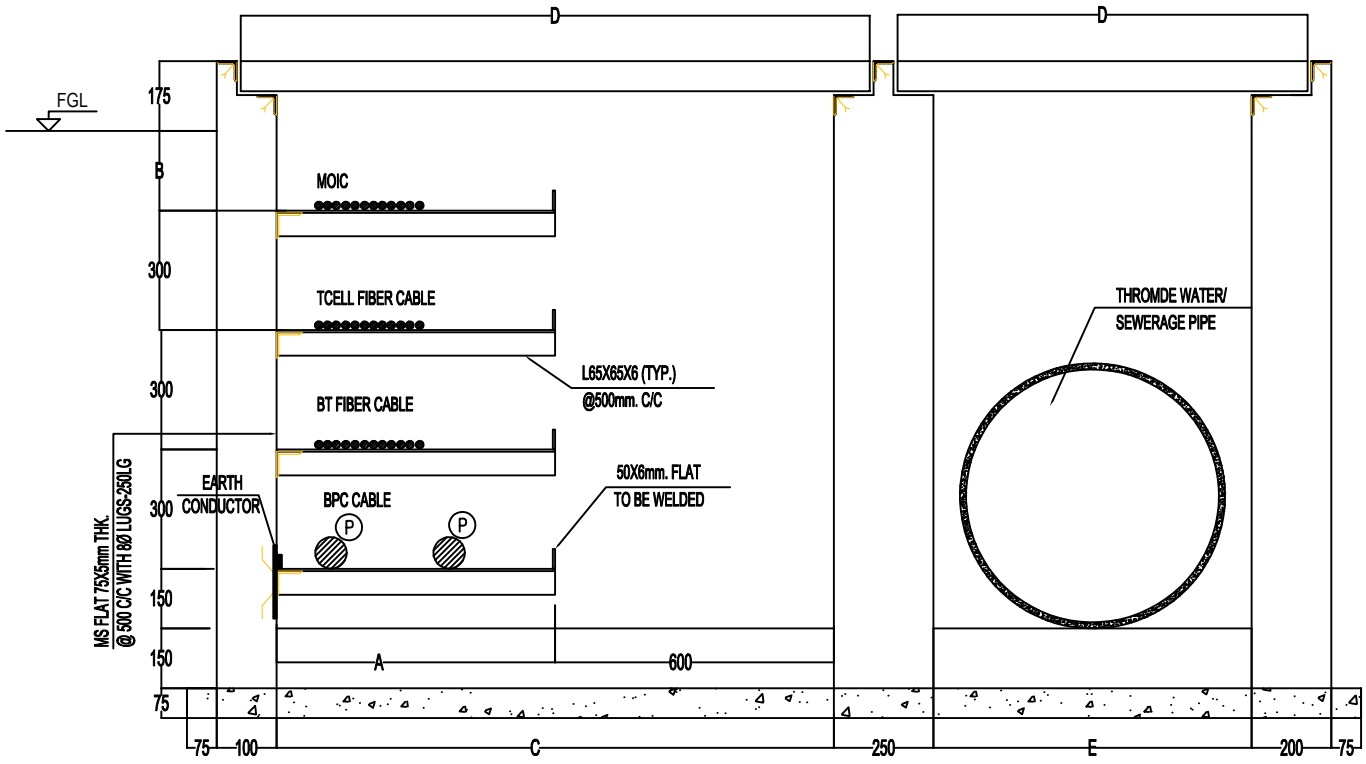

TRENCH FOR OTHER UTILITIES

BPC	BHUTAN POWER CORPORATION LIMITED	ENGINEERING AND RESEARCH DEPARTMENT	
		TITLE : DISTRIBUTION DESIGN & CONSTRUCTION STANDARD INSTALLATION PRACTICE -INTERNAL BPC & MULTI- UTILITY	
	NAME	DATE	
DESIGNED BY			
CHECKED BY		DRAWING NO. BPC-DDCS-2020-IC	REVISION 2020
APPROVED BY			

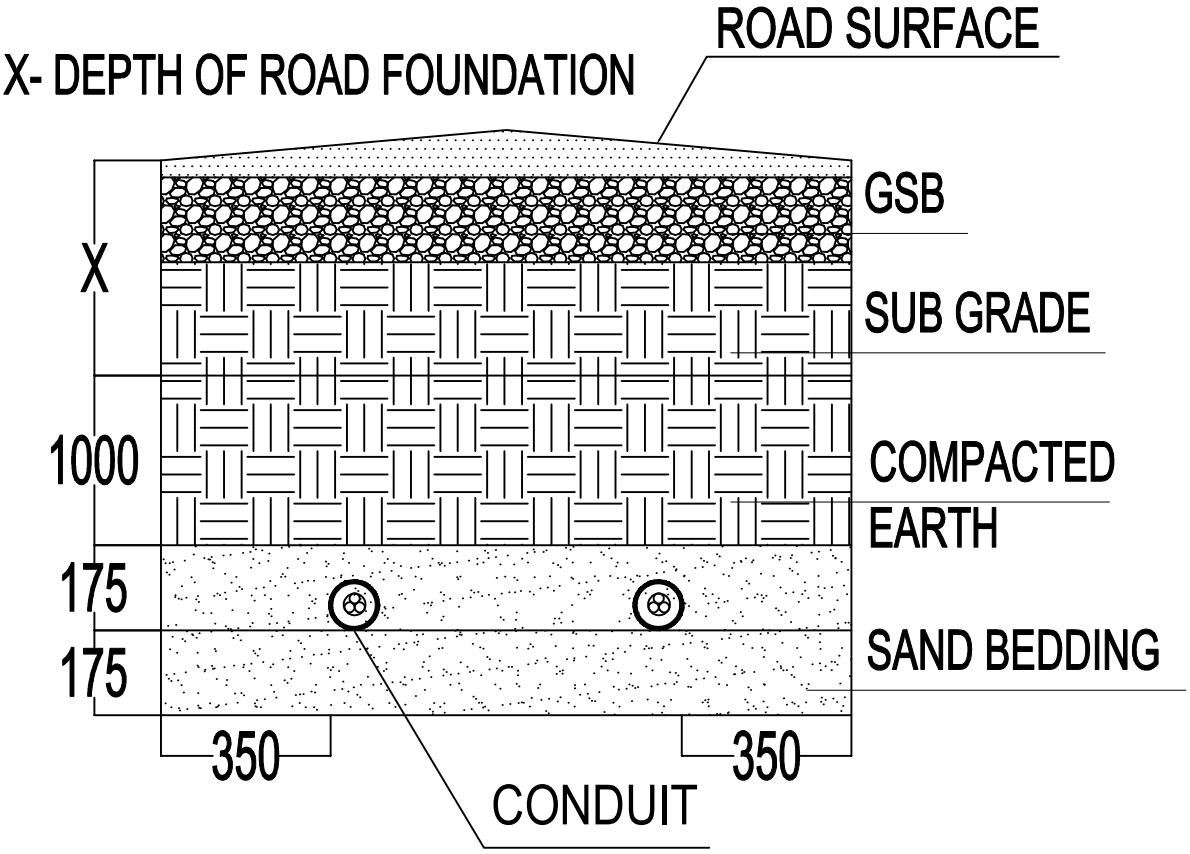

DIRECTLY BURIED CABLES WITH CONDUIT

BHUTAN POWER CORPORATION LIMITED			ENGINEERING AND RESEARCH DEPARTMENT
			TITLE : DISTRIBUTION DESIGN & CONSTRUCTION STANDARD INSTALLATION PRACTICE -CONDUIT METHOD
	NAME	DATE	
DESIGNED BY			
CHECKED BY			DRAWING NO. BPC-DDCS-2020-ID / REVISION 2020
APPROVED BY			

11kV 750kVA (7T)

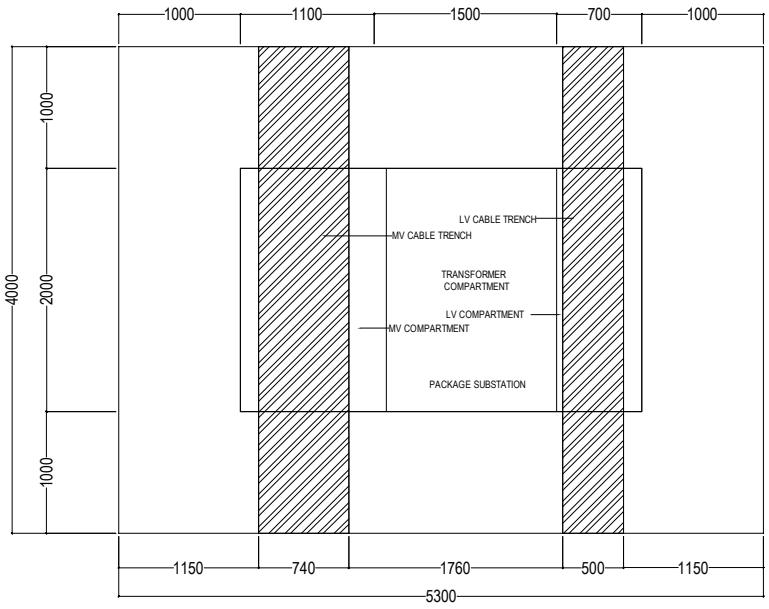

PLAN VIEW

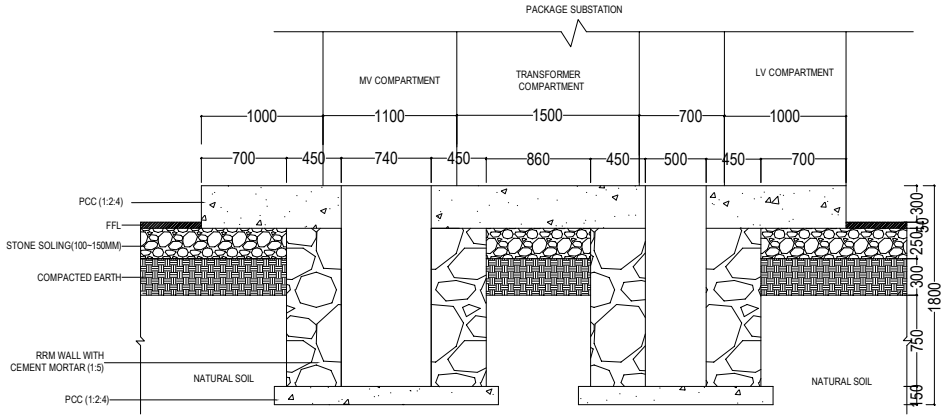

SECTIONAL VIEW

NOTES:-

1. ALL DIMENSIONS SHALL BE IN MM UNLESS OTHERWISE SPECIFIED.
2. SUITABLE CUT OUTS IN TRENCHES FOR CABLE ENTRY/EXIT FROM EQUIPMENT SHALL BE MADE.
3. THE MINIMUM PERMISSIBLE BENDING RADII FOR 33 kV CABLES :- 15D ("D "IS THE OUTER DIAMETER OF THE CABLE) SHALL BE MAINTAINED DURING INSTALLATION.
4. A SLOPE OF 1:100 SHALL BE MAINTAINED ALONG THE RUN OF THE CABLE AND PERPENDICULAR TO THE RUN OF THE CABLE .
5. A PROPER DRAINAGE SHALL BE MAINTAINED AT THE SITE

BHUTAN POWER CORPORATION LIMITED

ENGINEERING AND RESEARCH DEPARTMENT

TITLE : DISTRIBUTION DESIGN & CONSTRUCTION STANDARD

UNITIZED SUBSTATION FOUNDATION-(7TON)

TITLE	NAME	DATE
DESIGNED BY		
CHECKED BY		
APPROVED BY		

DRAWING NO. BPC-DDCS-2020-37A

REVISION 2020

33kV 1250/1000kVA (9T)

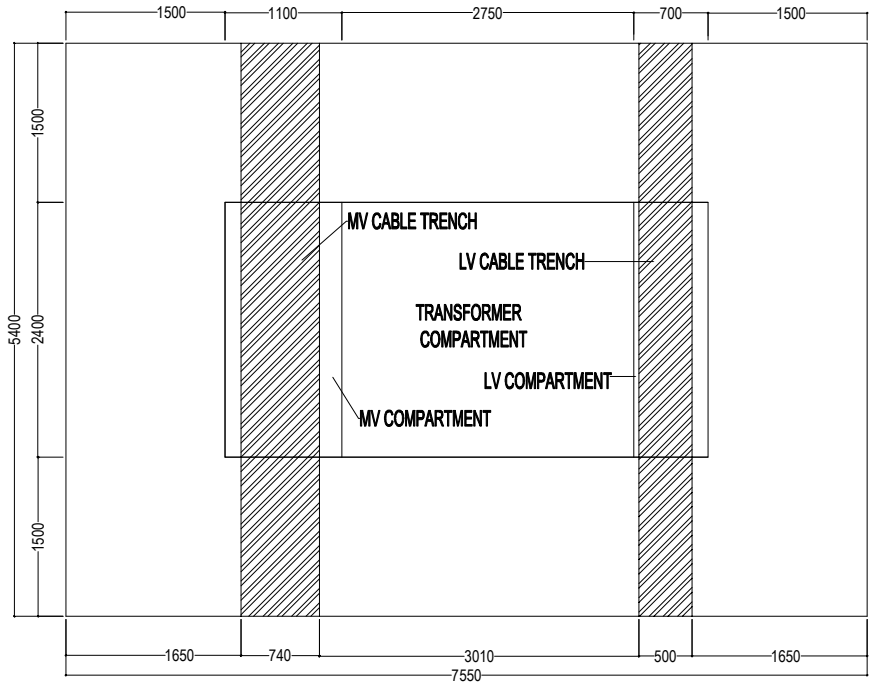

PLAN VIEW

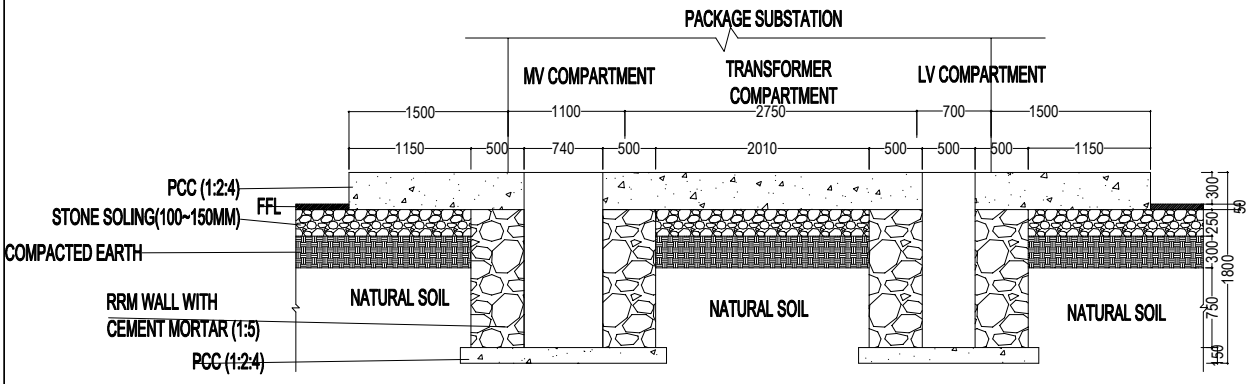

SECTIONAL VIEW

NOTES:-

1. ALL DIMENSIONS SHALL BE IN MM UNLESS OTHERWISE SPECIFIED.
2. SUITABLE CUT OUTS IN TRENCHES FOR CABLE ENTRY/EXIT FROM EQUIPMENT SHALL BE MADE.
3. THE MINIMUM PERMISSIBLE BENDING RADII FOR 33 kV CABLES :- 15D ("D "IS THE OUTER DIAMETER OF THE CABLE) SHALL BE MAINTAINED DURING INSTALLATION.
4. A SLOPE OF 1:100 SHALL BE MAINTAINED ALONG THE RUN OF THE CABLE AND PERPENDICULAR TO THE RUN OF THE CABLE .
5. A PROPER DRAINAGE SHALL BE MAINTAINED AT THE SITE

BHUTAN POWER CORPORATION LIMITED			ENGINEERING AND RESEARCH DEPARTMENT
			TITLE : DISTRIBUTION DESIGN & CONSTRUCTION STANDARD UNITIZED SUBSTATION FOUNDATION (9TON)
TITLE	NAME	DATE	
DESIGNED BY			
CHECKED BY			DRAWING NO. BPC-DDCS-2020-37B
APPROVED BY			REVISION 2020

33kV 750kVA (8T)

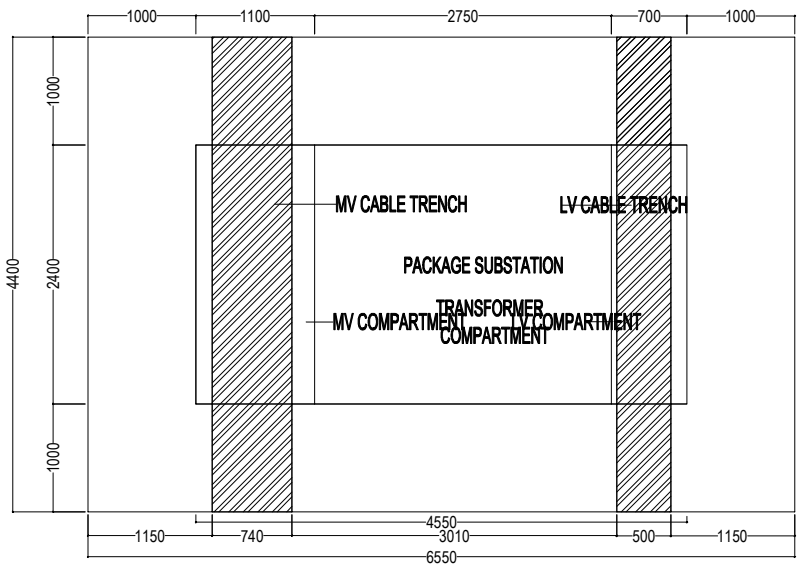

PLAN VIEW

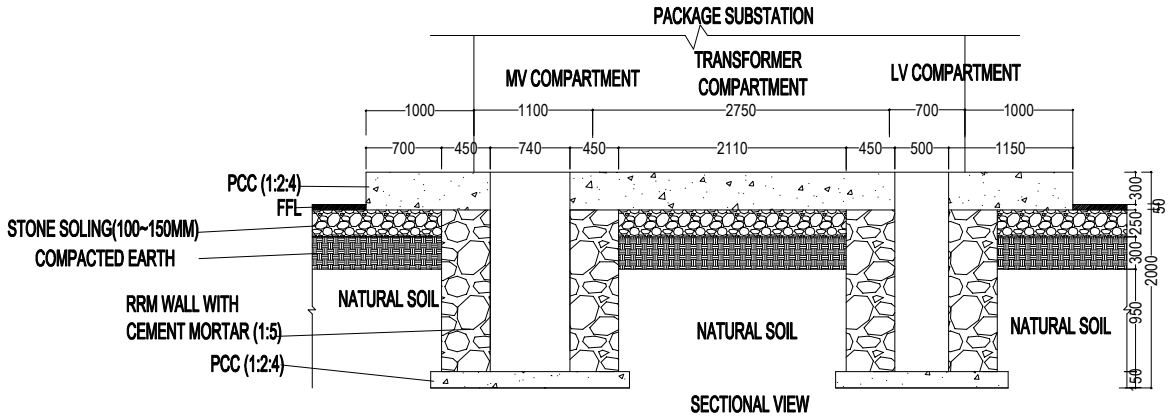

SECTIONAL VIEW

NOTES:-

1. ALL DIMENSIONS SHALL BE IN MM UNLESS OTHERWISE SPECIFIED.
2. SUITABLE CUT OUTS IN TRENCHES FOR CABLE ENTRY/EXIT FROM EQUIPMENT SHALL BE MADE.
3. THE MINIMUM PERMISSIBLE BENDING RADII FOR 33 kV CABLES :- 15D ("D "IS THE OUTER DIAMETER OF THE CABLE) SHALL BE MAINTAINED DURING INSTALLATION.
4. A SLOPE OF 1:100 SHALL BE MAINTAINED ALONG THE RUN OF THE CABLE AND PERPENDICULAR TO THE RUN OF THE CABLE .
5. A PROPER DRAINAGE SHALL BE MAINTAINED AT THE SITE

BHUTAN POWER CORPORATION LIMITED

ENGINEERING AND RESEARCH DEPARTMENT

TITLE : DISTRIBUTION DESIGN & CONSTRUCTION STANDARD

UNITIZED SUBSTATION FOUNDATION-(8TON)

TITLE	NAME	DATE
DESIGNED BY		
CHECKED BY		
APPROVED BY		

DRAWING NO. BPC-DDCS-2020-37C

REVISION 2020

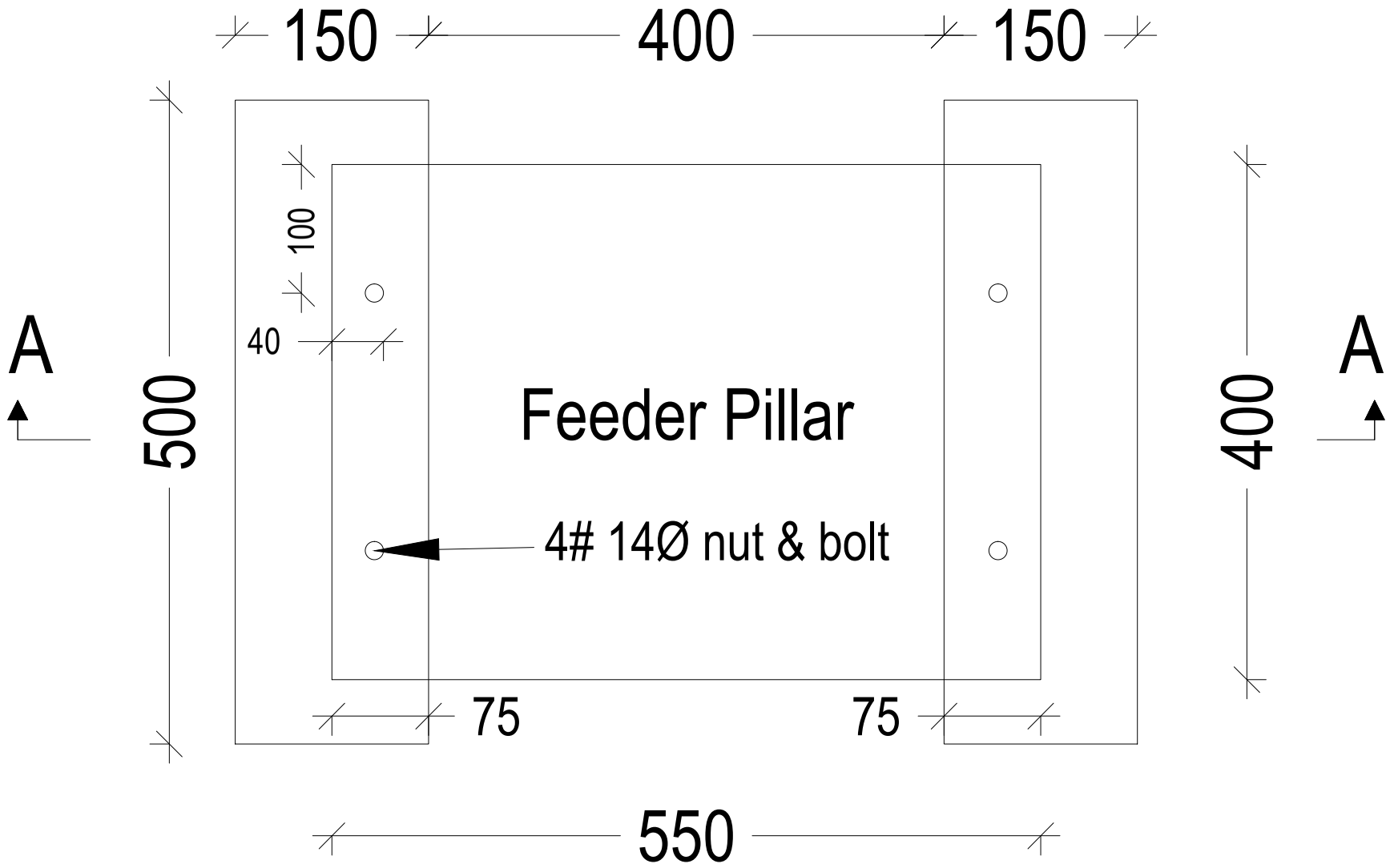

PLAN VIEW

ALL DIMENSIONS ARE IN MILLIMETERS

BHUTAN POWER CORPORATION LIMITED DISTRIBUTION & CONSTRUCTION DEPARTMENT	PROJECT: Power Supply Arrangement to Quarantine Centers DRG. No 01	DATE 24.03.2022 A4 SIZE 0 REV.	DESIGN & DRAWN BY:	NAME YONTEN JAMTSHO	SIGN	APPROVED BY:	NAME PUSHPA LAL ACHARYA	SIGN	DRAWING TITLE: FEEDER PILLAR FOUNDATION	SCALE NTS PROJECTION	

This drawing and design is the property of BPC and must not be passed on to any person who is not authorized by organization nor can be copied or lent without prior permission in writing from the concerned authority.

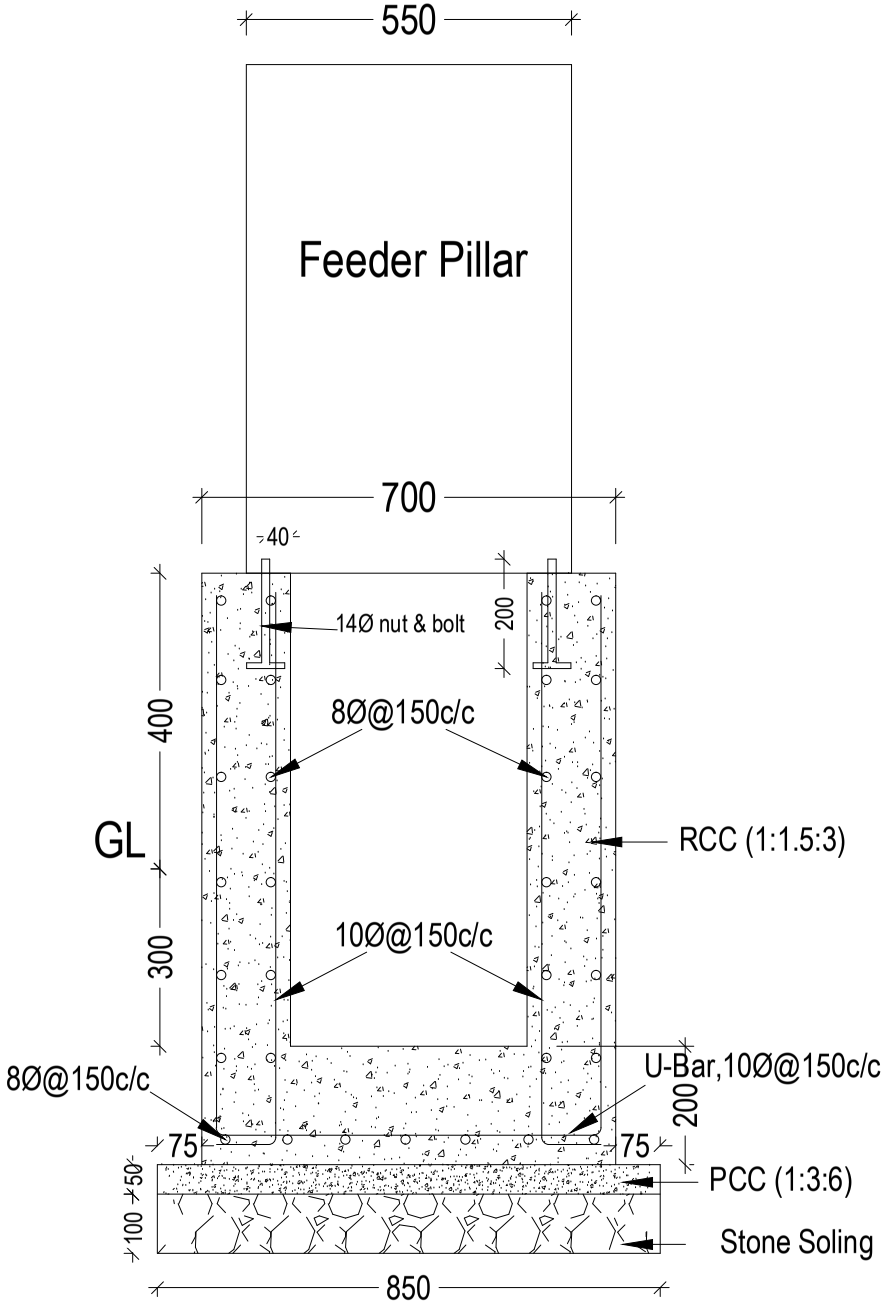

SECTION A-A

ALL DIMENSIONS ARE IN MILLIMETERS

This drawing and design is the property of BPC and must not be passed on to any person who is not authorized by organization nor can be copied or lent without prior permission in writing from the concerned authority.

BHUTAN POWER CORPORATION LIMITED DISTRIBUTION & CONSTRUCTION DEPARTMENT	PROJECT: Power Supply Arrangement to Quarantine Centers	DATE 24.03.2022	DESIGN & DRAWN BY:	NAME YONTEN JAMTSHO	SIGN	APPROVED BY:	NAME PUSHPA LAL ACHARYA	SIGN	DRAWING TITLE: FEDDER PILLAR FOUNDATION	SCALE NTS
	DRG. No 02	A4 SIZE 0 REV.								PROJECTION

CIRCULAR ARRANGEMENT

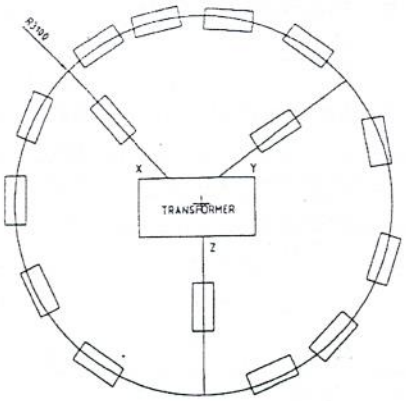

15

RECTANGULAR ARRANGEMENT

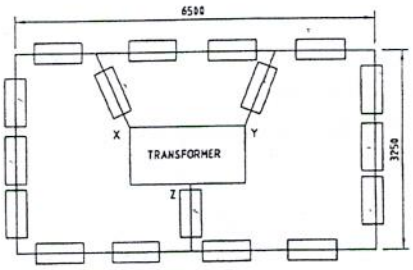

17

TRIANGULAR ARRANGEMENT

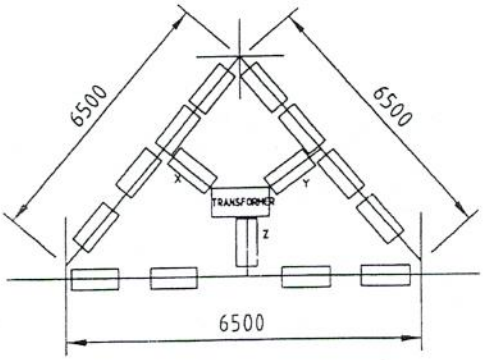

15

NOTES

THE CONNECTIONS POINTS SHOULD BE AS FOLLOWS:

a. TO ONE OF THE EARTH POINTS ON OTHER SIDE OF DOUBLE POLE STRUCTURE (X-Y)
ONE DIRECT CONNECTION FROM THREE, 33kV OR 11kV LIGHTNING ARRESTERS, AND TRANSFORMER TANK.

b. TO EACH OF THE REMAINING TWO EARTH POINTS
(i) ONE SEPARATE CONNECTION FROM THE NEUTRAL OF THE LOW VOLTAGE SIDE OF THE TRANSFORMER.
(ii) ONE SEPARATE CONNECTION FROM THE TRANSFORMER AND THE HANDLE OF 33kV/11kV AB SWITCH.
(iii) ONE SEPARATE CONNECTION FROM THE EARTH TERMINAL OF THE POLES.

2. 25 x 6 mm GALVANISED IRON STRAP LEADS.
3. REFER DWG BPC-DCS-019 FOR EARTH POINTS ON TRANSFORMER AND STRUCTURE.

BHUTAN POWER CORPORATION LIMITED

BPC

DESIGNATION	NAME	DATE
DRAFTSPERSON		
DESIGNER		
PROJECT MANAGER		
HEAD OF DEPARTMENT		

ENGINEERING DESIGN & CONTRACTS DEPARTMENT

TITLE : DISTRIBUTION DESIGN & CONSTRUCTION STANDARD

INDICATIVE ARRANGEMENTOF GEE SLAB EARTHING
DISTRIBUTION SUBSTATION

DRAWING NO. BPC-DDCS-2014-51B

REVISION 2014

SECTION VII - CONTRACT FORMS

(Form No. 1 to Form No. 4)

Applicable Forms from this Contract Forms section shall either be submitted by the successful Bidder or by Employer, post award of Contract.

FORM 1: NOTIFICATION OF AWARD

[Insert date]

To: *[name and address of the Contractor]*

Sub: Notification of Award for
Ref: Our NIT No: (*insert number and reference of the NIT*)

Dear Sir or Madam,

With reference to your Bid dated *[insert date]* for execution of the *[insert name of the Contract and identification number, as given in the SCC]* for the Contract Price of the equivalent of *[insert amount in numbers and words] [insert name of currency]*, as corrected and modified in accordance with the Instructions to Bidders is hereby accepted by our Agency.

[Insert one of the following (x) or (y) options if applicable]

(x) We accept that *[insert name proposed by Bidder]* be appointed as the Adjudicator.

(y) We do not accept that *[insert name proposed by Bidder] be* appointed as Arbitrator, and by sending a copy of this Notification of Award to *[insert name of the Appointing Authority] we* are hereby requesting *[insert name]*, the Appointing Authority, to appoint the Arbitrator in accordance with SCC 7.

The Contract in duplicate is attached hereto. Kindly be advised of the following:

a) Please confirm your acceptance of this Notification of Award by signing and dating both copies of it, and returning one copy to us no later than 15 days from the date hereof;

b) Please report to this office to sign the formal Contract Agreement within 15 (fifteen) days of the date of this Notification of Award.

c) Prior to the signing of Contract Agreement, you are required to submit performance security in the form of a Bank Guarantee/demand draft/cash warrant as per ITB clause 42 and GCC clause 17. The performance security may be submitted in advance or at the time of signing the contract agreement. The bank guarantee/demand draft/cash warrant should be in favour of (*insert appropriate name and designation*).

d) The stipulated commencement of the work shall be reckoned from the date of Contract signing.

Kindly acknowledge the receipt of this letter.

Yours sincerely,

[xyz]

FORM 2: CONTRACT AGREEMENT

This agreement is made the *[insert day]* day of *[insert month]*, *[insert year]* between *[insert name and address of Employer]* (hereinafter called "the Employer"), of the one part, and *[insert name and address of Contractor]* (hereinafter called "the Contractor") of the other part.

Whereas the Employer desires that the Contractor execute *[name and identification number of Contract]* (hereinafter called "the Works") and the Employer has accepted the Bid by the Contractor for the execution and completion of such Works and the remedying of any defects therein.

The Employer and the Contractor agree as follows:

a) In this Contract, words and expressions shall have the same meanings as are respectively assigned to them in the contract documents referred to.

b) The following documents shall be deemed to form and be read and construed as part of this Agreement:

i. The Notification of Award
ii. The Bid Submission Form
iii. The addenda Nos. (*insert addenda number if any*)
iv. The General Conditions of Contract
v. The Special Conditions of Contract
vi. The Technical Specifications
vii. The Drawings
viii. The Schedules

c) In consideration of the payments to be made by the Employer to the Contractor as hereinafter mentioned, the Contractor hereby covenants with the Employer to execute and complete the Works and remedy any defects therein in conformity in all respects with the provisions of the Contract.

d) The Employer hereby covenants to pay the Contractor in consideration of the execution and completion of the Works and the remedying of defects therein, the Contract Price or such other sum as may become payable under the provisions of the Contract at the times and in the manner prescribed by the Contract.

e) This Agreement shall prevail over all other Contract documents.

In Witness whereof the parties thereto have caused this Agreement to be executed on the day, month and year indicated above.

Sign & Seal of Contractor _____

Sign & Seal of witness of Contractor: _____

Sign & seal of Employer authorized representative:

_____

Binding signature of Employer's representative's signature:

FORM 3: BANK GUARANTEE FOR CONTRACT PERFORMANCE SECURITY

[To be provided on the relevant legal document, as per applicable law, in the country of execution]

Bank Guarantee No. .....

Date.....
To
[Employer's Address]

Dear Sir/Madam,

In consideration of Employer's name (hereinafter referred to as Employer which expression shall unless repugnant to the context or meaning thereof include its successors, administrators and assigns) having awarded to M/s …… with its Registered/Head Office at ……(hereinafter referred to as the 'Contractor' which expression shall unless repugnant to the context or meaning thereof, include its successors, administrators, executors and assigns), a Contract by issue of Letter of Award No…….. dated ……... valued at .....*[amount of foreign currency in words], [amount in figures], and [amount of local currency in words], [amount in figures]* ....., for ……... *(Insert Scope of Contract)* …… and the Contractor having agreed to provide a Contract Performance Guarantee for the faithful performance of the entire Contract equivalent to ten percent (10%) of the said value of the Contract to Employer.

We ……... *(insert Name and Address of the bank issuing the Guarantee)* ……. having its Head Office at ……... hereinafter referred to as the 'Bank' which expression shall, unless repugnant to the context or meaning thereof include its successors, administrators, executors and assigns), do hereby guarantee and undertake to pay Employer, on demand any and all monies payable by the Contractor to the extent of ……. *[insert amount of the Bank Guarantee and its currency]* ……... at any time up to ……@.....(day/month/year) without any demur, reservation, contest recourse or protest and or without any reference to the Contractor. Any such demand made by Employer on the Bank shall be conclusive and binding notwithstanding any difference between Employer and the Contractor or any dispute pending before any Court, Tribunal or any other Authority. The Bank undertakes not to revoke this guarantee during its currency without prior consent of Employer.

Employer shall have the fullest liberty without affecting in any way the liability of the Bank under this guarantee from time to time to extend the time for performance of the Contract by the Contractor. Employer, shall have the fullest liberty, without affecting this guarantee to postpone from time to time the exercise of any powers vested in Employer or of any right which they might have against the Contractor and to exercise the same at any time and any manner, and either to enforce or to forbear to enforce any covenants, contained or implied in the Contract between Employer and the Contractor or any other course of remedy or security available to Employer. The Bank shall not be released of its obligations under these presents by any exercise by Employer of its liberty with reference to the matters aforesaid or any of them or by reason or any other acts of omission or commission on the part of Employer or any other indulgence shown by Employer or by any other matter or thing whatsoever which under the law would but for these provisions have the effect of relieving the Bank.

The Bank also agrees that Employer at its option shall be entitled to enforce this guarantee against the Bank as a Principal debtor, in the first instance without proceeding against the Contractor and notwithstanding any security or other guarantee that Employer may have in relation to the Contractor's liabilities.

Notwithstanding anything contained herein above, our liability under this guarantee is restricted to …… and shall remain in force up to and including …… and shall be extended from time to time for such period, as may be desired by M/s ……. on whose behalf this guarantee has been given.

All rights of Employer under this guarantee shall be forfeited and the Bank shall be relieved and discharged from all liabilities after the above-mentioned date or from the extended date.

Dated this ……day of …….20 …… at …….

Witness:

……	……
(Signature)	(Signature)
……	……
(Name)	(Name)
……	……
(Official Address)	(Official Address)

Authorized vide

Power of Attorney No…….

Date…….

Note:	(@) This date shall be ninety (90) days beyond the scheduled end of Defect Liability Period of the last equipment covered under the Contract (#) Complete mailing address of the Head Office of the Bank to be given

FORM 4: BANK GUARANTEE FOR ADVANCE PAYMENT

[To be provided on the relevant legal document, as per applicable law, in the country of execution]

Bank Guarantee No. .....

Date.....
To
[Employer's address]

Dear Sir/Madam,

In consideration of the Employeral Corporation Ltd (hereinafter referred to as Employer) which expression shall unless repugnant to the context or meaning thereof include its successors, administrators, executors and assigns having awarded to M/s..... with its registered/Head Office at ..... (Here-in-after referred to as the Contractor) which expression shall unless repugnant to the context or meaning thereof, include its successors, administrators, executors and assigns, a Contract by issue of Employer's Notification of Award No. ……. dated ……. and the same having been unequivocally accepted by the Contractor resulting in a 'Contract', dated …… valued at …….....*[amount of foreign currency in words], [amount in figures], and [amount of local currency in words], [amount in figures]* ……. for …… *(insert Scope of Contract)* ……. (Hereinafter called the Contract) and Employer having agreed to make advance payment to the Contractor for performance of the above Contract amounting to .....*[insert currency and amount of the advance]* ....., as an advance against Bank Guarantee to be furnished by the Contractor.

We, ……. *[Insert name and address of the bank issuing Branch]* ……... having its Head Office at ……... (Hereinafter referred to as the 'Bank' which expression shall, unless repugnant to the context of meaning thereof, include its successors, administrators, executors and assigns) do hereby guarantee and undertake to pay Employer immediately on demand any or all monies payable by the Contractor to the extent of ……. *[insert currency and amount of the advance]*…….at any time up to …….@……... without any demur, reservation, contest, recourse or protest and/or without any reference to the Contractor. Any such demand made by Employer on the Bank shall be conclusive and binding not withstanding any difference between Employer and the Contractor or any dispute pending before any Court, Tribunal, Arbitrator or any other Authority.

Employer shall have the fullest liberty without affecting in any way the liability of the Bank under this guarantee from time to time to vary the advance or to extend the time for performance of the Contract by the Contractor. Employer shall have the fullest liberty, without affecting this guarantee to postpone from time to time the exercise of any powers vested in them or of any right which they might have against the Contractor and to exercise the same at any time in any manner and either to enforce or to forbear to enforce any covenants contained or implied in the Contract between the Employer and the Contractor or any other course or remedy or security available to Employer. The Bank shall not be released of its obligations under these presents by any exercise by Employer of its liberty with reference to the matters aforesaid or any of them or by reason of any other act or forbearance or other acts of omission or commission on the part of Employer or any other indulgence shown by Employer or by any other matter or thing whatsoever which under law would, but for this provision, have the effect of relieving the Bank.

The Bank also agrees that Employer at its option shall be entitled to enforce this Guarantee against the Bank as a principal debtor, in the first instance without proceeding against the Contractor and notwithstanding any security or other guarantee that Employer may have in relation to the Contractor's liabilities.

Notwithstanding anything contained hereinabove our liability under this guarantee is limited to…… *[insert currency and amount of the advance]*…… and it shall remain in force up to and including …… and shall be extended from time to time for such period as may be desired by M/s …… on whose behalf this guarantee has been given.

All rights of Employer under this guarantee shall be forfeited and the Bank shall be relieved and discharged from all liabilities after the above-mentioned date or from the extended date.

Dated this ……day of …….20 …… at …….

Witness:

……	……
(Signature)	(Signature)
……	……
(Name)	(Name)
……	……
(Official Address)	(Official Address)

Attorney as per

Power of Attorney No: …….

Date…….

Note:	(@) This date shall be ninety (90) days beyond the schedule date of Completion of the last Facility covered under the Contract.