dhi

འབྲུག་མི་སེར་རྒྱུ་དངོས་གཞི་བཟུང་ཚན།

DRUK HOLDING & INVESTMENTS LTD.

GROUP STANDARD BIDDING DOCUMENT

WORKS

[For value above BTN 2 million]

BPC

dhi Company

Tender No. BPC/ESD/Tro/Tech-05/2024

Bidding Document for

a. Labour contract Plan and O&M Work
b. Civil Work: Providing and Laying

Package Q15 - 2024
1st March 2024

BHUTAN POWER CORPORATION LTD. TRONGSA BHUTAN BPC

Detailed Notice Inviting Tender

Bhutan Power Corporation Limkited
Distribution Department/Distribution & Customer Services Division/ESD Trongsa
Trongsa: Bhutan
Notice Inviting Tenders (NIT)
(Domestic Competitive Bidding)
For

a. **Labour Contract of Plan and O&M Works – Package Q15 -2024**
b. **Civil Work: Providing and Laying**
Package Q15 - 2024

NIT No. BPC/ESD/Tro/Tech-05/2024 Date. March 01, 2024

a. Electricity Services Division, Trongsa, Distribution & Customer Services Division (DCSD), Bhutan Power Corporation Limited (BPC), Employer invites sealed Bids from eligible Bidders meeting the qualification requirements for the construction of **a.Labour contract of Plan and O&M works and b. Civil Work: Providing and Laying** as per the scope of work mentioned hereinafter.

1.0 The brief scope of work is as under:

1. **Labour Contract of Plan and O&M Work**
2. **Civil Work: Providing and Laying**
Package Q15 - 2024

2.1 O&M Work: Improvement & Upgradation of Lines and Substations

a. Right of Way (RoW) Cutting and Clearing.
b. Dismantle of 6.6kV Copper cable & 2 nos 50kVA transformer of Tangsibji Micro Hydel
c. Improvement of low LV ground clearances and insertion of pole for lengthy service cable.
d. Rectifications of MV poles/ lines at Korphu, Langthel, Drakten, Tangsibji & Nubi jurisdiction.
e. Installation of UG & Distribution Pillar at Dzongkhalum.
f. Construction and Maintenance of 11kV RUM at Villing.

BHUTAN POWER CORPORATION LTD. BPC TRONGSA BHUTAN

2.2 Civil Work

a. Construction and Maintenance of 11kV RUM at Villing.

b. R&M & PCC work at Staff quarters & Office.

c. Chain link fencing ESD, Office.

d. Maintenance of 500kVA Substation at Dzongkolumpa.

e. 250kVA substation near Dasho Dzongrab Resident..

f. DP/4P pole base casting at DHI Project Samtsholing

2.3 Plan Work: Distribution Lines and Substations

a. RE fillin in and around Trongsa Dzongkhag.
b. Upgradation of 33kV line, LV ABC and substation to 3phase at Banglapokto
c. Construction of 33kV line, 33/0.415kV, 25kVA substation and LV ABC at Kela Lingar.
d. Relocation of Hospital substation (Construction of 11kV line, 33/0.415kV, 250kVA substation and LV ABC.
e. Rerouting/shifting of 33kV Line which passes through dense forest to nearby road (Construction of 33kV line at Semji).
f. Up-gradation of Lines and substation at Thagnil and upgrade existing 33/0.240kV, 10kVA to 33/0.415kV, 63kVA substation.
g. Up-gradation of LV Lines and subsations at Threspang and upgrade existing 33/0.240 kV, 10 kVA to 33/0.415kV, 63 kVA substation
h. Relocation of Chakarzur substation (Construction of 33kV line, 63kVA substation and LV ABC).
i. Relocation of Kuengarabten substation (Construction of 33kV line, 125kVA substation and LV ABC).
j. Up-gradation of 50sqmm. LV ABC to 95sqmm. LV ABC at Trongsa Town.
k. Replacement of 250kVA by 125kVA near Taktse Central School (Construction of 125kVA substation).
l. Replacing of 33kV Rabbit conductor with AAAC at 400kV line crossing at Rewatala. (0.250 Km).
m. Installation of 33kV LBS and 11kV LBS (In and around Trongsa Dzonghag).
n. Conversion of 33kV line to 11kV line from willing to Yangkil Resort via Druk Willing resort (0.140km) and conversion of 2 no of 33/0.415kV transformer to 11/0.415kV, 250kVA and 500kVA at Yangkil and Willing respectively.

2.0 Detailed specifications, scope of Work and terms and conditions are given in the Bidding Documents, which are available at the address given below as per the following schedule:

BHUTAN POWER CORPORATION LTD. BPC TRONGSA BHUTAN

NIT No and name of the package	:	NIT No. BPC/ESD/Tro/Tech-05/2024 dated March 01, 2024: a. Labour contract of Plan and O&M works b.Civil Work -Providing and Laying Package Q15-2024
Estimated Cost of Works	:	Package A: BOQ I= 4.089 millon Package A: BOQ II= 3.569 millom
Bidding Documents shall be available from	:	From March 01, 2024 to March 15, 2024 From 09:00 Hrs to 17:00 Hrs
Bid receipt date & time	:	Up to March 18, 2024 by 10:30 Hrs
Bid opening date & time	:	On March 18, 2024 at 11:00 Hrs at ESD Trongsa Conference hall
Bidding Documents shall be available at	:	Sr. Divisional Manager, ESD, Trongsa, BPC www.bpc.bt

3.0 Interested Bidders may obtain the bidding documents from Employer /relevant website.

4.0 Bidders downloading the documents from the website should register themselves by intimating the nodal officer of Employer, before the deadline for submission of Bid, its intention to submit the Bid on the basis of downloaded documents.

5.0 Issuance of bidding documents shall not automatically construe that the Bidder fulfils the Qualifying Requirements, which shall be determined during Bid evaluation based on data/documents submitted by the Bidder. Bids shall be submitted at the address given below and shall be opened in the presence of Bidder's representatives who choose to attend.

6.0 All Bids must be accompanied by Bid security for an amount of BTN **82000.00** (Ngultrum Eighty two thousand) only for **Package A: BOQ I O&M and Civil Works and** BTN **71,400.00** (Ngultrum Seventy one thousand four hundred) only for **Package A: BOQ II Plan Work**, only in the form of Bank Guarantee/ Demand Draft /Cash Warrant, issued/enforceable by any financial institutions in Bhutan, and valid till **17th June 2024.** Bids not accompanied with an acceptable Bid security shall be rejected by Employer and in such cases, Bids shall be returned to the Bidders unopened.

7.0 Qualification Requirement for Bidders shall be as specified in the Bidding Data Sheet (BDS).

8.0 Bidding Documents are not transferrable.

9.0 Employer reserves the right to accept or reject any Bid partly or fully or cancel the bidding process without assigning any reasons thereof and in such case no Bidder shall have any claim arising out of such action of Employer.

10.0 The Bidders shall be required to complete the Works within the time for completion as specified in the SCC.

BHUTAN PC MINI CORPORATION LTD. BPC TRONGSA BHUTAN

11.0 Address for Communication (Bid Submission):

Ugyen Thinley, Sr. Divisional Manager,
Electricity Services Division, Trongsa,
Distribution & Customer Services Division,
Distribution Department,
Bhutan Power Corporation Limited.
Phone: (975)-03-521102.
Mobile No: (975)-17643271/77643271
esdtrongsa@bpc.bt./uthinley@bpc.bt

SECTION I – INSTRUCTIONS TO BIDDERS

BHUTAN POWER CORPORATION LTD.
BPC
TRONGSA BHUTAN

SECTION I – INSTRUCTIONS TO BIDDERS

A. Introduction

1. Definitions and Interpretations

1.1. Unless otherwise stated, throughout this Bidding Document definitions and interpretations shall be as prescribed in the General Conditions of Contract.

2. Scope of Works

2.1. The scope of Works shall be as specified in Section VI, Technical Specifications or BDS. The name and identification number of the Contract is provided in the NIT.

3. Fraud and Corruption

3.1. As per the RGoB policy, Employer requires that the Bidders, Contractors and their Subcontractors shall observe the highest standards of ethics during the bidding process and execution of Contracts. The terms "Corrupt practice", "Fraudulent practice", "Collusive practice", "Coercive practice" and "Obstructive practice" shall be as per definition in GCC 1.6. In pursuance of this policy, the Employer:

a) will reject a Bid for award if it determines that the Bidder recommended for award has, directly or through an agent, engaged in corrupt, fraudulent, collusive, coercive or obstructive practices in competing for the Contract in question;

b) will sanction a firm or individual, including declaring them ineligible, either indefinitely or for a stated period of time, to be awarded a contract if it at any time determines that they have, directly or through an agent, engaged in corrupt, fraudulent, collusive, coercive or obstructive practices in competing for, or in executing contract;

c) will have the right to require that a provision be included in Bidding Documents and in contracts, requiring Bidders, Suppliers, Contractors and their Subcontractors to permit the Employer, any organization or person appointed by the Employer and/or any relevant RGoB agency to inspect their accounts and records and other documents relating to the Bid submission and contract performance and to have them audited by auditors appointed by the Employer;

d) requires that Bidders, as a condition of admission to eligibility, execute and attach to their bids an Integrity Pact Statement in the form provided in Section III, Bidding Forms. Failure to provide a duly executed Integrity Pact Statement may result in disqualification of the Bid; and

BHUTAN PC CORPORATION LTD. BPC TRONGSA BHUTAN

e) will report any case of corrupt, fraudulent, collusive, coercive or obstructive practice to the relevant RGoB agencies, including but not limited to the Anti-Corruption Commission (ACC) of Bhutan, for necessary action in accordance with the statutes and provisions of the relevant Agency.

3.2. Furthermore, the Bidders shall be aware of the provisions stated in GCC 1.6.

4. Eligible Bidders

4.1. A Bidder shall be an eligible individual, firm, incorporated legal entity or a Joint Venture of such entities under an existing agreement. A Bidder, and all parties constituting the Bidder, shall have the nationality of any country, subject to the restrictions specified in ITB. 4. A Bidder shall be deemed to have the nationality of a country if the Bidder is constituted, incorporated, or registered and operates in conformity with the provisions of the laws of that country. This criterion shall also apply to the determination of the nationality of the proposed subcontractors for any part of the Contract.

4.2. A Bidder shall not have conflict of interest. Any Bidder, found to have a conflict of interest, shall be disqualified. Bidders may be considered to have a conflict of interest with one or more parties in the same bidding process if they:

a) or any of their affiliates are associated, or have been associated in the past, to provide consulting services for the preparation of the design, specifications and/or other documents to be used for the procurement of the Works to be executed pursuant to these Bidding Documents, or in any other way provided the consulting services in any aspect of the preparatory stages leading up to the issue of these bidding documents or hired/ proposed to be hired by Employer as Project Manager for the Contract implementation;

b) submit more than one Bid in this bidding process either individually or as a partner in the Joint Venture, except for alternative offers permitted under ITB. 15. Participation by a Bidder in more than one Bid shall result in rejection of all Bids in which the Bidder has participated. However, this does not limit the participation of a Bidder as a Subcontractor in another Bid or more than one Bid;

c) employ or otherwise engage, either directly or through any of their Affiliates, a Employer employee, spouse or any of the dependent parent of a Employer employee;

d) have a relationship with each other, directly or through common third parties, that puts them in a position to have access to information about or influence on the Bid of another Bidder, or influence the decisions of Employer regarding this bidding process; or

e) have the same legal authorized representative for purposes of this Bid.

4.3. An Employer formed by the merger of two or more companies or divisions of such companies engaged in execution of Works as specified in the Bidding Documents can also participate provided the constituent companies or divisions before merger individually or jointly meet the stipulated qualification requirements fully.

4.4. If so, specified in the BDS, if a foreign/expatriate Bidder, who is currently not doing business within the Kingdom of Bhutan, is awarded the contract, the Bidder may be represented by an agent in the Kingdom of Bhutan. The agent shall be a legal entity, equipped and able to carry out the Contractor's obligations.

4.5. Where an agent is permitted to submit the Bid on behalf of the Foreign Bidder, payment of agency commission, if any, to the Foreign Bidder shall only be made in the local currency. The agent and the Foreign Bidder shall not be permitted to submit separate bids in the same bidding process. On the other hand, an agent shall not be allowed to work with and represent more than one party/Bidder.

4.6. In case of JVs with any of the Bhutanese Bidder the payment to the Bhutanese member of the JV for the services from within Bhutan shall be in local currency.

4.7. The Bidder shall provide such evidence of their continued eligibility satisfactory to the Employer, as the Employer shall reasonably request.

5. Exclusion of Bidders

5.1. A Bidder shall be ineligible for participating in this bidding process under the following circumstances:

a) The Bidders is insolvent or is in receivership or is a bankrupt or is in the process of being wound up; or has entered into an arrangement with the creditors; or

b) The Bidders' affairs are being administered by a court, judicial officer or appointed liquidator; or

c) The Bidder has suspended business or is in any analogous situation arising from similar procedures under the laws and regulations of his country of establishment; or

d) The Bidder has been found guilty of professional misconduct by any competent authority as per law or any professional body; or

BHUTAN POWER CORPORATION LTD. BPC

e) The Bidder has not fulfilled his obligations with regard to the payment of taxes, social security or other payments due in accordance with the laws of the country in which he is established or of the Kingdom of Bhutan; or

f) The Bidder has been declared by Employer or the Anti-Corruption Commission to be ineligible for participation in tenders on account of any fraud and/or corruption in competing or executing a Contract; or

g) The Bidder has been debarred/blacklisted from participation in public procurement by any competent authority as per law; or

h) As a matter of law or official regulation, the Royal Government of Bhutan (RGoB) prohibits commercial relations with the country of the Bidder. Such exception shall be specified in the BDS.

6. Joint Venture Bids

6.1. Bids submitted by a joint venture, if so, permitted in the BDS, formed by a number of legal entities as specified in the BDS subject to the condition that the total number of legal entities shall not exceed three (3) entities, shall comply with the following requirements:

a) The Bid shall be signed by an authorized signatory of the joint venture, who has been authorized by all the other members, so that the bid is legally binding on all members;

b) One of the partners shall be designated as leader who shall have the authority to conduct all business for and behalf of any and all members of the joint venture. This authorization shall be evidenced by submitting with the bid a power of attorney signed by legally authorized signatories of the other members;

c) The leader shall be authorized to receive instructions for and on behalf of any and all members of the Joint Venture and the entire execution of the contract, including payment, shall be done exclusively with the leader;

d) All members of the joint venture shall be liable jointly and severally for the execution of the contract in accordance with its terms; and

e) A copy of the agreement entered into by the joint venture members as per the format provided in the bidding documents shall be submitted with the Bid. In order for JV to qualify, either the lead partner must meet the minimum technical qualification requirements or can be met jointly by the JV partners, as specified in the BDS.

6.2. The financial qualification requirements however may be met jointly by the members of the JV subject to the condition that each member can independently meet at least the minimum financial qualification requirements as specified in the BDS. Failure to comply with this requirement will result in rejection of the Joint Venture's Bid.

6.3. A firm can be a member in only one joint venture; bids submitted by joint ventures including the same firm as member in more than one JV in the same bidding process shall be rejected.

7. Responsibility of Bidders

7.1. Employer shall not assume any responsibility regarding information gathered, interpretations or conclusions made by the Bidder or regarding information, interpretations or deductions the Bidder may derive from the data or any report furnished by Employer. Verbal communication or conversation with any employee of Employer either before or after the submission of Bid shall not affect or modify any of the terms or obligations contained herein.

7.2. It shall be the sole responsibility of Bidders to determine and to satisfy themselves by such means as they consider necessary or desirable as to all matters pertaining to this bidding process including in particular all factors that may affect the performance of the Contract in the event of award.

B. The Bidding Documents

8. Contents of Bidding Documents

8.1. Thebidding documents includes the sections stated below together with any addendum/amendment to be issued in accordance with ITB. 12.

Section I Instruction to Bidders (ITB)

Section II Bid Data Sheet (BDS)

Section III Bidding Forms

Section IV General Condition of Contract

Section V Special Conditions of Contract

Section VI Technical Specifications

Section VII Contract Forms

BHUTAN POWER CORPORATION LTD. BPC PHUNTSHOLING BHUTAN

8.2. The Bidder is expected to examine all instructions, forms, terms, conditions, specifications and other information in the bidding documents and shall be deemed to have carefully examined the bidding documents and also to have satisfied himself as to the nature, character and scope of work to be executed. Failure to furnish all information and documents required as per the Bidding Documents or submission of a Bid not substantially responsive to the Bidding Documents in every respect shall be at the Bidder's risk and may result in rejection of his bid.

9. Clarifications on Bidding Documents

9.1. The Bidder shall examine the bidding documents thoroughly in all respects and if any conflict, discrepancy, error or omission is observed, the Bidder may request clarification promptly. A prospective Bidder requiring any clarification on the bidding documents may notify Employer in writing by post or e-mail, to the address mentioned in BDS, not later than the date and time specified in BDS.

9.2. Employer shall issue clarification(s) as it may think fit in writing by post or e-mail prior to the deadline/ extended deadline for submission of Bids prescribed by Employer. All such clarifications shall form part of the bidding documents and shall accompany the Bidder's bid.

9.3. For the information of all Bidders, the clarifications shall also be uploaded on the Employer's and/or relevant website. The Bidders are advised to visit the website of the Employer from time to time in their own interest.

9.4. Bidders shall not be allowed to seek any clarification on the bidding documents in person or by telephone or other verbal means. Any queries sent by the Bidders after the date and time notified in the BDS or extended date, if any, shall not be entertained.

9.5. Should Employer deem it necessary to amend the bidding documents as a result of a clarification, it shall do so following the procedure under ITB. 12.

9.6. Any failure on the part of the Bidder to comply with the provisions under ITB 9 shall not excuse him/her for performing the works in accordance with the contract, in case of award.

10. Site Visit and Familiarization

10.1. The Bidder is advised to visit and examine the site and its surroundings where the Works are to be executed and obtain for itself on its own responsibility and risk, all information that may be necessary for preparing the Bid and entering into a Contract for execution of the Works. The costs of visiting the site shall be fully borne by the Bidder. Employer shall facilitate the site visit and Bidder is required to furnish advance intimation of his site visit.

10.2. The Bidder shall acquaint himself with the adequacy of local conditions and requirements including the approach roads to the site, adequacy of existing culverts, bridges and roads for the expected traffic, water and power supply, nature of ground and sub-soil conditions, water table level, river regime, river water levels and other details, geological and climatic conditions, local terrain, availability of labour and construction material, communication facilities, utility and labour conditions and shall not claim at any time after submission of the Bid or during the execution of the Contract that there was any lack of understanding with regard to the conditions imposed in the Contract or prevailing at the site.

10.3. In their own interest, the Bidders are required to familiarize themselves with the Income Tax Act, prevailing labour laws including laws and regulations governing engagement of labour for employment and deployment at site & other related acts and laws prevalent in the Kingdom of Bhutan. Further, the Bidders are required to comply with these acts/laws and other relevant provisions particularly with reference to the execution of the works.

10.4. Foreign Bidders shall familiarize themselves especially with the rules and regulation applicable to the foreign firms for carrying out business in the Kingdom of Bhutan.

11. Pre-Bid Meeting

11.1. A pre-bid meeting shall be conducted only if necessary to clarify doubts and concerns of the Bidders prior to submission of bids. The Bidders who have downloaded the bidding documents from the Employer's /relevant website shall attend pre-bid meeting to be held on the date, time and location specified in BDS.

11.2. Non-attendance at the pre-bid meeting shall not be a cause for disqualification of Bidders but at the same time shall not entitle them to raise any query at a later date.

11.3. Minutes of the pre-bid meeting, including the text of the questions raised without identifying the source, and the responses given together with any responses prepared after the meeting, shall be circulated to all Bidders who have downloaded the bidding documents.

11.4. Any modification to the bidding documents that may become necessary as a result of the pre bid meeting shall be made by Employer through the issue of an addendum pursuant to ITB. 12.

12. Amendment of Bidding Documents

12.1. At any time prior to the deadline for submission of Bids, Employer may amend the bidding documents by issuing an addendum/ corrigendum. This may be done either on Employer's own initiative or in response to clarification requests from any prospective Bidder.

12.2. The addendum/corrigendum shall be sent in writing either by post/ e-mail to all prospective Bidders. For the information of other Bidders, the addendum/amendments/corrigendum shall also be uploaded on the Employer/relevant website.

12.3. Employer shall assume that the information contained therein have been taken into account by the Bidder in its Bid and shall bear no responsibility or liability arising out of non-receipt of the same in time or otherwise by the Bidder.

12.4. Employer may, at its discretion, extend the deadline for submission of Bids pursuant to ITB. 25.2 to allow prospective Bidders reasonable time to take the addendum into account in preparation of their Bids. It would be in the interest of the Bidders to regularly visit the Employer website for information on any amendment or clarification to the bidding documents. Employer shall in no way be responsible for any ignorance of the Bidder about the amendment to the bidding documents.

C. Preparation and Submission of Bids

13. Cost of Bidding

13.1. The Bidder shall bear all costs, direct or indirect associated with the preparation and submission of his bid (including site visits and attending pre-bid meetings) and Employer in no case shall be responsible or liable for these costs, regardless of the conduct or outcome of the bidding process.

14. Language of Bid

14.1. The Bid, and all correspondence and documents related to the Bid shall be in English. Supporting documents and printed literature provided by the Bidder related to the Bid shall also be in English and if in any other language, should be translated to English. The English translation shall prevail on the interpretation.

15. Alternative Bids

15.1. Alternative bids shall not be considered, unless specifically allowed in the BDS. If so allowed, ITB. 15.1 and ITB. 15.2 shall govern, and the BDS shall specify which of the following options shall be allowed:

a) Option One: A Bidder may submit alternative bids with his base bid and Employer shall only consider the alternative bids offered by the Bidder whose bid for the base case was determined to be the lowest-evaluated bid, or

b) Option Two: A Bidder may submit an alternative bid with or without a bid for the base case. All bids received for the base case, as well as alternative bids meeting

the Technical Specifications pursuant to Section VI, shall be evaluated on their own merits.

15.2. Alternative bids shall provide all information necessary for a complete evaluation of the alternative by Employer, including design calculations, technical specifications, breakdown of prices, proposed construction methods and other relevant details.

16. Documents Constituting the Bid

16.1. The Bid shall comprise the following documents:

a) Bid submission forms and Bill of Quantities;

b) Bid Security in accordance with ITB. 22;

c) Integrity Pact Statement duly executed by the bidder, as per Form: 2 of Section III;

d) Relevant bidding forms;

e) Power of Attorney;

f) Documentary evidences establishing Bidder's Qualification stipulated in BDS;

g) Deviations sheet in accordance with bidding Form: 5 of Section III. No deviation, whatsoever, shall be permitted by Employer, to the provisions of the Bidding Documents listed in the BDS;

h) Alternative Bids if permitted in the BDS; or

i) Any other documents required in the BDS.

17. Bid Submission Forms

17.1. The Bidder shall submit the bid using the Bid Submission Form prescribed under Form: 6 of Section III. This form must be completed without any alterations to its text, and no substitutes shall be accepted. All blank spaces shall be filled in with the information requested.

17.2. A bid in which the Bid Submission Form is not duly filled, signed and/or sealed by the bidder shall be rejected.

18. Bid Prices and Discounts

18.1. The Bidder shall fill in unit rates/ prices for all items of the Works described in the BoQ in figures. The unit rates/ prices quoted in the BoQ shall also be deemed to include any incidentals not shown or specified but reasonably implied or necessary for the proper completion and functioning of the whole specified item of the Works in accordance with the Bidding Documents and shall also deem to include the cost of construction of infrastructural facilities required for execution of the Contract and not included in the Works. The Contract shall be for the whole Works based on the unit rates and prices in the Priced BoQ submitted by the Bidder.

18.2. The unit rates/ prices quoted in the BoQ shall be inclusive of all taxes, duties, levies & charges payable in the Kingdom of Bhutan (including those levied on the construction material quarried from land owned by Employer or otherwise), as of thirty (30 days) days prior to the deadline for submission of Bids.

18.3. The total price at the bottom of the Priced BoQ shall be indicated both in figures and words.

18.4. If rebate/discount is offered, the overall discount in percentage shall be brought out in the Priced BoQ. Conditional rebates/discount, if any, offered by any Bidder shall not be considered during Bid evaluation.

18.5. The prices and discounts quoted by the Bidder in the Bid Submission Form and in the Priced BoQ shall conform to the requirements specified below:

a) Items for which no rate or price is entered by the Bidder in the Priced BoQ shall not be paid by Employer when executed and shall be deemed covered by the other rates and prices mentioned in the Priced BoQ.

BHUTAN ENERGY CORPORATION LTD. BPC TRONGSA BHUTAN

19. Contract Price Adjustment

19.1. Prices quoted by the Bidder shall be fixed during the Bidder's performance of the Contract or subject to variation, as specified in the BDS. A Bid submitted with an adjustable price quotation shall be treated as non-responsive and shall be rejected pursuant to ITB. 31 unless adjustable price quotations are permitted.

19.2. If, in accordance with the BDS, prices quoted by the Bidder are subject to adjustment during the performance of the Contract:

a) The prices quoted by the Bidder shall reflect changes in the cost of labour, material, etc. in accordance with the procedures specified in GCC.12.1

b) A Bid submitted with a fixed price quotation when Bids have been invited with price variation, will not be rejected, but the price adjustment will be treated as zero.

c) The estimated effect of the price adjustment provision applied over the period of execution of the Contract shall not be taken into consideration in Bid evaluation.

d) Employer shall indicate the name, source and origin of indices along with their base values and corresponding coefficients as per SCC.

20. Currencies of Bid

20.1. The unit rates and prices shall be quoted by the Bidder in any of the currency (ies) specified in the BDS.

20.2. The reference exchange rate (selling rate) prevailing on the day of Bid opening or the immediate preceding date as posted by the Royal Monetary Authority of the Kingdom of Bhutan shall be used for the conversion of prices.

20.3. The payment to the Contractor shall be made in the currency of Bid and any banking charges related to payment shall be borne by the Contractor.

21. Period of Validity of Bids

21.1. Bids shall remain valid till the date specified in the BDS. A Bid valid for a shorter period shall be liable for rejection by Employer as non-responsive.

21.2. In *exceptional* circumstances, prior to the expiry of the Bid validity period, Employer may request Bidders to extend the period of validity of their Bids. The request and the responses shall be made in writing to all the participating Bidders. A Bidder may refuse the request to extend the validity of its Bid without forfeiting its Bid Security. In such a case, the Bid of the Bidder, refusing to extend the validity of its Bid, shall not be considered for evaluation and award. A Bidder granting the request shall be required to extend the validity of their Bid securities correspondingly but shall not be required or permitted to modify its Bid.

21.3. The provisions of ITB 22 regarding discharge and forfeiture of Bid Security shall continue to apply during the extended period of Bid validity.

22. Bid Security

22.1. The Bidder shall furnish, as part of its Bid, a Bid Security in original form, denominated in the currency and the amount specified in the BDS.

22.2. The Bid Security shall at the Bidder's option, be in any forms stipulated in the BDS:

a) An unconditional and irrevocable Bank Guarantee as per the form; or
b) A Banker's Cheque/ Cash Warrant; or
c) A Demand Draft; or
d) Cash deposit in the Employer's bank account, only in case of exceptional circumstances.

BHUTAN POWER CORPORATION LTD. BPC TRONGSA BHUTAN

22.3. Bid Security shall be issued by a reputable financial institution enforceable in any Banks in Bhutan;

22.4. Bid security shall be in its original form and copies shall not be accepted. Bid Security shall be valid for a period of thirty (30) days beyond the bid validity period, as extended, if applicable, in accordance with ITB. 21.2. Accordingly, the Bid security shall remain valid till the date specified in the BDS;

22.5. Any Bid not accompanied by adequate Bid Security shall be rejected by Employer as non-responsive.

22.6. Return of Bid Security:

a) The Bid Securities of unsuccessful Bidders shall be returned as promptly as possible upon the successful Bidder furnishing the Performance Security pursuant to ITB. 40 and signing the Contract.

b) In case of single stage – two-envelope and two stage mode of tendering, Bid Security of non-responsive Bidders shall be returned immediately after technical evaluation.

22.7. The Bid Security shall be forfeited:

a) if a Bidder withdraws its Bid as a whole or in part during the Bid validity period; or

b) if the Bidder has been found practicing corrupt or fraudulent or collusive or coercive practices during bidding process; or

c) If the successful Bidder fails to:

i.
ii. accept the correction of its Bid Price pursuant to ITB. 32;
iii.
iv. sign the Contract in accordance with ITB 41; or
v.
vi. furnish a Performance Security in accordance with ITB 40.

22.8. The Bid Security of a JV/C must be in the name of JV/C that submits the Bid.

23. Signing of Bids

23.1. The Bidder shall prepare ONE Original of the documents comprising the Bid as described in ITB Clause 18 and clearly mark it "ORIGINAL". In addition, the Bidder shall submit copies of the Bid, in the number specified in the BDS and clearly mark them "COPY". In the event of any discrepancy between the original and the copies, the original shall prevail.

23.2. The original and all copies shall be typed or written in indelible ink and shall be signed by a person/persons duly authorized by the Bidder with official seal as per Form: 4 of Section III. However, any published document submitted along with the Bid shall be signed by the authorized signatory (ies) at least on the first page and last page of such document.

23.3. Any interlineations, erasures, overwriting, cutting or alteration shall only be valid if they are initialed by the authorized signatory (ies) to the Bid.

24. Submission of Bids

24.1. Each Bidder, including its affiliate, shall be permitted to submit only one Bid against a particular NIT. In case a Bidder and its affiliate have submitted separate Bids against the same NIT, such bids shall be rejected.

24.2. Bids shall be delivered by hand, courier or registered post or electronic means so as to reach Employer at the address specified in BDS on or before the date and time mentioned in BDS. Employer shall not be responsible for any delay in receipt of the bid where sent by post or courier.

24.3. In case of hand delivery, Bids shall be handed over to the Nodal officer at the address as specified in BDS.

24.4. The Bids shall be submitted in envelopes, signed and sealed in the manner stipulated hereunder or as mentioned in the BDS. The outer Envelope shall:

a) be marked "CONFIDENTIAL";
b) be addressed to the Employer provided in the BDS;
c) bear the Tender name and number; and
d) provide a warning not to open before the time and date for Bid Opening.

24.5. Single-Stage Two Envelope Process:

a) The inner Envelope- I shall contain:

i. Technical bids and be signed across their seals by the person authorized to sign the Bid on behalf of the Bidder; and

ii. Be marked "ORIGINAL", "ALTERNATIVE" (if permitted) and "COPY"

b) The inner envelope –II shall contain:

i. Financial bids and be signed across their seals by the person authorized to sign Bid on behalf of the Bidder; and

ii. Be marked "ORIGINAL", "ALTERNATIVE" (if permitted) and "COPY".

24.6. Where bids are invited under the single stage single envelope, both technical and financial bid shall be in one envelope.

24.7. In addition to the identification required in ITB. 24.4, the inner envelopes shall indicate the name and address of the bidder, to enable the bid to be returned unopened in case it is declared late pursuant to ITB. 26.

24.8. If the outer envelope is not sealed and marked as above, the Employer shall assume no responsibility for the misplacement or premature opening of the bid.

24.9. In the two-stage process, bidders shall be advised to submit only the technical bids in the first stage. In the second stage, bidders shall be requested to submit both their technical bids as modified and agreed with the Employer and the financial bids based on the modified technical bids simultaneously in two separate sealed envelopes.

24.10. When so specified in the BDS, Bidders shall have the option of submitting their Bids electronically. Bidders submitting Bids electronically shall follow the procedures specified in the BDS.

25. Deadline for Submission of Bids

25.1. Bids must be received by Employer in accordance with ITB. 24. In the event of the specified date for submission of Bids being declared a holiday for Employer, the Bids shall be received up to the specified time on the next working day. Such postponement of date shall not have any impact on the other dates specified in the Bidding Documents (i.e., bid validity and validity of bid security).

25.2. Employer may, at its discretion, extend the deadline for the submission of Bids/ opening of Bids by issuing an addendum and hosting the same on the website, in which case all rights and obligations of Employer and the Bidders previously subject to the original deadline shall thereafter be subject to the deadline as extended.

25.3. In the event of the deadline for submission of Bid extended by Employer, the Bidders who have already submitted their Bids within the original deadline of submission shall have the option to submit their revised Bid in substitution either in full or in part of earlier Bid. In the absence of a revised Bid, the original Bid shall be considered for opening and subsequent evaluation if otherwise in order. Wherever, the Bidder has submitted the revised Bid in modification of earlier Bid, the earlier Bid shall be returned unopened to the Bidder.

26. Late Bids

26.1. Any Bid received by Employer after the bid submission deadline shall be declared late, rejected and returned unopened to the Bidder.

27. Withdrawal, Substitution or Modification of Bids

27.1. A Bidder may withdraw, substitute or modify its Bid after it has been submitted by sending a written withdrawal/ substitution/ modification notice prior to the deadline for submission of Bids, duly signed by an authorized representative, including a copy of the authorization, Power of Attorney as per Form: 4 of Section III. The bid requested to be withdrawn shall be returned unopened to the Bidder.

27.2. The substitution or modification of the Bid must accompany the respective written notice and must be:

a) Submitted in accordance with ITB. 26 and, in addition, the respective cover envelopes shall be clearly marked "SUBSTITUTION" or "MODIFICATION;" and

b) Received by Employer prior to the deadline prescribed for submission of Bids, in accordance with ITB. 24.

BHUTAN POWER CORPORATION LTD. BPC TRONGSA BHUTAN

27.3. No Bid may be withdrawn, substituted or modified in the interval between the deadline for submission of Bids and the expiry of the period of bid validity specified in the BDS or any extension there of pursuant to 21.2.

27.4. Withdrawal, substitution or modification of a Bid between the deadline for submission of Bids and expiry of the period of bid validity (or any extension thereto) shall result in the forfeiture of the bid security pursuant to ITB.24.5.

27.5. If the lowest evaluated Bidder withdraws his Bid between the periods specified pursuant to ITB.29.4, the bid security of the Bidder shall be forfeited.

D. Bid Opening, Evaluation and Comparison

28. Bid Opening

28.1. Employer shall conduct the bid opening at the address, date and time specified in the BDS. Any specific electronic bid opening procedures required if electronic bidding is permitted shall be as specified in the BDS.

28.2. Bidders or their authorized representatives (not more than two) shall be allowed to attend the bid opening. Bidders who chose to attend shall sign the attendance sheet provided in the record of Bid opening with their name, designation, firm name and phone number or any other particulars as may be required. Bidders who chose to attend the opening shall not be allowed to speak on matters related to the Bid until and unless required by the committee members or by seeking permission from the Chairperson by raising hand. Bidders who have any complaint with regard to the Bid opening shall write in the complaint sheet and duly sign the sheet.

28.3. The written withdrawal notices duly signed by an authorized representative of the Bidder for withdrawal of Bids, if any, shall be opened first and read out and such Bids shall be returned to the Bidder unopened.

28.4. The written substitution/ modification notices duly signed by an authorized representative of the Bidder in accordance with ITB. 27.1 shall be opened and read out and the corresponding cover envelopes, which are marked "SUBSTITUTION"/ "MODIFICATION" shall be opened and exchanged with the corresponding Bids being substituted/modified. The substituted/modified bids shall not be opened, but returned to the Bidder.

28.5. Cover envelopes of all other Bids shall be opened one at a time. Bids not accompanied by requisite Bid Security, or other documents and information as detailed in ITB. 16 shall be rejected and returned to the Bidder.

28.6. The Bidders' representatives who are present shall be requested to sign the record. The omission of a Bidder's representatives' signature on the record shall not invalidate the contents and effect of the record.

28.7. In the case of Single Stage Two Envelope Bids, the technical bid shall be opened on the bid opening date. The date for opening the Financial Bid shall be intimated to the Bidders whose Bid is found responsive in the techno-commercial evaluation.

29. Confidentiality

29.1. Information relating to the examination, evaluation, comparison of Bids, andrecommendation of Contract Award, shall not be disclosed to Bidders or any otherpersons not officially concerned with such process until publication of the Contract Award.

29.2. Any effort by a Bidder to influence the Employer in the examination, evaluation, comparison and post qualification of the Bids or Contract Award decisions may result in the rejection of its Bid.

29.3. Notwithstanding ITB 29, from the time of Bid Opening to the time of Contract Award, if any Bidder wishes to contact the Employer on any matter related to the bidding process, it should do so in writing.

30. Clarification of Bids

30.1. To assist in the examination, evaluation, comparison and post-qualification of the Bids, Employer may, at its discretion, ask any Bidder for a clarification on its Bid including justification and breakup of the rates and prices quoted. Any clarification submitted by a Bidder that is not in response to a request by Employer shall not be considered. Employer's request for clarification and the response there to shall be in writing and shall be delivered by email/post/hand delivery.

30.2. No change in the prices or substance of the Bid shall be sought, offered or permitted, except to confirm the correction of arithmetic errors discovered by Employer in the evaluation of the Bids, in accordance with ITB. 32.

31. Preliminary examinations of Bids and determination of responsiveness

31.1. The Employer shall examine the Bids to confirm that all documents and information requested in ITB 16 have been provided, and to determine the completeness of each document submitted.

31.2. Prior to the detailed evaluation of bids, the Employer shall determine whether each bid (a) meets the eligibility criteria defined in ITB 4; (b) has been properly signed; (c) is accompanied by the Bid Security; and (d) is substantially responsive to the requirements of the bidding documents.

BHUTAN PEACE CONSTRUCTION LTD. BPC TRONGSA BHUTAN

31.3. A substantially responsive bid is one which conforms to all the terms, conditions and specifications of the bidding documents, without material deviation or reservation. A material deviation or reservation is one (a) which affects in any substantial way the scope, quality or performance of the Works; (b) which limits in any substantial way, inconsistent with the Bidding Documents, the Employer's rights or the Bidder's obligations under the Contract; or (c) whose rectification would affect unfairly the competitive position of other Bidders presenting substantially responsive Bids.

31.4. If a Bid is not substantially responsive, it will be rejected by the Employer, and may not subsequently be made responsive by correction or withdrawal of the nonconforming deviation or reservation.

32. Correction of Arithmetical Errors in Price Bid

32.1. Arithmetical errors shall be corrected at the time of evaluation of Price Bid and the corrected figure shall be considered for the purpose of evaluated bid price. The corrections in the bid price shall be done as per the provisions of this clause and shall be binding on the Bidder. If the Bidder does not accept the correction of errors as per the provisions of this clause, the bid shall be rejected and the bid security shall be forfeited.

32.2. If there is a discrepancy between the product of unit price & quantity and the total price for such item, the product of unit price and quantity shall prevail and the total price shall be corrected unless in the opinion of Employer, there is an obviously gross misplacement of decimal point in the unit rate, in which case, the total of line item as quoted shall prevail and unit rate shall be corrected accordingly.

32.3. If there is discrepancy between summation of subtotals and total price, the summation of subtotal price shall prevail, and the total price shall be corrected.

32.4. If there is a discrepancy between words and figure, wherever the bid document requires the figures to be written in words and figures, the amount in words shall prevail unless the amount expressed in word has an arithmetic error.

32.5. In case the Bidder has not quoted unit price against any item, Employer shall treat the price of unquoted items as zero for the purpose of evaluation, comparison and award, with the assumption that the costs have been absorbed elsewhere in the Price Bid. If such a Bidder emerges as the successful Bidder, he shall be awarded the contract without any price/rate for the concerned items.

32.6. In case prices for some items are given by a Bidder as lump sum where unit rates are required, Employer reserves the right to arrive at unit rate on the basis of dividing the entered lump sum amount by the specified quantity.

33. Detail Evaluation and Comparison of Bids

33.1. The Employer shall evaluate each Bid that has been determined, up to this stage of the evaluation, to be substantially responsive. To evaluate a Bid, the Employer shall only use the factors, methodologies and criteria defined in ITB 33. No other criteria or methodology shall be permitted.

33.2. To evaluate and compare Bids, Employer shall consider the following:

a) the final bid price, as quoted in accordance with ITB. 18 in the priced BoQ;

b) price adjustment for correction of arithmetic errors in accordance with ITB. 32;

c) price adjustment due to discounts offered in accordance with ITB. 18;

d) the cost of withdrawal of declared deviations as per Form: 5 of Section III and in accordance with ITB. 33.4;

e) adjustments due to the application of the evaluation criteria specified in the BDS or those set out in the Evaluation and Qualification Criteria uploaded in the Employer's/relevant website; and

33.3. adjustment due to the application of a margin of preference, in accordance with ITB 34, if applicable.Employer's evaluation of a bid shall exclude and not take into account any allowance for price adjustment during the period of execution of the contract, if provided in the Bid.

33.4. The evaluation shall be based on the evaluated cost of fulfilling the Contract in compliance with all commercial, contractual and technical obligations under the Bidding Documents. In arriving at the evaluated cost, the price for withdrawal of deviations shown in Form: 5 of Section III of the bid shall be used. Where necessary, if cost of withdrawal of any deviation is not given in Form: 5 of Section III, the Employer shall make its own assessment of the cost of such a deviation for the purpose of ensuring fair comparison of Bids.

33.5. For the purpose of comparison, the total price offered by Bidders shall be calculated based on ITB. 33. Employer shall compare the total price offered by all substantially responsive bids of qualified Bidders to determine the lowest evaluated Bid.

33.6. If the lowest evaluated Bid appears abnormally low and/or seriously unbalanced, Employer may require the Bidder to produce written explanations of justifications and detailed price analysis for any or all items of the Bill of Quantities to demonstrate the internal consistency of those prices with the construction methods and schedule proposed. Abnormally low Bid may or may not be accepted. If Employer decides to accept the abnormally low Bid /or the Bid with seriously unbalanced rates after considering the above, the Bidder shall be required to provide additional differential security in addition to the performance security, an equivalent to the difference between the estimated and quoted price to a maximum of (ten percent) 10% of the quoted price, to protect Employer against any financial loss in the event of default of the successful Bidder under the Contract. If the lowest evaluated Bid is abnormally high in the discretion of the Employer, then the Employer may seek justification for the high rates and if necessary, negotiate with the lowest evaluated Bidder and may reject the bid if considered to be abnormally higher than the estimate.

33.7. Employer reserves the right to accept or reject any variation, deviation or alternative offer. Variations, deviations and alternative offers and other factors which are in excess of the requirements of the Bidding Documents or otherwise result in unsolicited benefits for Employer shall not be taken into account in Bid evaluation.

34. Margin of preference

34.1. If specified in the BDS, domestic Contractors may receive a margin of preference in during evaluation, for which this clause shall apply.

34.2. A domestic Bidder shall provide all evidence necessary to prove that it meets the following criteria to be eligible for a margin of preference in the comparison of its Bid with those Bidders who do not qualify for the preference. A domestic Bidder shall:

a) be registered within Bhutan, constituted under and governed by the civil, commercial or public law of Bhutan, and have its statutory office, central administration or principal place of business there;

b) have majority ownership by nationals of Bhutan;

c) not subcontract more than twenty percent (20%) of the initial Contract Price, excluding provisional sums, to foreign contractors, suppliers and/or consultants.

34.3. Joint Ventures, Consortia and Associations of domestic firms may be eligible for the margin of preference provided that:

- the individual partners satisfy the criteria of eligibility of ITB 34.2 (a) and (b);
- the JV/C/A is registered in Bhutan;
- the JV/C/A does not subcontract more than ten percent (10%) of the initial Contract Price, excluding provisional sums, to foreign firms; and
- the JV/C/A satisfies any other criteria specified for the purpose of domestic preference eligibility, as specified in the BDS.

34.4. The procedure used to apply the margin of preference shall be as stipulated in the BDS.

35. Subcontracting

35.1. Unless otherwise stated in the BDS, Employer does not intend to execute any specific elements of the Works by subcontractors. If permitted, Bidders may propose subcontracting for part of works as specified in the BDS.

36. Employer's Right to Accept Any Bid and to Reject Any or All Bids

36.1. Employer reserves the right to accept or reject any bid, and to annul the bidding process and reject all bids at any time prior to contract award, without thereby incurring any liability to Bidders or any obligation to inform the affected Bidders of the grounds for such action of the Employer.

E. Award of Contract

37. Award Criteria

37.1. Employer shall award the Contract to the successful Bidder whose bid has been determined to be substantially responsive and to be the lowest evaluated Bid, further provided that the Bidder is determined to be eligible and qualified and has the capacity and capability to fulfil the contract in accordance with relevant provisions of the bidding document.

38. Notification of Award

38.1. Prior to the expiry of the period of bid validity, Employer shall notify the successful Bidder, through a Notification of Award (NoA) as per Form: 1 of Section VII in writing, that its bid has been accepted indicating the award price. The successful bidder shall return a copy of the Notification of Award to Employer after duly recording "Accepted Unconditionally" under the signature of the authorized signatory within seven (7) days of the date of notification of award.

38.2. Until a formal contract is prepared and executed, the NoA shall constitute a binding contract between the successful Bidder and Employer.

38.3. Upon the furnishing of performance security pursuant to ITB.40 by the successful Bidder, Employer shall:

a) Promptly notify each unsuccessful Bidder and return their bid security; and
b) Publish a notification of award on its website.

39. Debriefing by Employer

39.1. On receipt of Notification of Award, an unsuccessful Bidder has three (3) working days to make a written request to Employer for a debriefing. Employer shall provide a debriefing to all unsuccessful Bidders whose request has been received within this deadline.

39.2. Where a request for debriefing has been received within the deadline, Employer shall provide a debriefing within five (5) working days.

39.3. Employer shall discuss only such Bid and not the bids of other competitors. The debriefing shall not include:

a. point-by-point comparisons with another Bid; and

b. information that is confidential or commercially sensitive to other Bidders.

39.4. The purpose of debriefing is to inform the aggrieved Bidder of the reasons for lack of success, pointing out the specific shortcomings in its bid without disclosing contents of other bids.

40. Performance Security

40.1. Within thirty days (30) days after receipt of the Notification of Award the successful Bidder shall submit Performance Security equal to 10% of the Contract Price and in the form stipulated in the BDS, denominated in the type and proportions of currencies in the Notification of Award.

40.2. Failure of the successful Bidder to comply with the requirements of ITB. 40.1 and shall constitute sufficient grounds for cancellation of the award and forfeiture of the Bid Security.

40.3. Upon the successful Bidder's signing of the Contract and furnishing of the Performance Security pursuant to ITB 41.1, the Employer shall promptly notify the name of the winning Bidder to each unsuccessful Bidder and shall discharge the Bid Securities of the unsuccessful Bidders.

41. Signing of Contract

41.1. Upon accepting the Notification of Award (NoA), the successful Bidder shall submit the Performance Security and sign the Contract within thirty (30) days as per form 3 Section VII.

41.2. Where the Contract is not signed by both parties in person:

a) The Employer shall send to the successful Bidder a duly signed copy comprising of complete Contract documents and the NoA. These documents shall be signed

by the successful Bidder or its duly authorized representative, together with the date of signature, in order for the Contract to be effective;

b) The NoA shall indicate the deadline within which the successful Bidder shall sign these documents with the date of signature and return a copy to the Employer, in accordance with the mode of delivery including electronic mode (e.g. scanned copy with electronic signature, etc.) as may be specified by the Employer in the NoA;

c) The Contract shall become effective from the date of signing these documents;

d) Failure of the successful Bidder to accept the award/ sign the contract shall constitute sufficient grounds for the annulment of the award and forfeiture of the bid security.

42. Vendor Performance Management System (VPMS)

42.1. The performance of the Contractor shall be assessed as per the VPMS available in the Employer's website for the purpose of assessing the performance of the Contractor. In addition to this, any other Contractor performance rating system may apply, as applicable.

43. Complaint and Review

43.1. If the Bidder has or is likely to suffer, loss or injury due to breach of a duty imposed on the Employer by the provisions of this bidding document, the Bidder shall submit the complaint in writing to the Employer within five (5) days from the date of Notification of Award.

43.2. The Head of Procuring Agency shall, within 5 days after the submission of the complaint, issue a written decision.

SECTION II – BID DATA SHEET

BHUTAN POWER CORPORATION LTD.
BPC
THIMPHU, BHUTAN

BID DATA SHEET

The Bid Data Sheet (BDS) contains information and provisions that are specific to a particular bidding process. The Employer must specify in the BDS only information that the Instructions to Bidders (ITB) request to be specified in the BDS. All information shall be provided, and no clause shall be left blank. To facilitate the preparation of the BDS, its clauses are numbered with the same numbers as the corresponding ITB clauses. This guide provides information to the Employer on how to enter all required information, and includes a BDS format that summarizes all information to be provided.

Whenever there is a conflict, the provisions herein shall prevail over those in the ITB.

ITB	Particulars
4.4	The Bidder ***not*** required to be represented by an agent in Bhutan.
5.1(h)	Insert names of the countries from which contracting of works or any payments to persons or entities in that country are prohibited. Name of the countries: ***[Not applicable]***
6.2 and 6.12	Joint Venture/Consortium (JV/C) Bids are permitted:***"No"***
9.1, 9.4 and 12.1	For Bid clarification purposes, the Employer's address is: Attention:***Sr. Divisional Manager*** Address:***Electricity Service Division, Trongsa*** Phone number: *975-03-521102* Electronic mail:*esdtrongsa@bpc.* Bid clarification request will be received on or before: Time : *17:00 Hrs* Date : March 15, 2024
10.1	The bidder should visit the site along with the official from ESD Trongsa, BPC before submission of document. The employer shall not be responsible if there are abnormal price either due to not visiting site or error in bidder's estimation.
11.1	A pre-bid meeting***" shall not"*** take place at the following:

BHUTAN POWER CORPORATION LTD. BPC TRONGSA : BHUTAN

15.1	Alternative Bids ***"shall not be"*** permitted.
16.1 (i)	The Bidder shall submit with its Bid the following additional documents: a*) Valid Trade License;* *b) Latest Tax Clearance Certificate;* *c) Valid CDB registration certificate;*
16.1 (g)	Deviation to any of these clauses anywhere in the Bid shall not be permitted: i. GCC 1.4: Governing Laws ii. GCC 19: Settlement of Disputes iii. GCC 13: Contract Price iv. GCC 3.2: Performance Security v. GCC 15.4: Patent Indemnity vi. GCC 10.3: Defect Liability vii. GCC 15.5: Limitations of Liability viii. GCC 8.1: Time for Commencement and Completion
19.2	The prices quoted by the Bidder ***"shall not"*** be adjustable.
20.1	The Currencies of Bid shall be ***"Bhutanese Ngultrum".***
21.1	The Bid validity period shall be ***60 days*** from the last date of bid submission i.e., up to ***May 18, 2024.***
22.1	The Bidder shall furnish a bid security in the amount of **Nu. 82,000.00** ***[Eighty two thousand for Package A: O&M and Civil Work] and*** **Nu. 71,400.00** ***[Seventy One thousand four hundred for Package A: Plan Work]*** only shall be valid up to ***June 17, 2024*** in favor of Sr. Divisional Manager, ESD Trongsa.
22.2	The Bid Security shall be provided in any one of the following forms issued/enforceable by any Financial Institutions in Bhutan: i. i. An unconditional and irrevocable Bank Guarantee; or

	ii. ii. A Banker's Cheque/ Cash Warrant; or iii. iii. A Demand Draft; or
22.4	The Bid Security shall be valid till: ***June17, 2024.***
23.1	In addition to the original Bid, the number of copies is: ***One***
24.1	A Bidder shall submit only one (1) Bid. A Bidder who submits or participates in more than one (1) Bid shall cause all the proposals with the Bidder's participation to be disqualified. However, Bidders can participatein both package A – BoQ I and Package A – BoQ II.
24.3	For the purpose of bid submission only, the Employer's address is: ***Sr. Divisional Manager,*** ***Electricity Services Division, Trongsa*** ***Distribution & Customer Services Division,*** ***Distribution Department,*** ***Bhutan Power Corporation Limited.***
24.4	1. Single Stage Single Envelope Superscript of Cover Envelope: *"CONFIDENTIAL"* Bid for Labour contract a. Plan and O&M works b. Civil Work, Proving and Laying - Package Q15- 2024 [NIT No. BPC/ESD/Tro/tech-05 dated March 01, 2024]. *Name and address of Bidder:* …… *Not to be Opened Before Due Date for Opening on:**11:00 Hrs, March 18, 2024***
24.10	Bidders ***"shall not"***have the option of submitting their Bids electronically.

28.1	The Bid Opening shall take place at: Venue: ***Conference Hall, ESD Trongsa*** Date: ***March 18, 2024*** Time (BST): ***11:00 Hrs***
33.2 (e)	In addition to the requirements specified in ITB.16.1, the following qualifying requirement shall be met by the Bidder : ***Not Applicable*** A. Experience and Technical Capability *B. Financial Capacity* *(i) Net-worth of the Bidder for the financial year* *(ii) Average annual turnover for last three (3) financial years* *(iii) Credit facility* C. Bid Capacity
33.5	The evaluation shall be based on the lowest price of the responsive bidder and the work will awarded to the lowest responsive bidder.
34.1	Margin of domestic preference of ten percent (10%) ***"shall not"*** apply
34.4	*The procedure used to apply the margin of preference shall be:* ***Not applicable***
35.1	The ceiling for sub-Contractor's participation and conditions are: ***Not applicable***
37.1	The Employer shall award the Contract to the Bidders whose offer is substantially responsive to the Bidding Document and that has been determined to be the lowest evaluated Bid, provided that the bidder is determined to be qualified to perform the Contract satisfactory. If the sole bidder submits the substantially lowest evaluated bid for both Package A – BoQ I and Package A – BoQ II, the employer will not award both packages to the bidder; the Tender committee has the right to decide which package to award.
40.1	The Performance Security shall be provided in any one of the following forms issued by a reputable Financial Institution and enforceable in any

	Banks in Bhutan: (a) Unconditional bank guarantee in the form provided in Section VII, Contract Forms; or (b) Demand draft; or (c) Cash warrant

BHUTAN POWER CORPORATION LTD. BPC TRONGSA : BHUTAN

SECTION III – BIDDING FORMS

BHUTAN POWER CORPORATION LTD.
BPC
TRONGSA BHUTAN

SECTION III – BIDDING FORMS

(Form No. 1 to Form No. 8)

Applicable forms from this section shall be submitted by the Bidder along with the Bid

BHUTAN PETROLEUM CORPORATION LTD.
BPC
PHUNTSHOLING BHUTAN

FORM 1: BID SECURITY (BANK GUARANTEE)

Bank Guarantee No. .....

Date.....

To

[Employer's Name and Address]

Dear Sir/ Madam,

In accordance with NIT No. ....., M/s ..... having its Registered/Head Office at ..... (Here-in-after called the 'Bidder') wish to participate in the said Tender for .....*[Name of Package]* .....

As an unconditional and irrevocable bank guarantee against Bid Security for an amount of .....*[insert currency and amount in words and figures*]* ..... valid up to.....*[insert date@]* .....is required to be submitted by the Bidder as a condition precedent to participating in the said Tender which amount is liable to be forfeited on the happening of any of the events mentioned in the Bidding Document.

We, the ..... *[Name & address of the Bank]* ..... having our Head Office at ..... (#) ..... guarantee and undertake to pay immediately on demand by the Employer or its authorized representative, the amount of .....*[insert currency and amount in words and figures*]* ..... without any reservation, protest, demand and recourse. Any such demand made by Employer shall be conclusive and binding on us irrespective of any dispute or difference raised by the Bidder.

This Guarantee shall be irrevocable and shall remain valid up to .....(@) ..... If any further extension of this guarantee is required, the same shall be extended to such required period on receiving instructions from M/s..... *[Bidder's Name]* ..... on whose behalf this guarantee is issued.

All rights of Employer under this Guarantee shall be forfeited and the Bank shall be relieved and discharged from all liabilities there under unless a demand or claim is lodged by Employer under this Guarantee against the Bank within thirty (30) days from the above-mentioned expiry date of validity or, from that of the extended date.

In witness where of the Bank, through its authorized officer, has set its hand and stamp on this.....day of.....20.....at.....

BHUTAN ELECTRICITY AUTHORITY LTD. BPC dir Company TRONGSA : BHUTAN

WITNESSES: SIGNATURE OF AUTHORIZED SIGNATORY OF THE BANK

1. ……..……

(signature)

……

(Name)

……..

(Official address)

1……

(signature)

……..

(Name)

……..……...

(Designation)

Authorized vide
Power of Attorney No……
Date……

2. ……..……

(signature)

……

(Name)

……..

(Official address)

2……

(signature)

……..

(Name)

……..……...

(Designation)

Authorized vide
Power of Attorney No……
Date……

Note *(*) Shall be as specified in the BDS.*
(@) The Bid security shall be valid till the date as specified in BDS.
(#) Complete mailing address of the Head Office and issuing branch of the Bank tobe given with fax no./telephone no. of the contact person

BHUTAN POWER CORPORATION LTD. TRONGSA BHUTAN BPC

FORM 2: INTEGRITY PACT STATEMENT

This agreement should be a part of the tender document, which shall be signed and submitted along with the tender document. The head of the employing agency/or his authorized representative should be the signing authority. For the Bidders, the Bidder himself or his authorized representative must sign the integrity pact (IP). If the winning Bidder had not signed during the submission of the bid; the tender shall be rejected/cancelled.

INTEGRITY PACT

1: General

Whereas the ***Mr. Ugyen Thinley, Sr. Divisional Manager, ESD, Trongsa BPC*** here in after referred to as the Employer one part, and (Mr.....representing the (*name of person, the firm/construction Employer*) on the other part (hereafter referred to as the Bidder) here by execute this agreement as follows:

2. Objectives

Now, therefore, the employer and the Bidder agree to enter into this pre-contract agreement, here in after referred to as integrity pact, to avoid all forms of corruption by following a system that is fair, transparent and free from any influence/ unprejudiced dealings prior to, during and subsequent to the currency of the contract to be entered into, with a view to:

2.1. Enable the Employer to obtain the desired contract at a reasonable and competitive price in conformity to the defined specifications of the works, goods and services; and

2.2 Enable Bidders to abstain from bribing or any corrupt practice in order to secure the contract by providing assurance to them that their competitors shall also refrain from bribing and other corrupt practices and the Employer shall commit to prevent corruption, in any form by their officials by following transparent procedures.

3. Commitments of the Employer

The Employer commits itself to the following:

3.1. The Employer hereby under takes that no official of the Employer, connected directly or indirectly with the Contract, shall demand, take a promise for or accept, directly or through intermediaries, any bribe, consideration, gift, reward favour or any material or immaterial benefit or any other advantage from the Bidder, either for themselves or for any person, organization or third party related to the Contract in exchange for an advantage in the bidding process, bid evaluation, contracting or implementation process related to the Contract.

3.2. The Employer further confirms that its officials have not favored any prospective Bidder in any form that could afford an undue advantage to that particular Bidder during the tendering stage, and shall further treat all Bidders alike.

3.3 All the officials of the Employer shall report to the Chief Executive Officer, Employer, any attempted/completed violation of clauses 3.1 and 3.2.

BHUTAN POWER CORPORATION LTD. BPC TRONGSA BHUTAN

3.4 Following report on violation of clauses 3.1 and 3.2 by official (s), through any source, necessary disciplinary proceedings, or any other action as deemed fit, including criminal proceedings may be initiated by the Employer and such a person shall be debarred from further dealings related to the Contract process. In such a case while an enquiry is being conducted by the Employer the proceedings under the Contract would not be stalled.

4. Commitments of Bidders

The Bidder commits himself to take all measures necessary to prevent corrupt practices, unfair means and illegal activities during any stage of his bid or during any pre-contract or post-contract stage in order to secure the Contract or in furtherance to secure it and in particular commits himself to the following:

4.1 The Bidder shall not offer, directly or through intermediaries, any bribe, gift, consideration, reward, favour, commission, fees, brokerage, any materials or immaterial benefit to any official of the Employer, connected directly or indirectly with the bidding process, or to any person, organization or third party related to the contract in exchange for any advantage in the bidding, evaluation, contracting and implementation of the Contract.

4.2 The Bidder further undertakes that he has not given, offered or promised to give, directly or indirectly any bribe, gift, consideration, reward, favour, commission, fees, brokerage, any material or immaterial benefit to any official of the Employer or otherwise in procuring the Contract or forbearing to do or having done any act in relation to the obtaining or execution of the Contract or any other contract with the Employer for showing or forbearing to show favour or disfavor to any person in relation to the Contract or any other contract with the Employer.

4.3 The Bidder shall not collude with other parties interested in the contract to preclude the competitive bid price, impair the transparency, fairness and progress of the bidding process, bid evaluation, contracting and implementation of the contract.

4.4 The Bidder, either while presenting the bid or during pre-contract negotiations or before signing the contract, shall disclose any payments he has made, is committed to or intends to make to officials of the Employer of their family members, agents, brokers or any other intermediaries in connection with the contract and the details of services agreed upon for such payments.

4.5 The Bidder shall not enter into any monetary dealings or transaction, directly, with any tender committee member, and if he does so, the Employer shall be entitled forthwith to rescind the Contract and all other contracts with the Bidder.

5. Sanctions for Violation

The breach of any aforesaid provisions or providing false information by employers, including manipulation of information by evaluators, shall face administrative charges and penal actions as per the existing relevant rules and laws.

The breach of the Pact or providing false information by the Bidder, or any one employed by him, or acting on his behalf (whether with or without the knowledge of the Bidder), or the

commission of any offence by the Bidder, or any one, employed by him, or acting on his behalf, shall be dealt with as per the provisions of the Penal Code of Bhutan, 2004, and the Anti – Corruption Act, 2006.

In the event of a breach, the Employer shall also take all or any one of the following actions, wherever required:

5.1 Immediately call off the pre-contract negotiations without giving any compensation to the Bidder. However, the proceedings with the other Bidder(s) would continue.

5.2 Immediately cancel the contract, if already awarded/signed, without giving any compensation to the Bidder.

5.3 Forfeit the Earnest Money/security deposited with the Employer.

5.4 Recover all sums already paid to the Bidder.

5.5 Encash the advance bank guarantee and performance bond /warranty bond, if furnished by the Bidder, in order to recover the payments, already made by the Employer, along with interest.

5.6 Cancel all or any other Contracts with the Bidder.

5.7 Debar the Bidder from entering into any bid from the Employer as per the Debarment Rule.

6. Examination of Books of Accounts

6.1 In case of any allegation of violation of any provisions of this integrity pact or payment of commission, the Employer/authorized persons or relevant agencies shall be entitled to examine the Books of Accounts of the Bidder and the Bidder shall provide necessary information of the relevant financial documents and shall extend all possible help for the purpose of such examination.

7. Monitoring and Arbitration

7.1 The Employer shall be responsible for monitoring and arbitration of IP as per the procurement rules.

8 Legal Actions

8.1 The actions stipulated in this integrity pact are without prejudice to any other legal action that may follow in accordance with the provisions of the extant law in force relating to any civil or criminal proceeding as.

9. Validity

9.1 The validity of this integrity pact shall cover the tender process and extend until the completion of the contract to the satisfaction of both the employer and the Bidder.

BHUTAN POWER CORPORATION LTD. DPC the Company TRONGSA : BHUTAN

9.2 Should one or any provision of this pact turn out to be invalid, the remainder of this pact remains valid. In this case, the parties shall strive to come to an agreement to their original intentions.

We, hereby declare that we have read and understood the clauses of this agreement and shall abide by it. Further, the information provided in this agreement is true and correct to the best of our knowledge and belief.

The parties here by sign this Integrity pact at (*name and location of place*) on (*dd/mm/yy*).

BHUTAN NU 10

Senior Divisional Manager
Electricity Services Division
Bhutan Power Corporation Ltd
Trongsa

BHUTAN POWER CORPORATION LTD. TRONGSA BHUTAN BPC

EMPLOYER

CID: 10709003751

.....

BIDDER

CID:.....

Witness

Name Prithi Raj Gurung

CID: 10304001212

Name.....

CID:.....

FORM 3: BIDDER'S INFORMATION FORM

[The Bidder shall fill in this Form in accordance with the instructions indicated below. No alterations to its format shall be permitted and no substitutions shall be accepted.] Not applicable

Date: .....*[insert date of Bid submission]* .....

NIT No.

1.	Bidder's Legal Name
2.	In the case of Joint Venture (JV) legal name of each member of the Joint Venture:
3.	Bidder's or each member of JV's Country of Registration:
4.	Bidder's or Each member of JV's Year of Registration:
5.	Bidder's or Each member of JV's Legal Address in Country of Registration:
6.	Bidder's or Lead member of JV's Local Address in Bhutan (if any):
7.	Bidder's or Each member of JV's Website Address:
8.	Bidder's or Each member of JV's Business Activities:
9.	Bidder's Lead member of JV's Authorized Representative Name: Designation: Address: Telephone: E-mail Address:
10.	Bidder's or Lead member of JV's Authorized Representative in Bhutan (if any) Name of the Employer or firm: Name of the contact person: Designation: Address:

BHUTAN PETROLEUM CORPORATION LTD. BPC TRONGSA : BHUTAN

	Telephone: E-mail Address: Services to be provided by the local representative:
11.	Status of the Bidder (check the box as applicable): • Bidding Company • Lead Member of the Joint Venture • Agent of the Foreign Bidder
12.	Attached are copies of the following original documents: *[check the box(es) of the attached original documents]* • Tax Clearance Certificate of Bidder named in 1or 2 above (applicable for Bhutanese Bidders) • Trade License of Bidder named in 1or 2 above (applicable for Bhutanese Bidders) • Certificate of Incorporation or Registration of Bidder named in 1or 2 above • Any other certificate to support the legal entity of the Bidder named in 1or 2 above

Date:

Place:

Signature.....

Name.....

Designation.....

Seal.....

FORM 4: POWER OF ATTORNEY

KNOW ALL MEN BY THESE PRESENTS THAT WE, ... *[insert name of the Bidder]* ..... an Employer incorporated under the ..... *[insert relevant statute of the country of incorporation]* ..... and having its registered office at ..... *[insert address]* ..... (Hereinafter referred to as the "Bidder") having been authorized by the Board of Directors of the Employer, inter alia, to execute contracts in the name of and for and on behalf of the Employer. I ..... *[insert nameof the person giving the power of attorney]* ..... presently holding the position of .....*[insert designation of the person giving the power of attorney]* ..... in the Employer do hereby constitute, appoint and authorize Mr..... [*insert name, designation and residential address of the person to whom the power of attorney is being given]* ..... as our true and lawful attorney to do in our name and on our behalf all such acts, deeds, things necessary and incidental to submission of our Bid against NIT No. ....., floated by Employer. I hereby further authorize the above attorney for signing and submission of the Bid and all other documents, information related to the Bid including undertakings, letters, certificates, declarations, clarifications, acceptances, guarantees, any amendments to the Bid and such documents related to the Bid, and providing responses and representing us in all the matters before Employer in connection with the Bid for the said NIT till the completion of the bidding process.

I accordingly hereby nominate, constitute and appoint above named ..... severally, as my lawful attorney to do all or any of the acts specifically mentioned immediately herein above.

WE do hereby agree and undertake to ratify and confirm whatever the said Attorney shall lawfully do or cause to be done under and by virtue of this power of Attorney and the Acts of Attorney to all intents and purposes are done as if I had done the same on behalf of the Employer if these presents had not been made.

IN WITNESS whereof I, ... have executed these presents this the ..... day of .....at .....

EXECUTANT

Signature.....

Name: .....

Designation.....

ACCEPTED:

Signature of Attorney.....

Name: .....

Designation.....

Signature of the Attorney Attested

.....

EXECUTANT

Name.....

Designation.....

Office Seal.....

Note: *The Power of Attorney should be notarized as per applicable legal provisions in the country of the Bidder*

FORM 5: DEVIATION SCHEDULE (IF APPLICABLE)

NIT No: _____

To:

[Employer's relevant official, name and address]

Sir/Madam,

The following are the deviations and variations from and exceptions to the terms, conditions and specifications of the Bidding Documents for procurement of.....*[insert brief description of works]* ..... These deviations and variations are exhaustive. We are furnishing below the cost of withdrawal for the deviations and variations stated in this Form. We shall withdraw the deviations proposed by us in this Form at the cost of withdrawal indicated herein, failing which our Bid may be rejected and bid security forfeited.

We confirm that except for the deviations and variations stated in this Form to our Bid, the entire work shall be performed as per specifications and conditions of the Bidding Documents without any extra cost to Employer, irrespective of any mention to the contrary anywhere else in the Bid, failing which our Bid may be rejected and Bid security forfeited.

Further, we agree that additional condition, deviation, if any, found in the Bidding Documents other than those stated in this Form, save those pertaining to any rebates offered, shall not be given effect to.

Section / Clause No	Page No.	Statement of Deviations	Cost of withdrawal

Date: (Signature).....

Place: (Name).....

(Designation).....

(Seal).....

Note: Continuation sheets of like size and format may be used and annexed to this Form if required.

FORM 6: BID SUBMISSION FORM

Date:

NIT no.**BPC/ESD/Tro/Tech-05/2024 dated March 01, 2024**

Title of Contract: a. **Labour contract of Plan and O&M Work**

b. Civil Work, Providing and Laying : Package Q14-2023

To:

……..,

……..,

……

Employer

[*Address*]

We, the undersigned, declare that:

a) Having examined all the Bidding Documents (with reference ITB 10), including addenda ……*[insert list]*, we offer to execute the ……(*name and title of the contract/work*) in accordance with the Conditions of Contract accompanying this Bid for the Contract Price of *BTN*…… *(In figures), Ngultrums*…… *(In words).*

b) This Bid and your written acceptance of it shall constitute a binding Contract between us. We understand that you are not bound to accept the lowest or any Bid you receive.

c) We hereby confirm that this Bid complies with the Bid validity and Bid Security required by the Bidding Documents and specified in the Bidding Data Sheet.

d) We, including any subcontractors for any part of the Contract, have nationalities from eligible countries in accordance with ITB Clause 7;

e) We have no conflict of interest in accordance with ITB sub clause 5.2;

BHUTAN POWER CORPORATION LTD. BPC TRONGSA : BHUTAN

f) Our firm, its affiliates or subsidiaries—including any subcontractors for any part of the Contract—has not been declared ineligible under the laws or official regulations of Bhutan, in accordance with ITB Clause 6 and other relevant clauses.

g) Commissions or gratuities, if any, paid or to be paid by us to agents relating to this Bid, and to contract execution if we are awarded the contract, are listed below:

Name & address of agent	Amount & Currency	Purpose of commission or gratuity

* *If none, please state none*

h) Our duly executed Integrity Pact Statement is attached herewith.

j) We accept the vendor performance management system.

AUTHORIZED SIGNATURE: _____ (AFFIX LEGAL STAMP)

Name and title of signatory: .....

Name of Bidder: _____

Address: .....

BHUTAN POWER CORPORATION LTD. BPC TRONGSA : BHUTAN

FORM 7: BILL OF QUANTITIES

(Attached)

SN	Name of Works/Packages	BoQ No
1	Package A: O&M and Civil Works	BoQ-1
2	Package B: Plan WorkCivil Work	BoQ-2

BHUTAN POWER CORPORATION LTD. BPC TRONGSA BHUTAN

FORM 8: PRICE ADJUSTMENT DATA

NIT No:

To,

[Name, Designation and address of Employer]

Dear Sir,

We hereby furnish the relevant details pertaining to the price adjustment provisions in your specifications and documents.

Sl No.	Variables	Name of published index and its origin	Value of indices as on 30 days prior to date set for Opening of bids.
	Material		
	Labour		

Date:

Place:

Signature.....

Name.....

Designation.....

Seal.....

Note:

1. *Bidders shall note that it is mandatory to furnish the values of various indices and name, source & origin of the published indices, wherever called for in the bidding document. Bidders are also required to mention whether the indices are monthly average, weekly average or as applicable.*

** Continuation sheets of like size & format shall be used, if required, in case number of currencies is more than one.*

BHUTAN PETROLEUM CORPORATION LTD. BPC TRONGSA, BHUTAN

*** Continuation sheets of like size and format may be used, if countries of origin of expatriate labour are more than one.*

Price Schedule

The quantities mentioned here are indicative and are estimated values. These are subject to change at the time of execution. Payments shall be made based on the actual volume of works at the rate or price schedule of the contract.

BHUTAN POWER CORPORATION LTD. BPC TRONGSA BHUTAN

BILL of Quantities

Package A: O&M and Civil Works

BoQ - I

BHUTAN POWER CORPORATION LTD.
BPC
TRONGSA : BHUTAN

Package A: O&M and Civil Works, BoQ

1. O&M WORKS

Sl.No	Description of work	Unit	Quantity	Rate	Amount
A. RoW Cutting and clearing					
1	Cutting and Clearing of Right of Way (RoW) 12 m width for 33 kV line. Need to carry out cutting of trees & trunks, debranching including thorough cleaning of bushes, creepers, bamboos along the line and all underneath growth. The 12m width for 33kV shall be cut depending upon the location landscape. For example; If more of trees/branches needs to be cut at upper side, then more width shall be cut at upper side than at lower side & vice versa. The measurement will be done as per the actual work done, point by point at ground zero by GPS equipment and the line length will not be considered.				
1.1	D/C DHI- Line	KM	11.47		
1.2	Nimshong-Nabji/ Korphu HT line	KM	16.313		
1.3	Wangray- HT Line	KM	0.606		
1.4	Reotala HT line	KM	9.098		
1.5	Taktse 33 kV line (Kewathang to Tashidingkha)	KM	8.53		
1.6	Semji 33 kV line (Kewathang to Sherabling)	KM	2.7		
2	Cutting and Clearing of Right of Way (RoW) 4 m width for LV ABC line. Need to carry out cutting of trees & trunks, debranching including thorough cleaning of bushes, creepers, bamboos along the line and all underneath growth. The 4m width for 33kV shall be cut depending upon the location landscape. For example; If more of trees/branches needs to be cut at upper side, then more width shall be cut at upper side than at lower side & vice versa. The measurement will be done as per the actual work done, point by point at ground zero by GPS equipment and the line length will not be considered.				
2.1	LV lines- Nubi gewog	KM	23.382		
2.2	LV Lines- Drakten gewog	KM	19.422		
2.3	LV Lines- Langthel gewog	KM	23.382		
2.4	LV Lines- Korphu gewog	KM	8.766		
2.5	LV Lines- Tangsibji gewog	KM	4.29		
	Total A				

BHUTAN POWER CORPORATION LTD. BPC TRONGSA BHUTAN

B. Dismantle of 6.6kV Copper cable & 2 nos 50kVA transformer, MV and LV poles & fittings.

Sl.No	Description of Work	Unit	Quantity	Rate	Amount
1	Dismantle of 6.6kV Copper cable & 12m pole galvanized fixtures including rolling, transportation both headloading and vehicular to ESD, store. At Tanbsibji	KM	2.8		
2	Dismantle of 50kVA Transformer (step up & down) & its associate accessories including transportation both headloading and vehicular to ESD, store. At Tangsibji	No	2		
3	Dismantling of Single MV pole & fixtures at Tangsibji, Chendipji and Korphu	Set	11		
4	Dismantling of LV poles & fixtures at Kuengarabten and Bjepam	Set	16		
	Total B				

C. Improvement of low LV ground clearances and insertion of pole for lengthy service cable in and around Trongsa dzongkhag

Sl.No	Description of Work	Unit	Quantity	Rate	Amount
1	Digging of hole for 7.5m poles and Erections, including transportation from ESD Store to site	No	18		
2	Erection of suspension clamp	No	18		
3	Erection of Hook bolt assy	No	18		
4	Digging of holes for stay , Erection of stay sets including transportation from ESD Store to site	No	13		
5	Dismantling of single MV poles and fixtures	No	2		
6	Dismantling of Double MV poles and fixtures	No	2		
7	Erection of strain deadend clamp	No	12		
8	straightning of MV pole in identified locations and including fittings and fixtures of double poles and single poles.	No	10		
9	restringing /laying of LV ABC				
a	50 sq mm	km	0.2		
b	95 sq mm	km	0.2		
	Total C				

D. Rectifications of MV poles/ lines at Korphu, Langthel, Drakten, Tangsibji & Nubi Gewogs, Trongsa Dzongkhag.

Sl.No	Description of Work	Unit	Quantity	Rate	Amount
1	Digging of hole for 10m poles and Erections, including transportation from ESD Store to site	No	13		
2	Digging of holes for stay sets including transportation from ESD Store to site	No	9		
5	Pole Concreting/Muffing (old poles)	No.	6		
6	Erection of top hamper	No	8		
7	Erection of single pole cross arm assembly	No	8		
8	Erection of cross arm for H- frame (double pole)	No	5		
9	Erection of cross bracing for H- frame	No	5		
10	Pole painting if required	No	12		
11	Stringing of AAAC 111.3 sqmm conductor	km	0.5		
12	Stringing of ACSR rabbit conductor	km	0.3		
13	Erection of stay sets including transportation from ESD Store to site	No	5		

14	Erection of 33kV disc insulators including transportation from ESD store to site (1 set = 3 nos.)	Set	12		
15	Erection of 33kV pin insulators including transportation from ESD store to site (1 set = 1 no.)	Set	36		
16	Erection of spike earthing set complete with GI wire connection including transportation from ESD store to site.	Set	12		
17	Erection of anticlimbing device,danger plate including transportation from ESD store to site.	No	12		
18	straightning of MV pole in identified locations and including fittings and fixtures of double poles and single poles.	No	12		
	Total D				
E. Installation of LV UG & Distribution Pillar at Dzongkhalum					
a)Installation of LV UG cable					
Sl.No	**Description of Work**	**Unit**	**Quantity**	**Rate**	**Amount**
1	Digging of trench	km	0.70		
2	laying of LV UG cable along with sand bedding, protective covering and refilling (DIRECT BURIAL)				
i	150mm.sq(4c)	km	0.3		
ii	240mm.sq(4c)	km	0.4		
3	Erection of Route marker (20m span) along with concreting	km	0.60		
4	Erection of IPC for 50/95/120 sq mm	No.	28.00		
b) Installation of Distribution piller					
1	Erection of Distribution pillar including pcc base	No	7		
2	Earthing Connection	set	0.60		
3	Cable Termination	set	7.00		
	Total E				
F. Construction and Maintenance of 11kV RUM at Villing					
Sl.No	**Description of Work**	**Unit**	**Quantity**	**Rate**	**Amount**
1	Removal of existing 3C 150sqmm XLPE cable along with protective covering & rolling of cable including transporation to ESD, store	km	0.40		
2	laying of 3C 150sqmm XLPE cable and refilling the trench or Pipes	km'	0.40		
3	Dismentaling and Re-erection of RMU	No	1		
4	Demolishing stone rubble masonry including stacking useful materials & disposal of rubbish within 50m lead in Cement motor	cu.m	4.56		
5	Earthwork in foundation trenches or drains not exceeding 1.5m in width or 10 sq.m in area on plan including dressing & ramming, disposal of surplus soil within all lead and lifts - All kinds of soil	cu.m	0.20		
6	Filling of trenches, sides of foundations etc. in layers <200mm using selected excavated earth, ramming etc. within lead 50 m & lift 1.5m	cu.m	2.30		
7	Earthing Connection	set	1		
8	Cable Termination , Testing and commissioning	set	4.00		

	Note: Provide and Fixing works by Contractor (Built up items)				
9	P/L in position plain cement concrete 1:3:6 ,20 mm aggregates, excluding the cost of centering & shuttering - All work upto plinth level.	cu.m	4.94		
10	P/F centering and shuttering (formwork) including strutting, propping etc. and removal of form work. - Foundation and plinth .	sq.m	15.60		
11	Providing and laying hand packed stone soling or filling with stones	cu.m	0.66		
	Total F				
	Total Amount (1) = (A+B+C+D+E+F)				

2. CIVIL WORKS (Built up items, It is provide and fixing works by contractor)

A. Name of Work: Repair & Maintenance of Staff Quarters at Sherubling & maintenance of Office Plinth at ESD, Trongsa

Sl. No.	Description of Items	Unit	Qty.	Rate (Nu.)	Amount (Nu.)
	ESD Office and Sherabling Quarters				
1	Demolishing cement concrete 1:3:6 & richer, including disposal of materials within 50m lead (Plinth)	Cum	0.35		
2	Providing and laying hand packed stone filling or soling with stones.	cu.m	30.67		
3	Providing & laying in position plain cement concrete 1:2:4, 20mm graded crushed rock excluding the cost of centering and shuttering - All work upto plinth level	Cum	18.43		
4	Providing & fixing Plywood lining with necessary nails etc. inlcuding beading complete (excluding cost of frame)- 6mm, commercial in Ceilings & in between roof over hangs and the walls.	Sqm	11.00		
5	Providing & laying cement plaster, finished with floating coat of neat cemen, 20mm plaster in C.M 1:3	Sqm	15.44		
6	Providing and fixing centering and shuttering (formworks) including strutting, propping etc. and removal of formworks - In foundation and plinth etc.	Sqm	1.17		
	ESD Quarter near Trade office				
1	Dismantling wood work of sectional area 40 sq.cm and above in frames, trusses (<10m span) including stacking within 50m lead.	Cu.m	6.32		
2	Dismantling wooden flooring including stacking useful materials & disposal of rubbish within 50m lead.	Sqm	150.74		
3	Dismantling doors, windows, and clerestory windows <3sq.m (steel, wood) including architrave, hold fasts, stacking within 50m lead	Each	10.00		
4	Taking out doors, windows and clerestory windows shutters <3sq.m (steel, wood) including stacking within 50m lead	Each	10.00		
5	Providing & laying dry earth bedding, including filling with 100-150mm stone boulders (50% earth bedding & 50% stone filling) including consolidating each deposited layer by watering, ramming and dressing	Cum	105.52		
6	Providing and laying moisture barrier using plastic sheeting underlay- 100 micro-metre.(Flooring)	Sqm	150.74		

DRUKGYEL CONSTRUCTION CORPORATION LTD. TRONGSA : BHUTAN

7	Providing & fixing Mixed Conifer (undressed) in wall frames etc. including creating 2 hole in each room for ventilation purposes by dismantling the RRM wall in order to keep moisture out by fixing wire mesh (Design shown in the drawing)	Cum	2.29		
8	Providing & fixing Blue pine Flooring including fixing with iron screws etc. complete, excluding the cost of frame- 40mm thick, half-lapped	Sqm	160.74		
9	Providing & fixing in position dressed wood work in frames of doors, windows, clerestory windows and other frames, wrought and framed (Blue Pine)	Cum	0.66		
10	Providing & applying one coat of primers : Wood work - pink primer.	Sqm	26.93		
11	Providing and applying finishing coats-(same as existing one) Synthetic enamel, for steel & wood work, two coats on new work	Sqm	26.93		
12	Providing and applying wood stains, varnishes & polishes - French polish - two coats, on new work.	Sqm	150.74		
13	Providing and applying wood preservatives- coal tar, two coats on new work.	Sqm	152.55		
14	Providing and laying 20mm cement plaster in cement mortar 1:4	Sqm	6.60		
15	Providing & fixing wooden skirting in mixed conifer with necessary nails or screws complete- 20mm x 150mm ht.	Sqm	22.71		
	Tiling -wall & Floor (Sherubling, Kewathang and ESD, Office)				
1	Providing & fixing white/ coloured glazed tiles (Anti Skid Tiles) same as existing in flooring, treads of steps and landings laid on bed of 12mm thick cement mortar 1:3 finished with flush pointing in white cement: for 300 x 300 mm.	Sqm	4.16		
	TOTAL - A				
B. Construction of Chain Link fencing at ESD, Office, Trongsa.					
Sl. No.	**Description of Items**	**Unit**	**Qty.**	**Rate**	**Amount (Nu.)**
	DISMANTLING & DEMOLITION WORK				
1	Demolishing cement concrete 1:3:6 & richer, including disposal of materials within 50m lead.	Cum	2.88		
2(a)	Dismantling steelwork in built up sections in channels, angles, tees and flats in all gusset plates, bolts, nuts, cutting rivets, welding etc. including dismembering and stacking within 50 m lead, Angle Post (50x50x6)mm & M.S. Falts, (50x6)mm	Kg	570.2		
2(b)	Chain link fencing cutting rivets, welding ect within 50 m lead and to reach at Kewathang store (L=70 mtrs, H=2mtrs)	Mtr	70.00		

BHUTAN POWER CORPORATION LTD. BPC TRONGSA BHUTAN

3	Excavation in foundation trenches or drains not exceeding 1.5m in width or area 10 sqm on plan, including dressing and ramming, disposal of surplus soil within 50m lead and 1.5m lift - all types of soil along chain link Fencing	Cum	71.00		
4	Filling of trenches, side of foundation etc. in layers<200mm using selected excavated earth, ramming within 50m lead and lift 1.5m	Cum	31.00		
5	Providing and laying hand packed stone filling or soling with stones.	Cum	4.20		
6	Providing and laying plumb concrete with PCC 1:3:6, 20mm graded crushed rock including filling with 100-150mm stone boulders for protection of post/channel for chain link fencing. (50% PCC & 50% stone filling) 20mm nominal size graded crushed rock excluding the cost of centering and shuttering - All works upto plinth level including fixing of (50*50*5)mm Post	Cum	45.80		
7	Providing and laying in position plain cement concrete 1:3:6, 20mm nominal size graded crushed rock excluding the cost of centering and shuttering - All works upto plinth level including fixing of (50*50*5)mm Post near ESD, Sign board.	Cum	1.40		
8	Providing and fixing centering and shuttering (formworks) including strutting, propping etc. and removal of formworks - In foundation and plinth etc.	Sqm	153.60		
9	Steel work in single section including	kg	786.04		
10	Providing and fixing G.I. chain link meash including fixing of posts or struts, track welding (excluding the post/struts, earthwork, concrete, etc.)- 4mm (8SWG) x 50mm	Sqm	168.00		
	TOTAL -B				

C. Name of Work : Repair & Maintenance of Chain link fencing at Dzongkolumpa 500kVA Substation.

Sl.#	Description of item	Unit	Qty	Rate	Total
	Landslide Debris				
1	Clearing grass, removal of landslide debris & surface material including excavation & disposal within 50m lead	cu.m	12.96		
2	Excavation in foundation tranches or drains not exceeding 1.5m in width or area 10sq.m on plan, including dressing & ramming, disposal of surplus soil with in 50m lead & 1.5m lift-All types of soil	cu.m	4.52		
3	Providing and laying Hand packed stone filling or soiling with stones (Thickness-150mm)	cu.m	6.38		

BHUTAN POWER CORPORATION LTD. BPC TRONGSA BHUTAN

4	Providing and laying in position plain cement concret excluding cost of concreting and shuttering- All work upto plinth level -1:3:6 (1 cement, 3 sand, 6 graded crushed rock 20mm niminal size)	cu.m	6.94		
5	Proving & Fixing centering and shuttering (Formwork),including strutting,propping etc and removal of formwork foundation and plinth etc	sq.m	28.16		
6	Providing & Laying Random Rubble Masonry with	cu.m	5.06		
7	Steel work in single section including cutting,welding,hoisting fixing and applying primming coat of red lead paint and finishing with two or more coats of synthetic enamel paint- In Tees, angles, falts and channels	kg	232.24		
8	Supplying and spreading of stone aggregate 20mm on substation yard (Thickness-100mm)	cu.m	0.60		
9	Provinding and fixing of GI barbed wire netting including fixing of post or struts, G.I staples coal tarring in case of ballies complete (post,struts,earthwork, concrete paid separate)-2-5mm, (12SWG),4 bars form by twisting two points wires, each two turns,pitchof barbs 75mm	m	24.00		
10	Providing & fixing G.I chain-link mesh netting including, Welding, fixing of post struts, G.I staples (excluding the cost of (post,struts,earthwork, concrete etc) -4mm (8SWG)x 50MM Height 2m	sq.m	12.40		
	TOTAL - C				

D. Name of work : Construction of 250kVA Substation chain link fencing including Transformer and Pillar plinth near Dasho Dzongrab resident Lhaushong (8mx8m) Including site development works.

Sl #	Description	Unit	Qty	Rate	Amount
1	Earthwork in foundation trenches or drains not exceeding 1.5m in width or 10 sq.m in area on plan including dressing & ramming, disposal of surplus soil within all lead and lifts - All kinds of soil	cu.m	31.80		
2	Filling of trenches, sides of foundations etc. in layers <200mm using selected excavated earth, ramming etc. within lead 50 m & lift 1.5m	cu.m	7.60		
3	P/L in position plain cement concrete 1:3:6 ,20 mm aggregates, excluding the cost of centering & shuttering - All work upto plinth level.	cu.m	11.75		
4	P/F centering and shuttering (formwork) including strutting, propping etc. and removal of form work. - Foundation and plinth .	sq.m	19.59		
5	Providing & Laying Random Rubble Masonry with hard stone in foundation & plinth In cement mortar 1:4	cu.m	26.58		
6	Providing and laying hand packed stone soling or filling with stones	cu.m	13.77		

BHUTAN POWER CORPORATION LTD. BPC TRONGSA BHUTAN

7	1:4		18.24		
8	Steel work welded/rivited or bolted, in built up sections, In Tees, angles, flats and channels, trusses, frame works including cutting, hoisting, fixing and applying priming coat of red lead paint. - In Tubular sections. (Gate including all the components as shown in the drawing)	Kg	484.55		
9	Providing & applying finishing coats- Aluminium		18.88		
10	P/F GI chain link mesh including fixing of post or struts, GI staples (excluding the cost of post/struts, earthwork, concrete etc.) - 4mm (8 SWG) x 100mm	sq.m	64.00		
	Construction of plinth for 250kVA				
1	Earthwork in foundation trenches or drains not exceeding 1.5m in width or 10 sq.m in area on plan including dressing & ramming, disposal of surplus soil within all lead and lifts - All kinds of soil	cu.m	3.24		
2	Providing and laying hand packed stone soling or filling with stones	cu.m	0.32		
3	P/L in position plain cement concrete 1:3:6 ,20 mm aggregates, excluding the cost of centering & shuttering - All work upto plinth level.	cu.m	1.56		
4	P/F centering and shuttering (formwork) including strutting, propping etc. and removal of form work. - Foundation and plinth .	sq.m	3.28		
5	Providing & laying 12mm cement plaster in CM 1:4	sq.m	8.64		
6	Filling of trenches, sides of foundations etc. in layers <200mm using selected excavated earth, ramming etc. within lead 50 m & lift 1.5m	cu.m	0.38		
	TOTAL - D				
E. Name of work : DP pole base casting work along 33kV line at DHI project Samtsholing					
Sl #	**Description**	**Unit**	**Qty**	**Rate**	**Amount**
1	Earthwork in foundation trenches or drains not exceeding 1.5m in width or 10 sq.m in area on plan including dressing & ramming, disposal of surplus soil within all lead and lifts - All kinds of soil	cu.m	**40.00**		
2	Filling of trenches, sides of foundations etc. in layers <200mm using selected excavated earth, ramming etc. within lead 50 m & lift 1.5m	cu.m	**25.60**		
3	P/L in position plain cement concrete 1:3:6 ,20 mm aggregates, excluding the cost of centering & shuttering - All work upto plinth level.	cu.m	**51.36**		
4	P/F centering and shuttering (formwork) including strutting, propping etc. and removal of form work. - Foundation and plinth .	sq.m	**174.00**		
5	Providing and laying hand packed stone soling or filling with stones	cu.m	**5.40**		
	TOTAL - E				

BHUTAN POWER CORPORATION LTD. BPC TRONGSA : BHUTAN

F: Internal and Stair case wall Painting at Sherubling and Kewathang staff quarters ESD, Trongsa.					
Sl. No.	**Description of Items**	**Unit**	**Qty.**	**Rate (Nu.)**	**Amount (Nu.)**
	Providing and applying finishing coats (Sherabling)				
1	Vinyl plastic emulsion paint, for cement, masonry, plaster, two coats on new work	Sqm	346.01		
2	Providing and applying finishing coats with acrylic washable distemper, two coats on new/old work, including cement primer coat (Same color as the current one; must be confirmed with site engineer).	Sqm	1084.76		
3	Surface preparation removing by scraping, sand papering, including scratch repairs- Dry oil bound distemper	Sqm	1430.77		
	Providing and applying finishing coats (Kewathang quarters)				
1	Vinyl plastic emulsion paint, for cement, masonry, plaster, two coats on new work	Sqm	514.50		
2	Providing and applying finishing coats with acrylic washable distemper, two coats on new/old work, including cement primer coat (Same color as the current one; must be confirmed with site engineer).	Sqm	1666.49		
3	Surface preparation removing by scraping, sand papering, including scratch repairs- Dry oil bound distemper	Sqm	3093.84		
	TOTAL -F				
	Total 2 (A+B+C+D+E+F)				
				Grand Total for Package A (1+2)	
				Rebat offered (if any)	
				Final Bid Amount	

Final Bid Amount in words:

BHUTAN PETROLEUM CORPORATION LTD. BPC TRONGSA BHUTAN

Package A: Plan Works

BoQ - II

Package A: Plan Work, BoQ

A	LV line Extesion in and around Trongsa Dzogkhag				
	Description of Work	**Unit**	**Qty**	**Rate**	**Total Amount**
	RE- Fillin in and around Trongsa Dzongkhag				
I	Route survey, transportation of material (both headloading and vechular from stores to sites) testing, commissioning and other associated works including jungle clearance if required.				
1.1	Digging of holes, erection of 7.5/9 m poles and fittings, pole casting and other associated works.	No	55.00		
1.2	Digging of holes, erection of stay sets assembly (elbow, stay rod, clamp, plate, insulator & wire)	No	65.00		
1.3	Laying and stringing of LV ABC (2c/4c x 50sqmm) conductor including LV ABC fitting, jumpering, erection of deadend, suspension clamps & hook bolts and joints line and wherever necessary to complete the work.	km	4.00		
1.4	**Upgradtion of Banglapokto Substaion,HT line and LV ABC to 3 phase (Construction of 33/0.415 kV, 25 kVA Substation and 33kV line)**				
1.4.1	**Upgradation of Banglapokto 33kV single phase to three phase**				
a	Erection of Top Hamper assembly complete with M & U clamps, nuts, bolts and its accessories including painting.	Set	2.00		
b	Erection of 33 kV Pin insulator assembly	Set	2.00		
c	Erection of 33 kV Disc insulator assembly (1 set= 3 Nos)	Set	1.00		
d	Laying and Stringing of AAAC (One wire) , testing, commissioning and other associated works to complete works.	Km	0.202		
1.4.2	**Upgradation of Banglapokto Substation to 3 phase, 33/0.415kV, 25kVA**				
a	Installation of distribution transformer 33/0.415 kV, 63 kVA, transformer mounting platform, Substation crossarm assembly, Lighting arrester complete set with support,etc & DO fuse unit with support for DO fuse complete with clamps, nuts, etc..including painting , Distribution pillar, fittings, all accessories testing, commissioning and other associated works to complete the work	No	1.00		
b	Dismantling of 33/0.240, 10kVA substations & its fittings and accessories and transportation back to ESD store from site	No	1.00		
1.4.3	**Upgradation of LV ABC from 2 core 50 sq mm to 4c 50 sqmm**				
a	Dismantling of LV ABC(2x50sqmm) conductors & fittings and transportation back to ESD store from site and Dismantling of service cable & reconnecting	km	0.135		
b	Laying and stringing of LV ABC (4c x 50sqmm) conductor including LV ABC fitting, jumpering, erection of deadend, suspension clamps & hook bolts and joints line and wherever necessary to complete the work.	km	0.135		
	Total A				

BHUTAN POWER CORPORATION LTD. BPC TRONGSA BHUTAN

Package A: Plan Work, BoQ

B	Construction of 33kV line, 33/0.415kV, 25kVA substation and LV ABC at Kela Lingar				
	Description of Work	**Unit**	**Qty**	**Rate**	**Total Amount**
I	**Construction of 33 kV line, Three phase, Three Wire.**				
1	**Route survey, transportation of material (both headloading and vechular from stores to sites) testing, commissioning and other associated works including jungle clearance if required.**				
1.1	Digging of holes, erection of 10 mtr/telescopic, poles and fittings, spike earthing, danger plate, anticlimbing device, painting, pole casting and other associated works.	Nos	1.00		
1.2	Digging of holes, erection of stay sets assembly (elbow, stay rod, clamp, plate, insulator & wire) and other associated works	Nos	2.00		
1.3	Erection of Cross arm assembly H-frame O with complete clamps and its accessories including painting.	Set	1.00		
1.4	Erection of Cross brace assembly for H-frame with complete clamps and its accessories including painting.	Set	1.00		
1.5	Erection of 33 kV Pin insulator assembly	Set	3.00		
1.6	Erection of 33 kV Disc insulator assembly (1 set= 3 Nos)	Set	3.00		
1.7	Laying and Stringing of AAAC conductor (Three phase, Three wire), testing, commissioning and other associated works to complete works.	Km	0.10		
II	**Construction of 33/0.415 kV, 25 kVA Substation**				
1	**Route survey, transportation of material (both headloading and vechular from stores to sites) testing, commissioning and other associated works including jungle clearance if required.**				
1.1	Digging of holes, erection of 10 mtr, poles and fittings, spike earthing, danger plate, anticlimbing device, painting, pole casting and other associated works.	Nos	2.00		
1.2	Digging of holes, erection of stay sets assembly (elbow, stay rod, clamp, plate, insulator & wire)	Nos	2.00		
1.3	Installation of distribution transformer 33/0.415 kV, 25 kVA, transformer mounting platform, Substation crossarm assembly, Lighting Arrester complete set with support,etc & DO fuse unit with support for DO fuse complete with clamps, nuts, etc..including painting , Distribution pillar, fittings, all accessories testing, commissioning and other associated works to complete the work	No	1.00		
1.4	Erection of 33 kV Disc insulator assembly	Set	3.00		
1.5	Digging of , installation of GEE Slab earthing and ramming of back fill soil and termination of earthing conductor (GI Strip 25 x 6) construction of earthing and interconnection of earth points as per the drawing and termination of the earth conductor to the equipments. (15 No of GEE slab = 1 set)	Set			
a	Digging of hole for trench	per slab	15.00		
b	Laying of GEE Slab & covering of trench	per slab	15.00		
c	Welding for inter-connection of Slabs including concreting of G.I. Strip part	per slab	15.00		

BHUTAN ELECTRICITY AUTHORITY CORPORATION LTD. BPC RONGSA : BHUTAN

d	Earthing connection as required at Site	No	3.00		
III	**Construction of LV ABC from 2 core/4 cor 50 sqmm**				
1	Route survey, transportation of material (both headloading and vechular from stores to sites) testing, commissioning and other associated works including jungle clearance if required.				
1.1	Digging of holes, erection of 7.5/9 m poles and fittings, pole casting and other associated works.	No	7.00		
1.2	Digging of holes, erection of stay sets assembly (elbow, stay rod, clamp, plate, insulator & wire)	No	5.00		
1.3	Laying and stringing of LV ABC (2c/4cx50 sqmm) conductor including LV ABC fitting, jumpering,erection of deadend, suspension clamps & hook bolts and joints line wherever necessary to complete work.	km	0.60		
1.4	Dismantling of LV ABC (2 x 50 sqmm) conductors and fittings which is composite with HT line and transportation back to ESD store from site	km	0.50		
	Total B				
C	**Relocation of Hospital substation(Construction of 11kV line, 33/0.415kV, 250kVA substation and Construction of LV ABC**				
	Description of Work	**Unit**	**Qty**	**Rate**	**Total Amount**
I	**Construction of 11 kV line, Three phase, Three Wire.**				
1	Route survey, transportation of material (both headloading and vechular from stores to sites) testing, commissioning and other associated works including jungle clearance if required.				
1.1	Digging of holes, erection of 10 mtr/telescopic, poles and fittings, spike earthing, danger plate, anticlimbing device, painting, pole casting and other associated works.	Nos	3.00		
1.2	Digging of holes, erection of stay sets assembly (elbow, stay rod, clamp, plate, insulator & wire)	Nos	2.00		
1.3	Erection of Cross arm assembly H-frame O with complete clamps and its accessories including painting.	Set	3.00		
1.4	Erection of Cross brace assembly for H-frame with complete clamps and its accessories including painting.	Set	3.00		
1.5	Laying and Stringing of ACSR/Dog Rabbit conductor (Three phase, Three wire), testing, commissioning and other associated works to complete works.	km	0.15		
II	**Construction of 11/0.415 kV, 250 kVA Substation**				
1	Route survey, transportation of material (both headloading and vechular from stores to sites) testing, commissioning and other associated works including jungle clearance if required.				
1.1	Digging of holes, erection of 10 mtr, poles and fittings, spike earthing, danger plate, anticlimbing device, painting, pole casting and other associated works.	Nos	2.00		
1.2	Digging of holes, erection of stay sets assembly (elbow, stay rod, clamp, plate, insulator & wire)	Nos	2.00		

BHUTAN POWER CORPORATION LTD. BPC TRONGSA, BHUTAN

1.3	Installation of distribution transformer 33/0.415 kV, 63 kVA, transformer mounting platform, Substation crossarm assembly, Lighting arrester complete set with support,etc & DO fuse unit with support for DO fuse complete with clamps, nuts, etc..including painting , Distribution pillar, fittings, all accessories testing, commissioning and other associated works to complete the work	No	1.00		
1.4	Erection of 33 kV Disc insulator assembly	Set	3.00		
1.5	Digging of , installation of GEE Slab earthing and ramming of back fill soil and termination of earthing conductor (GI Strip 25 x 6) construction of earthing and interconnection of earth points as per the drawing and termination of the earth conductor to the equipments. (15 No of GEE slab = 1 set)	Set			
a	Digging of hole for trench	per slab	15.00		
b	Laying of GEE Slab & covering of trench	per slab	15.00		
c	Welding for inter-connection of Slabs including concreting of G.I. Strip part	per slab	15.00		
d	Earthing connection as required at Site	No	3.00		
1.6	Dismantling of 11/0.415, 250kVA substations & its fittings and accessories and transportation back to ESD store from site	No	1.00		
III	**Construction of LV ABC 2/4 core 50/95 sq mm**				
1	Route survey, transportation of material (both headloading and vechular from stores to sites) testing, commissioning and other associated works including jungle clearance if required.				
1.1	Digging of holes, erection of 7.5/9 m poles and fittings, pole casting and other associated works.	Nos	2.00		
1.2	Digging of holes, erection of stay sets assembly (elbow, stay rod, clamp, plate, insulator & wire)	No	2.00		
1.3	Laying and stringing of LV ABC (2core/4core 50/95 sqmm) conductor including LV ABC fitting, jumpering,erection of deadend, suspension clamps & hook bolts and joints line wherever necessary to complete work.	km	0.20		
	Total C				
D	**Rerouting/ shifting of 33kV Line which passes through dense forest to nearby road (Construction of 33kV line)**				
	Description of Work	**Unit**	**Qty**	**Rate**	**Total Amount**
I	**Construction of 33 kV line, Three phase, Three Wire.**				
1	Route survey, transportation of material (both headloading and vechular from stores to sites) testing, commissioning and other associated works including jungle clearance if required.				
1.1	Digging of holes, erection of 10 mtr/telescopic, poles and fittings, spike earthing, danger plate, anticlimbing device, painting, pole casting and other associated works.	Nos	74		
1.2	Digging of holes, erection of stay sets assembly (elbow, stay rod, clamp, plate, insulator & wire)	Nos	86		

BHUTAN POWER CORPORATION LTD. BPC TRONGSA, BHUTAN

1.3	Erection of Single pole cross arm assembly complete with M & U clamps, nuts, bolts and its accessories including painting.	Set	12		
1.4	Erection of Top Hamper assembly complete with M & U clamps, nuts, bolts and its accessories including painting.	Set	12		
1.5	Erection of Cross arm assembly H-frame O with complete clamps and its accessories including painting.	Set	37		
1.6	Erection of Cross brace assembly for H-frame with complete clamps and its accessories including painting.	Set	37		
1.7	Erection of 33 kV Pin insulator assembly	Set	129		
1.8	Erection of 33 kV Disc insulator assembly (1 set= 3 Nos)	Set	168		
1.9	Laying and Stringing of ACSR Rabbit/Dog conductor (Three phase, Three wire),testing, commissioning and other associated works to complete works.	Km	3.700		
	Total D				
E	**Up-gradation of Lines and subsations at Thagnil and upgrade existing 33/0.240 kV, 10 kVA to 63 kVA, 3 phase.**				
	Description of Work	**Unit**	**Qty**	**Rate**	**Total Amount**
I	**Upgradation of Thagnil 33kV single phase to three phase**				
1	Route survey, transportation of material (both headloading and vechular from stores to sites) testing, commissioning and other associated works including jungle clearance if required.				
1.1	Erection of Single pole cross arm assembly complete with M & U clamps, nuts, bolts and its accessories including painting.	Set	1.00		
1.2	Erection of Top Hamper assembly complete with M & U clamps, nuts, bolts and its accessories including painting.	Set	1.00		
1.3	Erection of 33 kV Pin insulator assembly	Set	3.00		
1.4	Erection of 33 kV Disc insulator assembly (1 set= 3 Nos)	Set	6.00		
1.5	Laying and Stringing of ACSR Rabbit/Dog conductor (One wire), testing, commissioning and other associated works to complete works.	Km	0.50		
II	**Upgradation of single phase substaion to 3 phase (Construction of 33/0.415 kV, 63 kVA Substation)**				
1	Route survey, transportation of material (both headloading and vechular from stores to sites) testing, commissioning and other associated works including jungle clearance if required.				
1.1	Installation of distribution transformer 33/0.415 kV, 63 kVA, Lighting arrester complete set with support,etc & DO fuse unit with support for DO fuse complete with clamps, nuts, etc..including painting , Distribution pillar, fittings, all accessories testing, commissioning and other associated works to complete the work	Nos	1.00		
1.2	Erection of 33 kV Disc insulator assembly (1 set= 3 Nos)	Set	1.00		

1.3	Dismantling of 33/0.240, 10kVA substations & its fittings and accessories and transportation back to ESD store from site	No	1.00		
III	**Upgradation of LV ABC from 2 core 50 sq mm to 4c 50 sqmm**				
1	Route survey, transportation of material (both headloading and vechular from stores to sites) testing, commissioning and other associated works including jungle clearance if required.				
1.1	Digging of holes, erection of 7.5/9 m poles and fittings, pole casting and other associated works.	Nos	2.00		
1.2	Digging of holes, erection of stay sets assembly (elbow, stay rod, clamp, plate, insulator & wire)	No	2.00		
1.3	Dismantling of LV ABC(2x50sqmm) conductors & fittings and transportation back to ESD store from site & and Dismantling of service cable & reconnecting	km	0.60		
1.4	Laying and stringing of LV ABC (4c x 50sqmm) conductor including LV ABC fitting, jumpering, erection of deadend, suspension clamps & hook bolts and joints line and wherever necessary to complete the work.	km	0.60		
	Total E				
F	**Up-gradation of LV Lines and subsations at Threspang and upgrade existing 33/0.240 kV, 10 kVA to 63 kVA, 3 phase.**				
	Description of Works	**Unit**	**Qty**	**Rate**	**Total Amount**
I	**Construction of 33kV line**				
1	Route survey, transportation of material (both headloading and vechular from stores to sites) testing, commissioning and other associated works including jungle clearance if required.				
1.1	Digging of holes, erection of 10 mtr/telescopic, poles and fittings, spike earthing, danger plate, anticlimbing device, painting, pole casting and other associated works.	Nos	3.00		
1.2	Digging of holes, erection of stay sets assembly (elbow, stay rod, clamp, plate, insulator & wire)	Nos	2.00		
1.3	Erection of Single pole cross arm assembly complete with M & U clamps, nuts, bolts and its accessories including painting.	Set	1.00		
1.4	Erection of Top Hamper assembly complete with M & U clamps, nuts, bolts and its accessories including painting.	Set	1.00		
1.5	Erection of Cross arm assembly H-frame O with complete clamps and its accessories including painting.	Set	2.00		
1.6	Erection of Cross brace assembly for H-frame with complete clamps and its accessories including painting.	Set	2.00		
1.7	Erection of 33 kV Pin insulator assembly	Set	3.00		
1.8	Erection of 33 kV Disc insulator assembly (1 set= 3 Nos)	Set	3.00		
1.9	Laying and Stringing of ACSR Rabbit/Dog conductor (Three phase, Three wire),testing, commissioning and other associated works to complete works.	Km	0.15		

BHUTAN POWER CORPORATION LTD. BPC TRONGSA : BHUTAN

Package A: Plan Work, BoQ

II	**Upgradation of single phase substaion to 3 phase (Construction of 33/0.415 kV, 63 kVA Substation)**				
1	Route survey, transportation of material (both headloading and vechular from stores to sites) testing, commissioning and other associated works including jungle clearance if required.				
1.1	Digging of holes, erection of 10 mtr, poles and fittings, spike earthing, danger plate, anticlimbing device, painting, pole casting and other associated works.	Nos	2.00		
1.2	Digging of holes, erection of stay sets assembly (elbow, stay rod, clamp, plate, insulator & wire)	Nos	2.00		
1.3	Installation of distribution transformer 33/0.415 kV, 63 kVA, transformer mounting platform, Substation crossarm assembly, Lighting Arrester complete set with support,etc & DO fuse unit with support for DO fuse complete with clamps, nuts, etc..including painting , Distribution pillar, fittings, all accessories testing, commissioning and other associated works to complete the work	Nos	1.00		
1.4	Erection of 33 kV Disc insulator assembly (1 set= 3 Nos)	Set	3.00		
1.5	Digging of , installation of GEE Slab earthing and ramming of back fill soil and termination of earthing conductor (GI Strip 25 x 6) construction of earthing and interconnection of earth points as per the drawing and termination of the earth conductor to the equipments. (15 No of GEE slab = 1 set)	Set			
a	Digging of hole for trench	per slab	15.00		
b	Laying of GEE Slab & covering of trench	per slab	15.00		
c	Welding for inter-connection of Slabs including concreting of G.I. Strip part	per slab	15.00		
d	Earthing connection as required at Site	No	3.00		
1.6	Dismantling of 33/0.240, 10kVA substations & its fittings and accessories and transportation back to ESD store from site				
III	**Upgradation of LV ABC from 2 core 50 sq mm to 4c 50 sqmm**				
1	Route survey, transportation of material (both headloading and vechular from stores to sites) testing, commissioning and other associated works including jungle clearance if required.				
1.1	Digging of holes, erection of 7.5/9 m poles and fittings, pole casting and other associated works.	Nos	2.00		
1.2	Digging of holes, erection of stay sets assembly (elbow, stay rod, clamp, plate, insulator & wire)	No	2.00		
1.3	Dismantling of LV ABC(2x50sqmm) conductors & fittings and transportation back to ESD store from site & re-stringing of LV ABC, 3phase (4x50sqmm) and Dismantling of service cable & reconnecting	km	0.31		

BHUTAN POWER CORPORATION LTD. BPC TRONGSA : BHUTAN

1.4	Laying and stringing of LV ABC (4c x 50sqmm) conductor including LV ABC fitting, jumpering, erection of deadend, suspension clamps & hook bolts and joints line and wherever necessary to complete the work.	km	0.31		
	Total F				
G	**Relocation of Chakarzur substation**				
	Description of Works	**Unit**	**Qty**	**Rate**	**Total Amount**
I	**Construction of 33 kV line, Three phase, Three Wire.**				
1	Route survey, transportation of material (both headloading and vechular from stores to sites) testing, commissioning and other associated works including jungle clearance if required.				
1.1	Digging of holes, erection of 10 mtr/telescopic, poles and fittings, spike earthing, danger plate, anticlimbing device, painting, pole casting and other associated works.	Nos	4		
1.2	Digging of holes, erection of stay sets assembly (elbow, stay rod, clamp, plate, insulator & wire)	Nos	4		
1.3	Erection of Single pole cross arm assembly complete with M & U clamps, nuts, bolts and its accessories including painting.	Set	1		
1.4	Erection of Top Hamper assembly complete with M & U clamps, nuts, bolts and its accessories including painting.	Set	1		
1.5	Erection of Cross arm assembly H-frame O with complete clamps and its accessories including painting.	Set	3		
1.6	Erection of Cross brace assembly for H-frame with complete clamps and its accessories including painting.	Set	3		
1.7	Erection of 33 kV Pin insulator assembly	Set	6		
1.8	Erection of 33 kV Disc insulator assembly (1 set= 3 Nos)	Set	9		
1.9	Laying and Stringing of ACSR Rabbit/Dog conductor (Three phase, Three wire), testing, commissioning and other associated works to complete works.	Km	0.150		
II	**Construction of 33/0.415 kV, 63 kVA Substation**				
1	Route survey, transportation of material (both headloading and vechular from stores to sites) testing, commissioning and other associated works including jungle clearance if required.				
1.1	Digging of holes, erection of 10 mtr, poles and fittings, spike earthing, danger plate, anticlimbing device, painting, pole casting and other associated works.	Nos	2.00		
1.2	Digging of holes, erection of stay sets assembly (elbow, stay rod, clamp, plate, insulator & wire)	Nos	2.00		
1.3	Installation of distribution transformer 33/0.415 kV, 63 kVA, transformer mounting platform, Substation crossarm assembly, Lighting Arrester complete set with support,etc & DO fuse unit with support for DO fuse complete with clamps, nuts, etc..including painting , Distribution pillar, fittings, all accessories testing, commissioning and other associated works to complete the work	No	1.00		

1.4	Erection of 33 kV Disc insulator assembly	Set	3.00		
1.5	Digging of , installation of GEE Slab earthing and ramming of back fill soil and termination of earthing conductor (GI Strip 25 x 6) construction of earthing and interconnection of earth points as per the drawing and termination of the earth conductor to the equipments. (15 No of GEE slab = 1 set)	Set			
a	Digging of hole for trench	per slab	15.00		
b	Laying of GEE Slab & covering of trench	per slab	15.00		
c	Welding for inter-connection of Slabs including concreting of G.I. Strip part	per slab	15.00		
d	Earthing connection as required at Site	No	3.00		
1.6	Dismantling of 33/0415, 63kVA substations & its fittings and accessories and transportation back to ESD store from site	No	1.00		
III	**Construction of LV ABC 2/4 core 50 sq mm**				
1	Route survey, transportation of material (both headloading and vechular from stores to sites) testing, commissioning and other associated works including jungle clearance if required.				
1.1	Digging of holes, erection of 7.5/9 m poles and fittings, pole casting and other associated works.	Nos	2.00		
1.2	Digging of holes, erection of stay sets assembly (elbow, stay rod, clamp, plate, insulator & wire)	No	2.00		
1.3	Laying and stringing of LV ABC (2c/4c x 50sqmm) conductor including LV ABC fitting, jumpering, erection of deadend, suspension clamps & hook bolts and joints line and wherever necessary to complete the work.	km	0.05		
	Total G				
H	**Relocation and upgradation of Kuengarabten substation from 63kVA to 125kVA**				
	Description of Works	**Unit**	**Qty**	**Rate**	**Total Amount**
I	**Construction of 33 kV line, Three phase, Three Wire.**				
1	Route survey, transportation of material (both headloading and vechular from stores to sites) testing, commissioning and other associated works including jungle clearance if required.				
1.1	Digging of holes, erection of 10 mtr/telescopic, poles and fittings, spike earthing, danger plate, anticlimbing device, painting, pole casting and other associated works.	Nos	2		
1.2	Digging of holes, erection of stay sets assembly (elbow, stay rod, clamp, plate, insulator & wire)	Nos	3		
1.3	Erection of Cross arm assembly H-frame O with complete clamps and its accessories including painting.	Set	1		
1.4	Erection of Cross brace assembly for H-frame with complete clamps and its accessories including painting.	Set	1		
1.5	Erection of 33 kV Pin insulator assembly	Set	3		
1.6	Erection of 33 kV Disc insulator assembly (1 set= 3 Nos)	Set	6		
1.7	Laying and Stringing of ACSR Rabbit/Dog conductor (Three phase, Three wire),testing, commissioning and other associated works to complete works.	Km	0.100		

Package A: Plan Work, BoQ

II	**Construction of 33/0.415 kV, 125 kVA Substation**				
	Description of Works	**Unit**	**Qty**	**Rate**	**Total Amount**
1	Route survey, transportation of material (both headloading and vechular from stores to sites) testing, commissioning and other associated works including jungle clearance if required.				
1.1	Digging of holes, erection of 10 mtr, poles and fittings, spike earthing, danger plate, anticlimbing device, painting, pole casting and other associated works.	Nos	2.00		
1.2	Digging of holes, erection of stay sets assembly (elbow, stay rod, clamp, plate, insulator & wire)	Nos	2.00		
1.3	Installation of distribution transformer 33/0.415 kV, 63 kVA, transformer mounting platform, Substation crossarm assembly, Lighting arrester complete set with support,etc & DO fuse unit with support for DO fuse complete with clamps, nuts, etc..including painting , Distribution pillar, fittings, all accessories testing, commissioning and other associated works to complete the work	Nos	1.00		
1.4	Erection of 33 kV Disc insulator assembly	Set	3.00		
1.5	Digging of , installation of GEE Slab earthing and ramming of back fill soil and termination of earthing conductor (GI Strip 25 x 6) construction of earthing and interconnection of earth points as per the drawing and termination of the earth conductor to the equipments. (15 No of GEE slab = 1 set)	Set			
a	Digging of hole for trench	per slab	15.00		
b	Laying of GEE Slab & covering of trench	per slab	15.00		
c	Welding for inter-connection of Slabs including concreting of G.I. Strip part	per slab	15.00		
d	Earthing connection as required at Site	No	3.00		
1.6	Dismantling of 33/0.415, 63kVA substations & its fittings and accessories and transportation back to ESD store from site	No	1		
III	**Construction of LV ABC 2/4 core 50 sq mm**				
	Description of works	**Unit**	**Qty**	**Rate**	**Total Amount**
1	Route survey, transportation of material (both headloading and vechular from stores to sites) testing, commissioning and other associated works including jungle clearance if required.				
1.1	Digging of holes, erection of 7.5/9 m poles and fittings, pole casting and other associated works.	Nos	2.00		
1.1	Digging of holes, erection of stay sets assembly (elbow, stay rod, clamp, plate, insulator & wire)	No	2.00		
1.3	Laying and stringing of LV ABC (2c/4c x 50sqmm) conductor including LV ABC fitting, jumpering, erection of deadend, suspension clamps & hook bolts and joints line and wherever necessary to complete the work.	km	0.15		
	Total H				

Package A: Plan Work, BoQ

I	**Up-gradation of 4Cx50sqmm. LV ABC to 95sqmm. LV ABC**				
I	**Descriptionof Works**	**Unit**	**Qty**	**Rate**	**Total Amount**
1	Route survey, transportation of material (both headloading and vechular from stores to sites) testing, commissioning and other associated works including jungle clearance if required.				
1.1	Digging of holes, erection of 7.5/9 m poles and fittings, pole casting and other associated works.	No	5		
1.2	Digging of holes, erection of stay sets assembly (elbow, stay rod, clamp, plate, insulator & wire)	No	4		
1.1	Laying and stringing of LV ABC (4c x 95sqmm) conductor including LV ABC fitting, jumpering, erection of deadend, suspension clamps & hook bolts and joints line and wherever necessary to complete the work.	km	1.90		
1.2	Dismantling of LV ABC (4cx50sqmm) conductors and fittings and transportation back to ESD store from site & Dismantling of service cable and reconnecting	km	1.90		
	Total I				
J	**Replacement of 250kVA by 125kVA near Taktse Central School**				
	Description of Works	**Unit**	**Qty**	**Rate**	**Total Amount**
I	**Construction of 33/0.415 kV, 125 kVA Substation**				
1	Route survey, transportation of material (both headloading and vechular from stores to sites) testing, commissioning and other associated works including jungle clearance if required.				
1.1	Digging of holes, erection of 10 mtr, poles and fittings, spike earthing, danger plate, anticlimbing device, painting, pole casting and other associated works.	Nos	2		
1.2	Digging of holes, erection of stay sets assembly (elbow, stay rod, clamp, plate, insulator & wire)	Nos	2		
1.3	Installation of distribution transformer 33/0.415 kV, 125 kVA, transformer mounting platform, Substation crossarm assembly, Lighting arrester complete set with support,etc & DO fuse unit with support for DO fuse complete with clamps, nuts, etc..including painting , Distribution pillar, fittings, all accessories testing, commissioning and other associated works to complete the work	Nos	1		
1.4	Erection of 33 kV Disc insulator assembly	Set	3		
1.5	Digging of , installation of GEE Slab earthing and ramming of back fill soil and termination of earthing conductor (GI Strip 25 x 6) construction of earthing and interconnection of earth points as per the drawing and termination of the earth conductor to the equipments. (15 No of GEE slab = 1 set)	Set			
a	Digging of hole for trench	per slab	15		
b	Laying of GEE Slab & covering of trench	per slab	15		
c	Welding for inter-connection of Slabs including concreting of G.I. Strip part	per slab	15		
d	Earthing connection as required at Site	No	3		

1.6	Dismantling of 33/0415, 63kVA substations & its fittings and accessories and transportation back to ESD store from site	No	1		
1.7	Dismantling of Double MV poles and fixtures & accessories and transportation back to ESD store from site	No	1		
1.8	Dismantling of ACSR dog counductors fittings & rolling and its accessories and transportation back to ESD store from site	km	0.08		
II	**Construction of LV ABC 2/4 core 50 sq mm**				
	Description of Works	**Unit**	**Qty**	**Rate**	**Total Amount**
1	Route survey, transportation of material (both headloading and vechular from stores to sites) testing, commissioning and other associated works including jungle clearance if required.				
1.1	Digging of holes, erection of 7.5/9 m poles and fittings, pole casting and other associated works.	Nos	1.00		
1.1	Digging of holes, erection of stay sets assembly (elbow, stay rod, clamp, plate, insulator & wire)	No	2.00		
1.3	Laying and stringing of LV ABC (2c/4c x 50sqmm) conductor including LV ABC fitting, jumpering, erection of deadend, suspension clamps & hook bolts and joints line and wherever necessary to complete the work.	km	0.10		
	Total J				
K	**Replacing of 33kV Rab conductor with AAAC at 400kV line crossing at Rewatala. (0.250 Km).**				
	Description of works	**Unit**	**Qty**	**Rate**	**Total Amount**
I	**Construction of 33 kV line, Three phase, Three Wire.**				
1	Route survey, transportation of material (both headloading and vechular from stores to sites) testing, commissioning and other associated works including jungle clearance if required.				
1.1	Dismantling of ACSR dog counductors and fitting conductor & rolling and its accessories and transportation back to ESD store from site	km	0.250		
1.2	Laying and Stringing of AAAC conductor (Three phase, Three wire), including erection of pin insulators, disc insulators,testing, commissioning and other associated works to complete the works.	km	0.250		
	Total K				
L	**Installation of 33kV LBS and 11kV LBS (In and around Trongsa Dzonghag)**				
	Description of Works	**Unit**	**Qty**	**Rate**	**Total Amount**
I	**Installation of 29 no of 33kV LBS at Takste feeder, semji feede, and Langthel feeder**				
1	Route survey, transportation of material (both headloading and vechular from stores to sites) testing, commissioning and other associated works including jungle clearance if required.				
1.1	Digging of holes, erection of 10 mtr/telescopic, poles and fittings, spike earthing, danger plate, anticlimbing device, painting, pole casting and other associated works.	Nos	31		

Package A: Plan Work, BoQ

1.2	Digging of holes, erection of stay sets assembly (elbow, stay rod, clamp, plate, insulator & wire)	Nos	52		
1.3	Erection of substation cross arm assembly complete with M&U clamps, nuts, bolts and its accessories including painting. Inlcuding transportation from ESD store to site	set	29		
1.4	Erection of 33 kV Disc insulator assembly (1 set= 3 Nos)	Set	96		
1.5	Erection/installation of LBS with complete accessories with fittings , ABS supports, handle support channel, etc and other associated work complete the work	Set	29.00		
1.6	Dismantling of Double pole MV poles and fixtures & accessories and transportation back to ESD store from site	set	10.00		
1.7	Dismantling of ACSR Rabbit/Dog conductors fitting & rolling and its accessories and Re-stringing of ACSR Rabbit/Dog conductors after installation of LBS and other associated works to complete the work	km	2.04		
II	**Installation of 2 no of 11kV LBS at Trongsa feeder**				
1	Route survey, transportation of material (both headloading and vechular from stores to sites) testing, commissioning and other associated works including jungle clearance if required.				
1.1	Digging of holes, erection of 10 mtr/telescopic, poles and fittings, spike earthing, danger plate, anticlimbing device, painting, pole casting and other associated works.	Nos	2		
1.2	Digging of holes, erection of stay sets assembly (elbow, stay rod, clamp, plate, insulator & wire)	Nos	2		
1.3	Erection of substation cross arm assembly complete with M&U clamps, nuts, bolts and its accessories including painting. Inlcuding transportation from ESD store to site	set	2		
1.4	Erection of 33 kV Disc insulator assembly (1 set= 3 Nos)	Set	6		
1.5	Erection/installation of LBS with complete accessories with fittings , ABS supports, handle support channel, etc and other associated work complete the work	Set	2.00		
1.6	Dismantling of Double pole MV poles and fixtures & accessories and transportation back to ESD store from site	set	2.00		
1.7	Dismantling of ACSR Rabbit/Dog conductors fitting & rolling and its accessories and Re-stringing of ACSR Rabbit/Dog conductors after installation of LBS and other associated works to complete the work	set	0.10		
	Total L				

Package A: Plan Work, BoQ

M	**Conversion of 33kV line to 11kV line from willing to Yangkil Resort via Druk Willing resort (0.140km) and conversion of 2 no of 33/0.415kV transformer to 11/0.415kV, 250kVA and 500kVA at Yangkil and Willing respectively.**				
	Description of Work	**Unit**	**Qty**	**Rate**	**Total Amount**
I	**Conversion of 11kV line to 33kV line towards Taphi goenpa**				
1	Route survey, transportation of material (both headloading and vechular from stores to sites) testing, commissioning and other associated works including jungle clearance if required.				
1.1	Erection of 33 kV Pin insulator assembly	Set	93.00		
1.2	Erection of 33 kV Disc insulator assembly (1 set= 3 Nos)	Set	72.00		
1.3	Laying and Stringing of 33kV ACSR Rabbit/Dog conductor (Three phase, Three wire) , testing, commissioning and other associated works to complete works.	Km	2.167		
1.4	Laying and Stringing of 11kV ACSR Rabbit/conductor (Three phase, Three wire) 50 sqmm, testing, commissioning and other associated works to complete works.	km	0.080		
1.5	Dismantling of 11kV conductors and rollings and its fittings and accessories and transportation back to ESD store from site	km	2.176		
1.6	Dismantling of 33kV conductors and rollings and its fittings and accessories and transportation back to ESD store from site	km	0.111		
	Total I				
II	**Conversion of 33/0.415kV transformer to 11/0.415kV, 250kVA at Yangkil resort**				
1	**Route survey, transportation of material (both headloading and vechular from stores to sites) testing, commissioning and other associated works including jungle clearance if required.**				
1.1	Installation distribution transformer 11/0.415 kV, 250 kVA and Lighting Arrester complete set with support,etc & DO fuse unit with support for DO fuse complete with clamps, nuts, etc., erection of distribution pillar, including painting, fitting all accessories, testing, commissioning and other associated works.	Nos	1.00		
1.2	Dismantling of 33/0.415, 250kVA substations & its fittings and accessories and transportation back to ESD store from site	No	1.00		
III	**Conversion of 33/0.415kV transformer to 11/0.415kV, 500kVA at Druk Willing Resort**				
1	Route survey, transportation of material (both headloading and vechular from stores to sites) testing, commissioning and other associated works including jungle clearance if required.				

Package A: Plan Work, BoQ

1.1	Installation distribution transformer 11/0.415 kV, 500 kVA and Lighting arrester complete set with support,etc & DO fuse unit with support for DO fuse complete with clamps, nuts, etc..including painting, fitting all accessories, testing, commissioning and other associated works.	Nos	1.00		
1.2	Dismantling of 33/0.415, 500kVA substations & its fittings and accessories and transportation back to ESD store from site	Nos	1.00		
1V	**Conversion of 2 no of 11/0.415 to 33/0.415kV, 25kVA substation at Taphi goenpa and Tapha Dubai gatshel (Below Taphi goenpa)**				
1	Route survey, transportation of material (both headloading and vechular from stores to sites) testing, commissioning and other associated works including jungle clearance if required.				
1.1	Installation distribution transformer 33/0.415 kV, 25 kVA and Lighting arrester complete set with support,etc & DO fuse unit with support for DO fuse complete with clamps, nuts, etc..including painting, fitting all accessories, testing, commissioning and other associated works.	Nos	2.00		
1.2	Dismantling of 11/0.415, 25kVA substations & its fittings and accessories and transportation back to ESD store from site	Nos	2.00		
V	**Shifting of 11/0.415kVA Yulling substation**				
1	Route survey, transportation of material (both headloading and vechular from stores to sites) testing, commissioning and other associated works including jungle clearance if required.				
1.1	Digging of holes, erection of 10 mtr, poles and fittings, spike earthing, danger plate, anticlimbing device, painting, pole casting and other associated works.	Nos	2.00		
1.2	Digging of holes, erection of stay sets assembly (elbow, stay rod, clamp, plate, insulator & wire)	Nos	2.00		
1.3	Installation of distribution transformer 33/0.415 kV, 63 kVA, transformer mounting platform, Substation crossarm assembly, Lighting arrester complete set with support,etc & DO fuse unit with support for DO fuse complete with clamps, nuts, etc..including painting , Distribution pillar, fittings, all accessories testing, commissioning and other associated works to complete the work	Nos	1.00		
1.4	Digging of , installation of GEE Slab earthing and ramming of back fill soil and termination of earthing conductor (GI Strip 25 x 6) construction of earthing and interconnection of earth points as per the drawing and termination of the earth conductor to the equipments. (15 No of GEE slab = 1 set)	Set			
a	Digging of hole for trench	per slab	15.00		
b	Laying of GEE Slab & covering of trench	per slab	15.00		
c	Welding for inter-connection of Slabs including concreting of G.I. Strip part	per slab	15.00		

Package A: Plan Work, BoQ

d	Earthing connection as required at Site	No	3.00		
1.5	Dismantling of 11/0.415, 63kVA substations & its fittings and accessories and transportation back to ESD store from site	No	1.00		
	Total M				

Grand Total for Package B (A+B+C+D+E+F+G+H+I+J+K+L+M)	
Rebat offered (if any)	
Final Bid Amount	

Final Bid Amount in words:

SECTION IV – GENERAL CONDITION OF CONTRACT

BHUTAN PRINTER CORPORATION LTD.
BPC
TRONGSA BHUTAN

1.1 SECTION IV – GENERAL CONDITIONS OF CONTRACT

TABLE OF CONTENTS

1. GENERAL PROVISIONS 5
   - 1.1. DEFINITIONS 5
   - 1.2. INTERPRETATION 7
   - 1.3. NOTICES 8
   - 1.4. GOVERNING LAW AND LANGUAGE 9
   - 1.5. ASSIGNMENT 9
   - 1.6. FRAUD AND CORRUPTION 9
   - 1.7. JOINT VENTURE 10
2. THE EMPLOYER 10
   - 2.1. ACCESS TO SITE 10
   - 2.2. EMPLOYER REPRESENTATIVE 11
   - 2.3. EMPLOYER'S RESPONSIBILITIES 12
3. THE CONTRACTOR 12
   - 3.1. RESPONSIBILITY OF THE CONTRACTOR 12
   - 3.2. PERFORMANCE SECURITY 13
   - 3.3. CONTRACTOR'S REPRESENTATIVE AND CONSTRUCTION MANAGER 14
   - 3.4. OPPORTUNITIES FOR OTHER CONTRACTORS 15
   - 3.5. EMERGENCY WORK 16
   - 3.6. PROGRESS REVIEW MEETINGS 16
   - 3.7. PROTECTION OF THE ENVIRONMENT 16
   - 3.8. SITE REGULATIONS AND SAFETY 17
   - 3.9. SITE CLEARANCE 17
   - 3.10. WATCHING AND LIGHTING 17
   - 3.11. EXPLOSIVES 17
   - 3.12. TEMPORARY UTILITIES 17
   - 3.13. WORKING HOURS 18
   - 3.14. PROGRAM OF PERFORMANCE 18
   - 3.15. PROGRESS OF PERFORMANCE 18
4. SUBCONTRACTING 18
5. CONTRACTOR'S STAFF/LABOUR AND EQUIPMENT 19
   - 5.1. KEY PERSONNEL 19
   - 5.2. LABOUR 19
   - 5.3. CONTRACTOR'S EQUIPMENT 21
6. PLANT, MATERIAL AND WORKMANSHIP 21
   - 6.1. METHODOLOGY OF CONSTRUCTION & EQUIPMENT MOBILIZATION 21
   - 6.2. TEST AND INSPECTION 21
7. WORK EXECUTION 23
   - 7.1. BENCHMARK 23
   - 7.2. CONTRACTOR'S SUPERVISION 23
   - 7.3. QUALITY ASSURANCE PROGRAM 23
   - 7.4. PROGRESS REPORT 23
   - 7.5. MATERIALS OBTAINED FROM EXCAVATION 24
8. COMMENCEMENT, DELAYS AND SUSPENSION 24

dhi
Druk Holding & Investments Ltd

8.1. TIME FOR COMMENCEMENT AND COMPLETION 24
8.2. MANNER OF EXECUTION 24
8.3. EXTENSION OF TIME FOR COMPLETION 25
8.4. LIQUIDATED DAMAGES 26

9. TAKING OVER 26

9.1. TEST ON COMPLETION 26
9.2. TAKING OVER OF WORKS 27
9.3. OPERATING AND MAINTENANCE MANUALS 28

10. DEFECTS 28

10.1. CORRECTION OF DEFECTS 28
10.2. UNCORRECTED DEFECTS 28
10.3. DEFECT LIABILITY 29

11. MEASUREMENT AND VALUATION 30

12. VARIATIONS AND ADJUSTMENTS 30

12.1. CONTRACT PRICE ADJUSTMENT 30
12.2. CHANGE IN WORKS 32
12.3. VARIATIONS IN CONTRACT 33
12.4. ADJUSTMENT OF THE CONTRACT PRICE 33
12.5. DAY WORK 35
12.6. RECORD OF COSTS 35
12.7. CHANGE IN LAWS AND REGULATIONS 35

13. CONTRACT PRICE AND PAYMENT 36

13.1. CONTRACT PRICE 36
13.2. ADVANCE PAYMENT 36
13.3. TERMS OF PAYMENT 37
13.4. TAXES AND DUTIES 38
13.5. RETENTION MONEY 38

14. TERMINATION 39

14.1. TERMINATION FOR EMPLOYER'S CONVENIENCE 39
14.2. TERMINATION FOR CONTRACTOR'S DEFAULT 39
14.3. TERMINATION BY CONTRACTOR 41
14.4. PAYMENT UPON TERMINATION 42
14.5. SUSPENSION 42

15. CARE OF THE WORKS AND INDEMNITIES 43

15.1. PROTECTION OF WORKS 43
15.2. COPYRIGHT 44
15.3. CONFIDENTIAL INFORMATION 44
15.4. PATENT INDEMNITY 45
15.5. LIMITATIONS OF LIABILITY 45
15.6. INDEMNIFICATION EMPLOYER 46

16. EXCEPTIONAL EVENT (FORCE MAJEURE) 47

17. INSURANCE 48

18. CLAIMS 49

18.1. CONTRACTOR'S CLAIMS 49

18.2. CLAIMS TOWARDS IDLING OF RESOURCES 50
18.3. EARLY WARNING 51

19. DISPUTES AND ARBITRATIONS 51

19.1. AMICABLE SETTLEMENT 51
19.2. DISPUTE RESOLUTION 51

1. General Provisions

1.1. Definitions

1.1.1. The following words and expressions shall have the meaning hereby assigned to them except where the context otherwise requires.

(i) Affiliate means business concerns, organizations or individuals that control each other or that are controlled by a common third party. Control may include shared management or ownership; common use of facilities, equipment and resources; or family interests.

(ii) Employer means the Employer including its legal successors and permitted assigns. The term "Employer" and "Employer" are synonymous.

(iii) Bid means an offer to execute Works in accordance with the terms and conditions set out in the bidding documents inviting such offers. The term "tender" is synonymous with the term "bid".

(iv) Bid Data Sheet (BDS) means the proforma sheet, which contains data and information specific to a particular work.

(v) Bidder means an eligible individual, firm, legal entity or joint venture that participates in a competitive bidding process governed by the bidding documents.

(vi) Bidding Document means the set of documents sold or issued by Employer to potential Bidders in which the specifications, terms and conditions of the proposed procurement are prescribed. The terms "Bidding Documents", "Tender Documents" and "Bid Documents" are synonymous.

(vii) Bill of Quantities (BoQ) means summary of the quantities and unit prices of the items of work proposed and agreed under the contract.

(viii) Contract means formal agreement(s) in writing entered into simultaneously between Employer and the Contractor on mutually agreed terms and conditions including the Contract Documents and amendments thereto pursuant to Notification of Award issued by Employer and accepted by the Contractor and which are in compliance with all the relevant provisions of the Governing Law of the Contract as per GCC 1.4.

(ix) Contract Document means the documents referred in Contract Agreement.

(x) Contract Price means the price payable to the Contractor as specified in the Contract Agreement, subject to such additions and adjustments thereto or deductions therefrom as may be made pursuant to the provisions of the Contract till the completion of the contract, the price so adjusted shall be termed as executed/final Contract Price.

(xi) Contractor means an individual or legal entity whose Bid to perform the Contract has been accepted by Employer and is named as such in the Contract Agreement, and includes the legal successors or permitted assigns of the Contractor.

(xii) Contractor's Representative means any person nominated by the Contractor and approved by Employer in the manner provided in GCC 3.3 hereof to perform the duties assigned by the Contractor.

(xiii) Contractor's Equipment means all plant, facilities, equipment, machinery, tools, apparatus, appliances or things of every kind required for erection, completion and maintenance of works that are to be provided by the Contractor, but does not

include plant, equipment, materials or other things intended to form or forming part of the works.

(xiv) Day means calendar day of the Gregorian calendar.

(xv) Day works are varied work inputs subject to payment on a time basis for the Contractor's employees and Equipment, in addition to payments for associated Materials andPlant.

(xvi) Defect Liability Period means the period of validity of the warranties given by the Contractor commencing at completion of the Works or a part thereof, if separate completion of the Works for such part has been provided in the Contract, during which the Contractor is responsible for defects with respect to the Works (or the relevant part thereof) as provided in GCC10.3hereof.

(xvii) The Defects Liability Certificate is the certificate issued by the Employer upon correction of defects by theContractor.

(xviii) Drawings include calculations and other information provided orapprovedbytheEmployerfortheexecutionoftheContract.

(xix) Effective Date means the date of Notification of Award/ Work Order/Contract Signing and from which the time for completion shall be determined.

(xx) Foreign Bidder shall mean any Bidder having nationality of any country other than Bhutan.

(xxi) Joint Venture or "JV" means a joint venture, association or consortium of not more than four (4) legal entities that pool their resources and skills to undertake a large or complex Contract in the role as a Contractor, with all legal entities (members in the JV) being legally liable, jointly and severally, through a joint venture agreement between the members of the JV for the execution of the Contract in the event of a member's withdrawal.

(xxii) Notification of Award (NoA) means the letter or order issued by Employer conveying the acceptance of the Bid of the successful Bidder subject to such terms and conditions as may have been stated therein.

(xxiii) Local Transportation shall include loading, unloading, handling of plant, equipment and materials at the port of entry in India/airport in Bhutan; storage at the port/airport, if required, and subsequent transportation from the port of entry/airport up to the Site.

(xxiv) Month means calendar month of the Gregorian calendar.

(xxv) Materialsareallsupplies,includingconsumables,usedbythe Contractor for incorporation in theWorks.

(xxvi) Party means the Employer or the Contractor, as the context requires, and "Parties" means both of them.

(xxvii) Project Manager means the person appointed by Employer in the manner provided in GCC hereof and named as such in the SCC to perform the duties delegated by Employer.

(xxviii) Plant is any integral part of the Works that shall havea mechanical, electrical, chemical or biologicalfunction.

(xxix) Site is the area defined as such in the SCC.

(xxx) Subcontractor means any person named in the Contract as a subcontractor, or any person appointed by the Contractor as a subcontractor or designer, for a part of the works; and the legal successors in title to each of these persons.

(xxxi) Time for Completion means the time within which completion of the Works as a whole (or of a part of the Works where a separate Time for Completion of such part

dhi Druk Holding & Investments Ltd.
DPC TRONGSA : BHUTAN

has been prescribed) is to be attained in accordance with the stipulations in the SCC and the relevant provisions of the Contract.

(xxxii) Technical Specifications means specifications of the Works incorporated in the bidding documents and forming part of the contract and includes any modification or amendment thereto or any addition thereto or any deduction therefrom, as may be made with the mutual agreement of the Employer and Contractor.

(xxxiii) Temporary Works means all temporary works of every kind (other than Contractor's Equipment) required on Site for the execution of the Works.

(xxxiv) Works shall mean the total work to be executed in accordance with the Contract or part(s) thereof, as the case may be, and shall include all extra or additional, altered or substituted works or temporary/enabling works and urgent works as required for performance of the Contract.

(xxxv) A Variation means any change to the Works, which is instructed as a variation under Clause.

1.2. Interpretation

1.2.1. In the Contract, except where the context requires otherwise:

a. Words indicating one gender shall include all genders;
b. Words indicating the singular also include the plural and words indicating the plural also include the singular;
c. Provisions including the word "agree," "agreed," or "agreement" require the agreement to be recorded in writing;
d. "Written" or "in writing" means hand-written, type-written, printed or electronically made, and resulting in a permanent record;
e. "may" means that the party/person referred to has the choice whether to act or not in the matter referred to; and
f. "shall" means that the party/person referred to has an obligation under the Contract to perform the duty referred to.

1.2.2. "Month" and "Year" and all dates shall be reckoned according to the Gregorian calendar.

1.2.3. A "law" shall be construed as a reference to such law including its amendments or reenactments from time to time.

1.2.4. A "person" shall be construed as a reference to any person, firm, Employer, corporation, society, trust, government, or agency of a government or any association or partnership (whether or not having separate legal personality) of two or more of the above and a person shall be construed as including a reference to its successors, permitted transferees and permitted assigns in accordance with their respective interests.

1.2.5. The words "hereof" or "herein" if and when used in the Contract Documents shall mean a reference to the Contract Documents of this Contract.

1.2.6. Incoterms

a) Unless inconsistent with any provision of the Contract, the meaning of any trade term, when used, and the rights and obligations of Parties thereunder shall be governed by the rules prescribed in the current edition of Incoterms specified in the SCC and published by the International Chamber of Commerce in Paris, France.

1.2.7. Amendment

a) No amendment or other variation of the Contract shall be effective unless it is in writing, is dated, expressly refers to the Contract, and is signed by duly authorized representatives of Employer and the Contractor.

1.2.8. Non-waiver

a) Subject to 1.2.8(b) below, no relaxation, forbearance, delay or indulgence by either party in enforcing any of the terms and conditions of the Contract or the granting of time by either party to the other shall prejudice, affect or restrict the rights of that Party under the Contract, nor shall any waiver by either Party of any breach of Contract operate as waiver of any subsequent or continuing breach of Contract;

b) Any waiver of a party's rights, powers or remedies under the Contract must be in writing, dated and signed by an authorized representative of the party granting such waiver, and must specify the right and the extent to which it is being waived.

1.2.9. Severability

a) If any provision or condition of the Contract is prohibited or rendered invalid or unenforceable, such prohibition, invalidity or unenforceability shall not affect the validity or enforceability of any other provisions and conditions of the Contract.

1.2.10. Entire Agreement

a) The Contract constitutes the entire agreement between Employer and the Contractor, with respect to the subject matter of Contract, and supersedes all communications, negotiations and agreements (whether written or oral) of the Parties with respect thereto made prior to the date of Contract.

1.3. Notices

1.3.1. Notices shall be deemed to include any approvals, consents, instructions, orders, determinations and certificates to be given under the Contract.

1.3.2. Unless otherwise stated in the Contract, all notices to be given under the Contract shall be in writing, and shall be sent by personal delivery, or courier, or post, or electronic mail, writing to the address specified in the SCC.

1.3.3. Any notice sent by post or courier shall be deemed (in the absence of evidence of earlier receipt) to have been delivered ten (10) days after dispatch. In proving the fact of dispatch, it shall be sufficient to show that the envelope containing such notice was properly

addressed, stamped and conveyed to the postal authorities or courier service for transmission by airmail or special courier.

1.3.4. Any notice delivered personally or electronic mail shall be deemed to have been delivered on date of its dispatch. Either Party may change its address at which notices are to be received and/or sent by giving ten (10) days' notices to other Party in writing.

1.4. Governing Law and Language

1.4.1. The Contract shall be governed by and interpreted in accordance with the laws of the Kingdom of Bhutan.

1.4.2. The Contractor shall, in all matters arising in the performance of the Contract, comply in all respects, give all notices and pay all fees required by the provisions of any statute, ordinance or other law or any regulation or by-law of any duly constituted authority of the Kingdom of Bhutan.

1.4.3. The Contractor shall indemnify and hold Employer harmless from and against any and all liabilities, damages, claims, fines, penalties and expenses of whatever nature arising or resulting from the violation of such laws by the Contractor or its personnel including its Sub-Contractors and their employees.

1.4.4. The Contract, as well as all correspondence and documents relating to the Contract exchanged by the Contractor and Employer, shall be written in English. Supporting documents and printed literature that are part of the Contract may be in another language provided they are accompanied by an accurate translation of the relevant passages in English, in which case, for purposes of interpretation of the Contract, the translation shall govern.

1.4.5. The Contractor shall bear all costs of translation to the governing language and all risks of the accuracy of such translation, for documents provided by the Contractor.

1.5. Assignment

1.5.1. The Contractor shall not, without the express prior written consent of Employer, assign to any third party the Contract or any part thereof, or any right, benefit, obligation or interest therein or there under, except that the Contractor shall be entitled to:

1.5.2. Assign either absolutely or by way of charge any monies due and payable to it or that may become due and payable to it under the Contract in favour of its bankers;

1.5.3. Assign to the insurers (in cases where the insurers have discharged the Contractor's loss or liability) of the Contractor's right to obtain relief from any other liable party.

1.6. Fraud and Corruption

1.6.1. If Employer determines that the Contractor and/or any of its personnel, or its agents, or its subcontractors, and/or their employees has engaged in corrupt, fraudulent, collusive coercive, or obstructive practices, in competing for or in executing the Contract, then

Employer may, after giving fourteen (14) days' notice to the Contractor, terminate the Contract and expel him from the site, and the provisions of GCC 14shall apply as if such expulsion had been made under 14.2.1.

1.6.2. For the purposes of this sub-clause,

a) "Corrupt practice" is the offering, giving, receiving or soliciting, directly or indirectly, of anything of value to influence improperly the actions of another party;

b) "Fraudulent practice" is any act or omission, including a misrepresentation, that knowingly or recklessly misleads, or attempts to mislead, a party to obtain a financial or other benefit or to avoid an obligation;

c) "Collusive practice" is an arrangement between two or more parties designed to achieve an improper purpose, including to influence improperly the actions of another party;

d) "Coercive practice" is impairing or harming, or threatening to impair or harm, directly or indirectly, any party or the property of the party to influence improperly the actions of a party;

e) "Obstructive practice" is

a. Deliberately destroying, falsifying, altering or concealing of evidence material during an investigation or making false statements to investigators in order to materially impede any investigation into allegations of a corrupt, fraudulent, coercive or collusive practice; and/or threatening, harassing or intimidating any party to prevent it from disclosing its knowledge of matters relevant to the investigation or from pursuing the investigation, or

b. Acts intended materially to impede the exercise of the inspection rights of Employer or any organization or person appointed by Employer.

1.7. Joint Venture

1.7.1. If the Contractor is a joint venture, all such parties shall be jointly and severally bound to Employer for the fulfilment of the obligations under the Contract and shall designate one of such firms/parties to act as a leader with authority to bind the joint venture. The composition or the constitution of the joint venture shall not be altered without the prior consent of Employer.

2. The Employer

2.1. Access to Site

2.1.1. Employer shall give access to and possession of all parts of the Site including special and/or temporary rights-of-way to the Contractor, free from all encumbrances. Employer reserves the right to hand over the Site in parts progressively to the Contractor. The

Contractor shall be required to take possession of the Site without any undue delay and commence the Works on the released fronts in parts without any reservation whatsoever.

2.1.2. The Contractor shall allow the Project Manager and any person authorized by the Employer access to the Site and to any place where work in connection with the Contract is being carried out or is intended to be carried out.

2.2. Employer Representative

2.2.1. Project Manager

a) If the Project Manager is not named in the Contract, then within fourteen (14) days of the Effective Date, Employer shall appoint and notify the Contractor in writing of the name of the Project Manager. Employer may from time to time appoint some other person as the Project Manager in place of the person previously so appointed, and shall give a notice of the name of such other person to the Contractor without delay. Employer shall take reasonable care to see that no such appointment is made at such a time or in such a manner as to impede the progress of Works. The Project Manager shall represent and act for Employer at all times during the currency of the Contract and carry out duties and responsibilities specified in the Contract. All notices, instructions, orders, certificates, approvals and all other communications under the Contract shall be given by the Project Manager, except as herein otherwise provided.

b) The Project Manager's representative shall be appointed by and be responsible to the Project Manager and shall carry out such duties and exercise such authority as may be delegated to him by the Project Manager under c) Project Manager's representative shall have no authority to relieve the Contractor of any of his duties or obligations under the Contract except as expressly provided hereunder or elsewhere in the Contract, nor to order any work involving delay or any extra payment by Employer, nor to make any variation in the Works.

c) The Project Manager may, from time-to-time delegate to the Project Manager's representative any of the powers and authorities vested in the Project Manager and he may at any time revoke such delegation. Any communication issued by the Project Manager's representative to the Contractor in accordance with such delegation shall have the same effect as though it had been issued by the Project Manager, provided that:

d) Any failure on the part of the Project Manager's representative to disapprove any work or materials shall not prejudice the authority of the Project Manager thereafter to disapprove such work or materials and to give instructions for the removal or for the rectification thereof;

e) If the Contractor questions any communication of the Project Manager's representative, he may refer the matter to the Project Manager who shall confirm, reverse or vary the contents of such communication.

f) The Project Manager or his representative may appoint any number of persons to assist the Project Manager's representative in carrying out his duties. Such assistants shall have no authority to issue any instructions to the Contractor save in so far as such instructions may be necessary to enable them to carry out their duties and to secure their acceptance of materials, plant, equipment and machinery or workmanship as being in accordance with the Contract, and any instructions given by any of them for those purposes shall be deemed to have been given by the Project Manager's representative.

2.3. Employer's Responsibilities

2.3.1. Employer shall ensure the accuracy of all information and/or data to be supplied by Employer, except when otherwise expressly stated in the Contract.

2.3.2. Employer shall be responsible for acquiring and providing legal and physical possession of the site and access thereto, and for providing possession of and access to all other areas reasonably required for the proper execution of the Contract, including all requisite rights of way.

2.3.3. If requested by the Contractor, Employer shall try its best to assist the Contractor in obtaining in a timely and expeditious manner all permits, approvals and/or licenses necessary for the execution of the Contract from all government authorities or public service undertakings that such authorities or undertakings require the Contractor or subcontractors or the personnel of the Contractor or subcontractors, as the case may be.

2.3.4. If so specified in the SCC, the Employer shall provide qualified personnel; shall supply and make available all raw materials, utilities, lubricants, chemicals, catalysts, other materials and facilities and shall perform work and services of whatsoever nature to enable the Contractor to complete the Works at or before the time specified in the program furnished by the Contractor under 3.143.14 hereof and in the manner thereupon specified or as otherwise agreed upon by Employer and the Contractor.

3. The Contractor

3.1. Responsibility of the Contractor

3.1.1. The Contractor shall design, execute and complete the works in accordance with the Contract and with the Project Manager's instructions, and shall remedy any defects in the works.

3.1.2. The Contractor shall provide all documents specified in the Contract, and all Contractor's personnel, goods, consumables and other things and services, whether of a temporary or permanent nature, required in and for the design, execution, and completion of Works and remedying of defects.

3.1.3. The Contractor shall be responsible for the adequacy, stability, and safety of all site operations and of all methods of construction. The Contractor (i) shall be responsible for all Contractor's documents, temporary works and such design of each item of Works,

dhi Druk Holding & Investments Ltd.
DPC the Company
RONGSA : BHUTAN

equipment or materials as is required for the item to be in accordance with the contract and (ii) shall not otherwise be responsible for the design or specification of the permanent works.

3.1.4. The Contractor shall, whenever required by the Project Manager, submit details of the arrangements and methods which the Contractor purposes to adopt for the execution of the works. No significant alteration to these arrangements and methods shall be made without this having previously being notified to the Project Manager.

3.1.5. If the Contract specifies that the Contractor shall design any part of the permanent works, then unless otherwise stated:

a) The Contractor shall submit to the Project Manager the Contractor's documents for this part in accordance with the procedures specified in the Contract;

b) The Contractor's documents, in this regard, shall be in accordance with the specification and drawings, shall be written in the language for communications defined in GCC 1.4and shall include additional information required by the Project Manager to add to the drawings for co-ordination of each party's designs;

c) The Contractor shall be responsible for this part and it shall, when the works are completed, be fit for such purposes for which the part is intended as are specified in the Contract; and

d) Prior to the commencement of the tests on completion, the Contractor shall submit to the Project Manager the "as- built" documents and operation and maintenance manuals in accordance with the specification and in sufficient detail for the Project Manager to operate, maintain, dismantle, reassemble, adjust and repair this part of the Works. Such part shall not be considered to be completed for the purpose of taking-over under GCC.9.2until these documents and manuals have been submitted to the Project Manager.

3.1.6. Within 14 days of possession of site, the Contractor shall erect an information board as specified in SCC and construct a permanent board towards the completion of Project.

3.2. Performance Security

3.2.1. The Contractor shall, within thirty (30) days of the Notification of Award, provide a performance security equivalent to ten percent (10%) of the Contract Price valid until as specified in SCC. However, in case of delay in completion of the Contract, the validity of the contract performance security shall be extended by the Contractor for such period of delay. Employer shall encash the performance security to avoid it becoming invalid in case of failure by Contractor to extend the validity before 7 days of expiry.

3.2.2. For Contracts not deducting retention money if specified in SCC, the Contractor shall extend the validity of the performance security until 30 days beyond defect liability period (DLP) before the release of final bill payment. In case of failure to extend, Employer shall withhold from final payment equivalent to 10% of the executed Contract price or the total

final payment, in lieu of retention money. If the executed Contract price exceeds the Contract price, then retention money equivalent to 10% of the exceeded amount in addition to the performance security already submitted shall be deducted from the running bills and retained until 30 days beyond DLP.

3.2.3. The performance security shall be denominated in the currency or currencies of the Contract or in a freely convertible currency acceptable to Employer and shall be in the form specified in SCC, issued/enforceable by any financial institution.

3.2.4. The performance security shall be discharged and returned to the Contractor with in thirty (30) days after the issuance of Work completion certificate/no defects liability certificate, whichever is applicable.

3.2.5. The proceeds from the Performance Security shall be payable to Employer as compensation for any loss resulting from the Contractor's failure to complete its obligations under the Contract.

3.3. Contractor's Representative and Construction Manager

3.3.1. If the Contractor's Representative is not named in the Contract, then within fourteen (14) days of the Effective Date, the Contractor shall appoint his representative and shall request Employer in writing to approve the person so appointed. If Employer makes no objection to the appointment within fourteen (14) days, the Contractor's Representative shall be deemed to have been approved. If Employer objects to the appointment within fourteen (14) days giving the reason thereof, then the Contractor shall appoint a replacement within fourteen (14) days of such objection, and the foregoing provisions of this clause 3.3.1 shall apply thereto.

3.3.2. The Contractor's Representative shall represent and act for the Contractor at all times during the currency of the Contract and shall give to the Project Manager all the Contractor's notices, instructions, information and all other communications under the Contract.

3.3.3. All notices, instructions, information and all other communications given by Employer or the Project Manager to the Contractor under the Contract shall be given to the Contractor's Representative or, in its absence, its deputy, except as herein otherwise provided.

3.3.4. The Contractor shall not revoke the appointment of the Contractor's Representative without Employer's prior written consent, which shall not be unreasonably withheld. If Employer consents thereto, an equivalently qualified, experienced and competent replacement shall be appointed in pursuant to the procedure set out in 3.3.1 3.3.1.

3.3.5. The Contractor's Representative may, subject to the approval of Employer (which shall not be unreasonably withheld), at any time delegate to any person any of the powers, functions and authorities vested in him or her. Any such delegation may also be revoked at any time subject to the approval of Employer. Any such delegation or revocation shall be subject to a prior notice signed by the Contractor's Representative, and shall specify the powers, functions and authorities thereby delegated or revoked. No such delegation or

revocation shall take effect unless and until a copy thereof has been delivered to Employer and the Project Manager.

3.3.6. Any act or exercise by any person of powers, functions and authorities so delegated to him or her in accordance with this clause 3.3.53.3.5 shall be deemed to be an act or exercise by the Contractor's Representative.

3.3.7. From the commencement of Works at the Site until operational acceptance, the Contractor's Representative shall appoint a suitable person as the construction manager (hereinafter referred to as "the Construction Manager"). The Construction Manager shall supervise all work done at the Site by the Contractor and shall be present at the Site throughout normal working hours except when on leave, sick or absent for reasons connected with the proper performance of the Contract. Whenever the Construction Manager is absent from the Site, an equivalently qualified, experienced and competent person shall be appointed to act as his or her deputy.

3.3.8. Employer may by notice to the Contractor object to any representative or person employed by the Contractor in the execution of the Contract who, in the reasonable opinion of Employer, may behave inappropriately, may be incompetent or negligent, or may commit a serious breach of the Site regulations provided under GCC 3.8Employer shall provide evidence of the same, whereupon the Contractor shall remove such person from the Site.

3.3.9. If any representative or person employed by the Contractor is removed in accordance with 3.3.83.3.8, the Contractor shall, where required, promptly appoint a replacement.

3.3.10. If any dispute of any kind whatsoever arises between Employer and the Contractor in connection with or arising out of the Contract, including without prejudice to the generality of the foregoing, any question regarding its existence, validity or termination, or the execution of the works – whether during the progress of the works or after their completion and whether before or after the termination, abandonment or breach of the Contract – the parties shall seek to resolve any such dispute or difference by mutual consultation.

3.4. Opportunities for other Contractors

3.4.1. The Contractor shall, upon written request from Employer or the Project Manager, provide a reasonable opportunity to other Contractors employed by Employer to carry out the work at or near the Site. If the Contractor so requires, Employer shall facilitate the Contractor to make use of the facilities created by other Contractors in and around the site, for the purpose of execution of the Contract. In the process of and as a result of using such facilities, if any damage is caused to the Works, the Contractor shall be responsible to make good such damage at his own cost.

3.4.2. If the Contractor, upon written request from Employer or the Project Manager, makes available to other Contractors any roads or access ways, (the maintenance for which the Contractor is responsible), permits the use by such other Contractors of the Contractor's Equipment, or provides any other service of whatsoever nature to such other Contractors, Employer shall fully compensate the Contractor for any loss or damage caused or

occasioned by such other Contractors in respect of any such use or service, and shall pay to the Contractor a reasonable remuneration for the use of such equipment or the provision of such services.

3.4.3. The Contractor shall also arrange to perform its work so as to minimize, to the extent possible, interference with the work of other Contractors. The Project Manager shall determine the resolution of any difference or conflict that may arise between the Contractor and other Contractors and the workers of Employer with regard to their work.

3.4.4. The Contractor shall notify the Project Manager promptly of any defects in the other Contractors' work that come to its notice, and that could affect the Contractor's work. The Project Manager shall determine the corrective measures, if any, required to rectify the situation after inspection of the Works. Decisions made by the Project Manager shall be binding on the Contractor.

3.5. Emergency Work

3.5.1. If, for reason of an emergency arising during the execution of the Contract, any protective or remedial work is necessary as a matter of urgency to prevent damage to the Works, the Contractor shall immediately carry out such work.

3.5.2. If the Contractor is unable or unwilling to do such work immediately, Employer may do or cause such work to be done, as it may determine it necessary in order to prevent damage to the Works. In such event Employer shall, as soon as practicable after the occurrence of any such emergency, notify the Contractor in writing of such emergency, the work done and the reasons thereof. If the work done or caused to be done by Employer is work that the Contractor was liable to do at its own expense under the Contract, the reasonable costs incurred by Employer in connection therewith shall be paid by the Contractor to Employer.

3.6. Progress Review Meetings

3.6.1. The Contractor shall attend all periodic progress review meetings organized by the Project Manager or his authorized representative. The deliberations in the meetings shall inter-alia include the scheduled program, progress of work achieved (including details of manpower, tools and plants deployed by the Contractor vis-a-vis agreed work schedule), inputs to be provided by Employer, delays, if any and recovery programme, specific hindrances to the Works and work instructions by the Project Manager. The minutes of such meetings shall be prepared by the Project Manager. These minutes shall be jointly signed by the Project Manager or his authorized representative and the Contractor and one copy of the signed minutes shall be handed over to the Contractor.

3.7. Protection of the Environment

3.7.1. The Contractor shall take all reasonable steps to protect the environment on and off the Site and to avoid damage or nuisance to persons or to property of the public or others resulting from pollution, noise or other causes arising as a consequence of his methods of operation, and shall preserve and protect all existing vegetation and trees on or adjacent to the Site which do not unreasonably interfere with the execution of the Works. The

Contractor shall be held responsible for all unauthorized cutting of and damage to trees, by careless operation of his plant, equipment or materials and stockpiling of materials etc. and Employer shall have no responsibility on this account.

3.8. Site Regulations and Safety

3.8.1. Employer and the Contractor shall establish Site regulations setting out the rules to be observed in the execution of the Contract at the Site and shall comply therewith. The Contractor shall draft site regulations and submit a copy to the Project Manager, Employer for his approval, which approval shall not be unreasonably withheld. Notwithstanding the approval of the Project Manager, the Contractor shall be responsible for the adequacy, stability and safety of all Site operations and methods of execution of the Contract.

3.8.2. Such Site regulations shall include, but shall not be limited to, rules in respect of security, safety of the Works, gate control, sanitation, medical care, and fire prevention.

3.9. Site Clearance

3.9.1. Site Clearance in course of performance: In the course of carrying out the Contract, the Contractor shall keep the Site reasonably free from all unnecessary obstruction, store or remove any surplus materials, clear away any wreckage, rubbish or temporary works from the Site, and remove any Contractor's Equipment no longer required for execution of the Contract.

3.9.2. Clearance of Site after completion: After completion of all parts of the Works, the Contractor shall clear away and remove all wreckage, rubbish and debris of any kind from the Site, and shall leave the Site and Works clean and safe to the satisfaction of the Project Manager, without which the final bill shall be withheld.

3.10. Watching and Lighting

3.10.1. The Contractor shall provide and maintain at its own expense all lighting, fencing, and watching when and where necessary for the proper execution and the protection of the Works, or for the safety of the owners and occupiers of adjacent property and for the safety of the public.

3.11. Explosives

3.11.1. Permission for the use of explosives shall be obtained from the Project Manager or from any appropriate authority as directed by the Project Manager and all explosive materials shall be used only under close supervision. It shall be the responsibility of the Contractor to seek and obtain any necessary permits, and to ensure that the requirements of the authorities are complied with, in all respects. Failure to do so may result in the Project Manager withdrawing permission to use explosives. The indemnification provided for shall include indemnification against all claims in respect of any incident arising from the use of explosives.

3.12. Temporary Utilities

3.12.1. The Contractor, except as stated in SCC, be responsible for the provision of all temporary utilities, including electricity, gas, telecommunication, drinking water, construction water and any other services the Contractor may require for the execution of the Works.

3.13. Working hours

3.13.1. Unless otherwise provided in the Contract, no work shall be carried out during the night and on public holidays of the Kingdom of Bhutan without prior written consent of Employer, except where work is necessary to ensure the safety of the Works, for the protection of life, or to prevent loss or damage to property. Where work is needed to be carried out during public holidays, the Contractor shall immediately advise the Project Manager and seek his advice and consent. However, the provisions of this clause shall not apply to any work, which is customarily carried out in multiple shifts. Notwithstanding the above provisions, female labour shall not be employed in night shifts.

3.13.2. Notwithstanding 3.13.1 or 5.15.2, if and when the Contractor considers it necessary to carry out work at night or on public holidays so as to meet the Time for Completion and requests the Employer's consent thereto, Employer shall not unreasonably withhold such consent.

3.14. Program of Performance

3.14.1. Within twenty-eight (28) days of the Effective Date, the Contractor shall prepare and submit in soft copies to the Project Manager for his approval a detailed program of performance of the Contract, made in the form of PERT network (prepared in the software as may be directed by Employer) and showing the sequence in which it proposes to design, execute and complete the Works as well as the date(s) by which the Contractor reasonably requires that Employer shall have fulfilled its obligations under the Contract so as to enable the Contractor to execute the Contract in accordance with the program and to achieve completion of the Works in accordance with the Contract. The Contractor shall update and revise the program as and when appropriate or when required by the Project Manager, but without modification in the Time for Completion given in the SCC and any extension granted in accordance with GCC 8.3, and shall submit all such revisions to the Project Manager for his approval.

3.15. Progress of Performance

3.15.1. If at any time the Contractor's actual progress falls behind the program referred to in 3.143.14.1, or it becomes apparent that it shall so fall behind, the Contractor shall, at the request of Employer or the Project Manager, prepare and submit to the Project Manager a revised program, taking into account the prevailing circumstances, and shall notify the Project Manager of the steps being taken to expedite progress so as to attain completion of the Works within the Time for Completion under GCC 8.1, any extension thereof entitled under GCC 8.3.1, or any extended period as may otherwise be agreed upon between Employer and the Contractor.

4. Subcontracting

4.1. The Contractor shall not Sub-Contract any part of the Contract or any part of the scope of work under the Contract, without explicit and written approval of Employer.

4.2. Where sub-Contracting is allowed and approved, the Contractor shall prepare a list of subcontractors with the approval of Employer. The Contractor may propose any addition to or deletion from any such list. The Contractor shall submit any such list or any modification thereto to Employer for its approval in sufficient time so as not to impede the progress of Works. Such approval by Employer for any of the subcontractors shall not relieve the Contractor from any of its obligations, duties or responsibilities under the Contract.

4.3. The Contractor shall be responsible fully for the acts, defaults and negligence of his sub-Contractors, their agents, servants, and workmen as if such acts, defaults, and negligence is of the Contractor. The Contractor shall be under obligation to furnish the un-priced copies of the Contracts awarded to the sub-Contractors at the request of Employer.

5. Contractor's Staff/Labour and Equipment

5.1. Key Personnel

5.1.1. The Contractor shall employ the key personnel named in the Schedule of Key Personnel, as referred to in the SCC, to carry out the functions stated in the Schedule or other personnel approved by the Project Manager. The Project Manager shall approve any proposed replacement of key personnel only if their relevant qualifications and abilities are substantially equal to or better than those of the personnel listed in the Schedule. If the Contractor fails to deploy the personnel as committed in the Biding Document, the employer shall stop the work if the quality of work is going to suffer or otherwise deduct the salaries of such personnel at a rate stipulated in the SCC per month per personnel for every month of absence of such personnel from the site. Such deductions shall continue till such time that the Contractor deploys the key personnel acceptable to the employer. If the Contractor fails to deploy such key personnel within one to four months, the deductions may be discontinued and the Contractor's failure to deploy such personnel shall be treated as a fundamental breach of Contract. This shall also apply to the commitment of employment to Bhutanese.

5.2. Labour

5.2.1. The Contractor shall provide and employ on the Site in the execution of the Works such skilled, semi-skilled and unskilled labour as is necessary for the proper and timely execution of the Contract. The Contractor is encouraged to use local labour that has the necessary skills.

5.2.2. Unless otherwise provided in the Contract, the Contractor shall be responsible for the recruitment, transportation, accommodation, medical care and catering of all labour, local or expatriate, required for the execution of the Contract and for all payments in connection therewith.

5.2.3. The Contractor shall be responsible, at his own cost, for obtaining all necessary permit(s) and/or visa(s) from the appropriate authorities for the entry of all labour and personnel to be employed on the Site into the Kingdom of Bhutan. The Contractor shall submit to Employer for its approval details and bio-data of all expatriate personnel, which he proposes to engage for the performance of Works under the Contract, at least sixty (60) days prior to their departure for Bhutan. Such data for each personnel shall contain, among other details, his name, present address, his assignment and responsibility in connection with the Works, and a short resume of his qualifications, experience etc. in relation to the works to be performed by him.

5.2.4. Any expatriate personnel deployed for the Works at Site, if found unsuitable or unacceptable later on to RGoB/ Employer, shall within a reasonable time, be repatriated by the Contractor, who shall make alternative arrangements for providing a suitable replacement.

5.2.5. The Contractor shall at its own expense provide the means of repatriation to all of its and its subcontractor's personnel employed on the Contract at the Site to their various home countries. It shall also provide suitable temporary maintenance of all such persons from the cessation of their employment on the Contract to the date programmed for their departure. In the event that the Contractor defaults in providing such means of transportation and temporary maintenance, Employer may provide the same to such personnel and recover the cost of doing so from the Contractor.

5.2.6. No person brought to Bhutan for the completion of Works shall be repatriated without the consent of the Project Manager on a written request from the Contractor for such repatriation giving reasons thereof. The Project Manager may give permission for such repatriation provided it is satisfied that the progress of Works shall not suffer due to such repatriation/replacement.

5.2.7. The Contractor shall at all times during the progress of the Contract use its best endeavors to prevent any unlawful, riotous or disorderly conduct or behavior by or amongst its employees and the labour of its subcontractors for the preservation of peace and protection of persons and property at the Site and its surroundings.

5.2.8. In dealing with the labourers and workers engaged at the Works by him or his sub-Contractors, the Contractor shall pay due regards to all recognized festivals, holidays, and traditions and cultures of the labourers. The Contractor shall also comply with all local laws and regulations pertaining to labour and expatriate personnel issued by Ministry of Home and Cultural Affairs, RGOB. The Contractor shall indemnify Employer in respect of all claims that may be made against Employer for non-compliance thereof by the Contractor. In case of non-compliance by the Contractor, the Project Manager may take such actions as may be necessary for compliance of the various labour laws and recover the costs thereof from the Contractor.

5.2.9. The Contractor shall, deliver to the Project Manager or to the Project Manager's representative, a report in such form and at such intervals as the Project Manager may prescribe, regarding the number and names of supervisory staff and different categories of labour engaged by the Contractor.

5.3. Contractor's Equipment

5.3.1. All the equipment brought by the Contractor onto the Site shall be deemed to be intended to be used exclusively for the execution of the Contract. The Contractor shall not remove the same from the Site without the Project Manager's consent stating that the equipment is no longer required for the execution of the Contract.

5.3.2. The Contractor shall deploy construction equipment as per agreed schedule. Provided further that in case of slow rate of progress of Works, the Contractor should supplement the agreed schedule of Contractor's Equipment with additional construction equipment so as to ensure completion of Works within Time for Completion at no extra cost to Employer.

5.3.3. If the Contractor does not make available at site the equipment committed for the Contract, the hiring charges of such equipment shall be deducted at a rate stipulated in the SCC per month for every month of absence for a period up to four months after which the deductions shall be discontinued and the Contractor's failure to produce such equipment at site shall be treated as a fundamental breach of Contract.

5.3.4. Unless otherwise specified in the Contract, upon completion of the Works, the Contractor shall remove from the Site all Contractor's Equipment brought by the Contractor onto the Site and any surplus materials remaining thereon.

5.3.5. Employer may, if requested, use its best endeavours to assist the Contractor in obtaining any government permission required by the Contractor for the export of the Contractor's Equipment imported by the Contractor for use in the execution of the Contract that is no longer required for the execution of the Contract.

6. Plant, Material and Workmanship

6.1. Methodology of Construction & Equipment mobilization

6.1.1. Methodology of construction and the work plan adopted by Contractor shall match the construction methodology/requirements specified in the Technical Specifications. The suggested minimum plant & equipment and machinery to be deployed by the Contractor for the execution of Works shall be as given in Technical Specifications. The Contractor shall arrange at his own expense all tools, plant and equipment required for execution of the Works.

6.2. Test and Inspection

6.2.1. The Contractor shall at its own expense carry out at the place of manufacture and/or on the Site all such tests and/or inspections of the plant, materials and any part of the Works as specified in the Contract.

6.2.2. Employer and the Project Manager or their designated representatives shall be entitled to attend the aforesaid test and/or inspection, provided that Employer shall bear all costs and

expenses incurred in connection with such attendance including, but not limited to, all travelling and boarding & lodging expenses.

6.2.3. Whenever the Contractor is ready to carry out any such test and/or inspection, the Contractor shall give a reasonable advance notice of such test and/or inspection and of the place and time thereof to the Project Manager. The Contractor shall obtain from any relevant third party or manufacturer any necessary permission or consent to enable Employer and the Project Manager (or their designated representatives) to attend the test and/or inspection.

6.2.4. The Contractor shall provide the Project Manager with a certified report of the results of any such test and/or inspection.

6.2.5. If Employer or Project Manager (or their designated representatives) fails to attend the test and/or inspection, or if it is agreed between the Parties that such persons shall not do so, then the Contractor may proceed with the test and/or inspection in the absence of such persons, and may provide the Project Manager with a certified report of the results thereof.

6.2.6. The Project Manager may require the Contractor to carry out any test and/or inspection not required by the Contract, provided that the Contractor's reasonable costs and expenses incurred in the carrying out of such test and/or inspection shall be added to the Contract Price. Further, if such test and/or inspection impede the progress of Works and/or the Contractor's performance of its core obligations under the Contract, due allowance shall be made in respect of the Time for Completion and the other obligations so affected.

6.2.7. If any part of the Works fails to pass any test and/or inspection, the Contractor shall either rectify or replace such part of the Works and shall repeat the test and/or inspection upon giving a notice in accordance with clause 6.2.36.2.3.

6.2.8. If any dispute or difference of opinion shall arise between the Parties in connection with or arising out of the test and/or inspection of any part of the Works that cannot be settled between the Parties within a reasonable period of time, it may be referred to the Adjudicator for determination in accordance with 3.2.

6.2.9. The Contractor agrees that neither the execution of a test and/or inspection of plant, equipment or any part of the Works, nor the attendance by Employer or the Project Manager, nor the issue of any test certificate pursuant to 6.2.4, shall release the Contractor from any other responsibilities under the Contract.

6.2.10. No part of the Works or foundations shall be covered up on the Site without the Contractor carrying out any test and/or inspection required under the Contract. The Contractor shall give a reasonable notice to the Project Manager whenever any such part of the Works or foundations is ready or about to be ready for test and/or inspection; such test and/or inspection and notice thereof shall be subject to the requirements of the Contract. The Project Manager shall then without unreasonable delay carry out the test/inspection or measurement.

6.2.11. The Contractor shall uncover any part of the Works, or shall make openings in or through the same as the Project Manager may from time to time require at the Site, and shall reinstate and make good such part or parts.

6.2.12. If any part of the Works have been covered up at the Site after compliance with the requirement of 6.2.106.2.10 and are found to be executed in accordance with the Contract, the expenses of uncovering, making openings in or through, reinstating, and making good the same shall be borne by Employer, and the Time for Completion shall be reasonably adjusted to the extent that the Contractor has thereby been delayed or impeded in the performance of any of its obligations under the Contract.

7. Work Execution

7.1. Benchmark

7.1.1. The Contractor shall be responsible for the true and proper setting-out of the Works in relation to bench marks, reference marks and lines provided to it in writing by or on behalf of Employer.

7.1.2. If, at any time during the progress of Works, any error shall appear in the position, level or alignment of the Works, the Contractor shall forthwith notify the Project Manager of such error and, at its own expense, immediately rectify such error to the reasonable satisfaction of the Project Manager. If such error is based on incorrect data provided in writing by or on behalf of Employer, the expense of rectifying the same shall be borne by Employer. The checking of any benchmark by the Project Manager shall not relieve the Contractor of his responsibility.

7.2. Contractor's Supervision

7.2.1. The Contractor shall give or provide all necessary superintendence during the execution of Works, and the Construction Manager or its deputy shall be on the Site to provide full-time superintendence of the execution as long as the Project Manager may consider necessary for the proper fulfilment of the Contractual obligations. The Contractor shall provide and employ only technical personnel who are skilled and experienced in their respective callings and supervisory staff who are competent to adequately supervise the work at hand.

7.3. Quality Assurance Program

7.3.1. Sampling, testing and quality assurance requirements shall be as per the details given in Technical Specifications. All costs associated with testing of materials required as per Technical Specifications shall be deemed to be included in the rates/prices in the Bill of Quantities.

7.4. Progress Report

7.4.1. The Contractor shall monitor progress of all the activities specified in the program referred to in 3.143.14.1 above, and supply a progress report to the Project Manager every month.

7.4.2. The progress report shall be in a form acceptable to the Project Manager and shall include, among other details: (a) percentage completion achieved vis-à-vis planned activities; and (b) where any activity is behind schedule providing reasons and likely consequences and stating the corrective action being taken. The progress report shall be supported by photographs and other written material as the Project Manager may direct.

7.5. Materials obtained from excavation

7.5.1. Materials of any kind obtained from excavation on the Site shall remain the property of Employer and shall be disposed of as the Project Manager may direct.

7.5.2. All fossils, coins, articles of value or antiquity, structures and other remains or things of geological or archaeological interest discovered on the Site shall be the absolute property of Employer and the Contractor shall take reasonable precautions to prevent his workmen or any other person from removing or damaging any such article or thing. Upon discovery and before removal of such items or structures, the Contractor shall immediately inform the Project Manager and shall dispose the same as per the direction of the Project Manager and at the cost of Employer.

8. Commencement, Delays and Suspension

8.1. Time for commencement and completion

8.1.1. The Works must be taken up and completed in all respects within the specified time of completion as mentioned in the SCC and the NoA.

8.1.2. Before the actual commencement of works, the Contractor shall submit an execution schedule of work clearly showing the materials, men and equipment to be mobilized by him to execute the works. The schedule should contain the planned monthly progress of the works for the approval of the Project Manager who shall have the authority to make additions, alternations and substitutions to such schedule in consultation with the Contractor.

8.2. Manner of Execution

8.2.1. The Contractor shall carry out all aspects of the Works in the manner (if any) specified in the Contract:

a) In a proper workmanlike and careful manner with a high sense of aesthetics and in accordance with recognized good practice; and

b) With properly equipped facilities and using non-hazardous materials, except as otherwise specified in the Contract.

8.2.2. Within thirty (30) days of the Effective Date, the Contractor shall prepare and submit in soft copies to the Project Manager for his approval a detailed construction schedule showing the sequence and interdependence of activities and work breakdown structure

covering all the activities to meet milestone schedules for complete performance of work, starting from the commencement date to completion within the Time for Completion.

8.2.3. The detailed construction schedule shall include time scaled network diagrams and Gantt charts, based on calendar days. It shall be constructed to show the order in which the Contractor proposes to carry out the work and availability/requirement and use of manpower, materials and construction equipment. The Contractor shall utilize the detailed construction schedule in planning, scheduling, monitoring, coordinating and performing the Works under the Contract (including activities of subcontractors, plant vendors, material suppliers, etc.). The program so submitted by the Contractor shall be in accordance with the Contract.

8.2.4. The Project Manager and Contractor shall meet within seven (7) days of submittal of the detailed construction schedule to review and make any necessary adjustments or revisions. The Contractor shall submit the revised schedule within seven (7) days of re-submission. The process of finalizing the detailed construction schedule shall be completed within sixty (60) days from the date of issue of Notification of Award. The detailed construction schedule, once approved by Employer, shall become the baseline record schedule. The baseline detailed construction schedule shall be used for all monitoring and evaluation of Contractor's performance.

8.2.5. The Contractor shall update and revise the schedule as and when appropriate or when required by the Project Manager, but without modification in the Time for Completion and any extension granted and shall submit all such revisions to the Project Manager for his approval.

8.2.6. If at any time the Contractor's actual progress falls behind the program, or it becomes apparent that it shall so fall behind, the Contractor shall, at the request of Employer or the Project Manager, prepare and submit to the Project Manager a revised program, taking into account the prevailing circumstances, and shall notify the Project Manager of the steps being taken to expedite progress so as to attain completion of the Works within the Time for Completion, any extension thereof entitled, or any extended period as may otherwise be agreed upon between Employer and the Contractor.

8.3. Extension of Time for Completion

8.3.1. The Time(s) for Completion specified in the SCC shall be extended if the Contractor is delayed or impeded in the performance of any of its obligations under the Contract by reason of any of the following:

a) Any Change in the Works as provided in GCC 12.2;
b) Any occurrence of Force Majeure as provided in GCC 16
c) Any suspension order given by Employer under GCC 14.5 hereof or reduction in the rate of progress pursuant to 14.5.4;
d) Any changes in laws and regulations as provided in GCC 12.7.1
e) Any default or breach of the Contract by Employer, specifically including failure to supply agreed items or any activity, act or omission of any other Contractors employed by Employer; or
f) Any other matter specifically mentioned in the Contract.

8.3.2. Extension of time shall be for such period as shall be fair and reasonable in all the circumstances and as shall fairly reflect the delay or impediment sustained by the Contractor.

8.3.3. Except where otherwise specifically provided in the Contract, the Contractor shall submit to the Project Manager a notice of a claim for an extension of the Time for Completion, together with particulars of the event or circumstance justifying such extension as soon as reasonably practicable after the commencement of such event or circumstance. As soon as reasonably practicable after receipt of such notice and supporting particulars of the claim, Employer and the Contractor shall agree upon the period of such extension. In the event that the Contractor does not accept Employer's estimate of a fair and reasonable time extension, the Contractor shall be entitled to refer the matter to the Adjudicator, pursuant to 3.2.

8.3.4. In no case the extension in Time for Completion shall be permitted for the defaults on the part of the Contractor.

8.4. Liquidated Damages

8.4.1. The Contractor shall pay liquidated damages to the Employer at the rate per day stated in the SCC for each day that the Completion Date is later than the Intended Completion Date. The total amount of liquidated damages shall not exceed the ten percent (10%) of the executed Contract Price. The Employer may deduct liquidated damages from payments due to the Contractor. Payment of liquidated damages shall not affect the Contractor's liabilities.

9. Taking Over

9.1. Test on Completion

9.1.1. The Contractor shall carry out the tests on completion in accordance with clause GCC 6.2.

9.1.2. The Contractor shall provide to the Project Manager with a minimum of twenty-one (21) days' notice of the date after which the Contractor shall be ready to carry out each of the tests on completion. Unless otherwise agreed, tests on completion shall be carried out within fourteen (14) days after the notice period on such day or days, as the Project Manager shall instruct.

9.1.3. In considering the result of the tests on completion, Employer shall make allowances for the effect of any use of the Works by Employer on the performance or other characteristics of the Works. As soon as the Works, or a part, have passed any tests on completion, the Contractor shall submit a certified report of the results of these tests to Employer.

9.1.4. If the tests on completion are being unduly delayed by the Contractor, Employer may by notice require the Contractor to carry out the tests within twenty-one (21) days after

receiving the notice. The Contractor shall carry out the tests on such day or days within that period as the Contractor may fix and of which he shall give notice to Employer.

9.1.5. If the Contractor fails to carry out the tests on completion within the period of twenty-one (21) days, the Employer's personnel may proceed with the tests at the risk and cost of the Contractor. The tests on completion shall then be deemed to have been carried out in the presence of the Contractor and the result of the tests shall be accepted as accurate.

9.1.6. If the Works, or a part, fail to pass the tests on completion, Employer may require the failed tests on completion on any related work, to be repeated under the same terms and conditions.

9.1.7. If the Works, or a part, fail to pass the tests on completion repeated under GCC.9.1 above, the Project Manager shall be entitled to:

a) order further repetition of tests on completion as provided under GCC.9.1;
b) reject the Works if the effect of the failure is to deprive Employer of substantially the whole benefits of the Works in which event Employer shall have the same remedies as are provided in GCC 10.3.3 (c);
c) issue a Taking-Over Certificate, if Employer so requests.

9.2. Taking Over of Works

9.2.1. The Works shall be taken over by Employer upon successful execution of Works by the Contractor in accordance with provisions of Contract.

9.2.2. On successful completion of Works or any part thereof and upon request of the Contractor for taking over the Works and issuance of Taking Over Certificate (TOC), Employer shall, within forty-five (45) days after the receipt of the Contractor's application, or within fifteen (15) days from the date of actual handing over of relevant Works, whichever is later, either issue the TOC or reject the application giving its reasons and specifying the work required to be done by the Contractor to enable the TOC to be issued.

9.2.3. TOC shall be issued to the Contractor specifying the date on which the Works or any part thereof were complete and ready for taking over, after ascertaining the following:

a) The Works have been satisfactorily completed by the Contractor as per the provisions of Contract.
b) The Contractor has cleared the Site of all the surplus materials, removed all scaffoldings, shuttering materials, labour huts/sheds, cleaned the dirt from Site, temporary sanitary and water supply arrangements and all electrical gadgets/ equipment/ switches, wiring, any wood work or any such item, as relevant to the Contract to the satisfaction of the Project Manager, except those required for carrying out rectification works.
c) All the defects have been rectified to the complete satisfaction of the Project Manager.

9.2.4. Issuance of such certificates shall not relieve the Contractor of any of his obligations which otherwise were to be complied with under the terms and conditions of the Contract.

9.2.5. Notwithstanding the above-mentioned provisions, the issuance of TOC shall not be held up due to a delay in completion/ rectification of works of minor nature that do not affect the performance/ use of the Works. In such a case the Contractor shall, however, be required to give an undertaking stating that in case he fails to complete/rectify the defects within a mutually agreed period, Employer shall be at liberty to carry out the work at his risk and cost, and deduct an amount as may be considered appropriate by Employer.

9.2.6. Issuance of TOC for any part of the Works is only for the purpose of facilitating the Contractor to receive the payment for part of the Works completed and for determination of liquidated damages in respect thereof and shall not relieve the Contractor of his responsibilities under the Contract towards other parts of the Works.

9.2.7. At the time of taking over the work, the Project Manager shall ensure that the Contractor constructs a permanent information board as specified in SCC.

9.3. Operating and Maintenance Manuals

9.3.1. If "as built" Drawings and/or operating and maintenance manuals are required, the Contractor shall supply them by the dates stated in the SCC.

9.3.2. If the Contractor does not supply the Drawings and/or manuals by the dates stated in the SCC, or they do not receive the Project Manager's approval, the Project Manager shall withhold the amount stated in the SCC from payments due to the Contractor.

10. Defects

10.1. Correction of Defects

10.1.1. The Project Manager shall check the Contractor's work and notify the Contractor of any Defects that are found. The Project Manager shall give notice to the Contractor of any Defects before the end of the Defects Liability Period (DLP), which begins at Completion, and is defined in the SCC. Every time notice of a Defect is given; the Contractor shall correct the notified Defect within the length of time specified by the Project Manager's notice.

10.2. Uncorrected Defects

10.2.1. If the Contractor has not corrected a Defect within the time specified in the Project Manager's notice, the Project Manager shall assess the cost of having the Defect corrected, and the Contractor shall pay this amount to the Employer. At the option of the Employer, payment of such costs may be made in whole or in part by the Employer deducting and keeping for itself appropriate amounts from the Retention Money and/or claiming against any bank guarantee provided by the Contractor.

10.2.2. Defects Liability Period shall be extended for as long as the defects remain to be corrected.

10.3. Defect Liability

10.3.1. If during the Defect Liability Period any defect is found in the design, engineering, materials and workmanship of the Works executed by the Contractor, the Contractor shall promptly, in consultation and agreement with Employer regarding appropriate remedying of the defects, and at its cost, repair, replace or otherwise make good such defect as well as any damage to the Works caused by such defect.

10.3.2. The Defect Liability Period shall be as specified in the SCC. Where any part of the Works is taken over separately, the Defects Liability Period for that part shall commence on the date it was taken over.

10.3.3. If the Contractor fails to commence the work necessary to remedy such defect or any damage to the Works caused by such defect within fifteen (15) days of the intimation of the defect, and complete the remedying of such defect within the time specified by Employer, Employer reserves the right to get such work done in a manner as mentioned hereunder:

a) carry out the work himself or by others, in a reasonable manner and at the Contractor's cost, but the Contractor shall have no responsibility for the work. The Contractor shall pay to Employer the costs reasonably incurred by Employer in remedying the defect or damage;

b) require the Project Manager to agree or determine a reasonable reduction in the Contract Price; or

c) if the defect or damage deprives Employer of substantially the whole benefit of the Works or any major parts of the Works, Employer may terminate the Contract as a whole, or in respect of such major part, which cannot be put to the intended use. Without prejudice to any other rights, under the Contract or otherwise, Employer shall then be entitled to recover all sums paid for the Works or for such part (as the case may be), plus financing costs and the cost of dismantling the same, clearing the site and returning plant and materials to the Contractor.If the Works or any part thereof cannot be used by reason of such defect and/or making good of such defect, the Defect Liability Period of the Works or such part, as the case may be, shall be extended by a period equal to the period during which the Works or such part cannot be used by Employer because of any of the aforesaid reasons. Upon correction of the defects in the Works or any part thereof by repair/replacement, such repair/replacement shall have the Defect Liability Period for a period of twelve (12) months from the time such replacement/repair of the Works or any part thereof has been completed.

10.3.4. On completion of the Defect Liability period of the whole of the Works or where Works have been taken over in parts, Employer shall issue a Defect Liability Certificate to the Contractor certifying the successful completion of defect liability period.

11. Measurement and Valuation

11.1. Except as otherwise stated in the Contract and notwithstanding local practice:

11.1.1. Measurement shall be made of the net actual quantity of each item of the Works, and

11.1.2. The method of measurement shall be in accordance with the BoQ, technical specifications or other applicable schedules.

11.2. Whenever Employer requires any parts of the Works to be measured, reasonable notice shall be given to the Contractor's representative, who shall:

11.2.1. Promptly either attend or send a qualified representative to assist the Project Manager in making the measurement, and

11.2.2. Supply any particulars requested by Project Manager.

11.3. If the Contractor fails to attend or send a representative, the measurement made by (or on behalf of) Employer shall be accepted as accurate.

11.4. Except as otherwise stated in the Contract, wherever any Works are to be measured from records, these shall be prepared by Employer. The Contractor shall, as and when requested, attend to examine and agree with the records with Employer, and shall sign the same when agreed. If the Contractor does not attend, the records shall be accepted as accurate.

11.5. If the Contractor examines and disagrees with the records, and/or does not sign them as agreed, then the Contractor shall give notice to Employer citing the reasons/basis for the records to be allegedly inaccurate. After receiving this notice, Employer shall review the records and either confirm or vary them. If the Contractor does not so give notice to Employer within fourteen (14) days after being requested to examine the records, they shall be accepted as accurate.

12. Variations and Adjustments

12.1. Contract Price Adjustment

12.1.1. The regulation and payment of Contract Price Adjustment under the Contract shall be governed by the provisions specified in the Bidding Documents. The Contract Price as awarded shall be the base Contract Price. A certain fixed percentage of the base Contract Price shall not be subject to any Contract Price Adjustment. The balance percentage to be specified shall be of identified components towards labour, material(s) and H.S. diesel oil, hereinafter called the variable component, shall be subject to Contract Price Adjustment.

12.1.2. The fixed component and the variable components shall be specified in SCC. The amount of Contract Price Adjustment payable/ recoverable for the work done during the relevant period shall be calculated as under:

CPA = ACP - BCP

Where,

CPA = Control Price Agreement

BCP = Base Contract Price

ACP = Adjusted Contract Price

ACP shall be computed as under:

$$ACP = BCP * \left|F + \frac{l * L_1}{L_0} + \frac{m * M_1}{M_0} + \frac{m * M_2}{M_0}\right|$$

F+l+m = 1

Where:

F = Fixed component expressed in percentage of the Base Contract Price which shall not be subject to any adjustment as quantified and stipulated in the SCC, generally 20%.

L = Labour component expressed in percentage of the Base Contract Price which shall be subject to Price Adjustment as quantified and stipulated in the SCC, generally up to 15% to 30%

M = Material component expressed in percentage (excluding material issued by Employer) of the Base Contract Price which shall be subject to Price Adjustment as quantified and stipulated in the SCC, generally 30% to 60%

L = Labour Index

M = Material Index

SUBSCRIPT

'0' = refers to the value of the above-mentioned labour/ material indices as on thirty (30) days prior to the Bid opening date.

'1' = refers to the value of the corresponding labour / material indices as applicable for the preceding month in which the work is executed for which the adjustment is applicable, respectively.

12.1.3. The total amount payable on the Base Contract Price on account of the Contract Price Adjustment as indicated in above shall not exceed the maximum of twenty percent (20%) of the Contract Price as awarded.

12.1.4. Contract Price Adjustment(s) shall be calculated for the value of Works executed for the billing month as per agreed work schedule. For the purpose of payment/recovery of Price Adjustments, such payment/refund shall be operative and payable in accordance with the schedule completion period (including authorized extensions, if any) or actual completion period, whichever is earlier. Provided further that the Contractor would be eligible for such price adjustment claims or shall be liable for refund on the quantum of Works scheduled or the actual quantum of Works done provided always that the work done is more than or equal to the scheduled of work as per agreed work schedule.

12.1.5. The Contractor shall not be eligible for the payment of the price adjustment claims or liable for refund of Contract Price adjustment for the period beyond the schedule date of execution of Works if the Works has been delayed beyond the scheduled date(s) for reasons attributable to the Contractor. However, for quantities of Works executed beyond

the scheduled dates of execution, the Contractor would be liable for refund of Contract Price Adjustment(s) for such delayed Work based on the value of the indices as applicable to the scheduled dates of execution, provided that if the indices of the actual dates of execution are lower than the indices as on scheduled dates of execution, then lower indices shall be applicable. In cases where the execution of Works is delayed for reasons attributable to Employer, the Contractor shall be eligible for payment or refund of price adjustment on such delayed execution of Works based on the indices prevailing as on the date of execution of such Works.

12.1.6. Rates of items included in the Bill of Quantities, whose quantities have varied beyond the permissible deviation limits and rates of extra items, derived and agreed from items included in the Bill of Quantities shall also be subject to price adjustment as per this clause.

12.1.7. The Contractor shall, every month after commencement of the Works, submit to the Project Manager a written notice of the changes, if any, that have occurred in the specified indices of Materials, and Labour or that of Diesel price, etc. during the previous reporting period containing the effective date of such change, with authenticated documentary evidence of the relevant applicable published indices / diesel price, etc.

12.1.8. Monthly bills for Contract Price Adjustment shall be made by the Contractor commencing first, from the month when all the relevant/ applicable indices/ diesel prices are available and not later than fifteen (15th) day of every month thereafter. The period for processing and making payment for these bills shall also be governed by the provisions as applicable to on-account/ progressive interim payments.

12.2. Change in Works

12.2.1. Introducing a Change

Employer shall have the right to propose, and subsequently require, that the Project Manager order the Contractor from time to time during the performance of the Contract to make any change, modification, addition or deletion to, in or from the Works in the form, quantity or quality of the Works or any part thereof (hereinafter called "Change"), provided that such Change falls within the general scope of the Works and does not constitute unrelated work and that it is technically practicable, taking into account both the state of advancement of the Works and the technical compatibility of the Change envisaged with the nature of the Works as specified in the Contract. Such changes shall include but not be limited to the following:

a) Increase or decrease in the quantity of any work included in the Contract;

b) Omission, insertion, or substitution of any item of work;

c) Change in the drawings, designs, specifications, character or quality or kind of any such work;

d) Change in the levels, lines, positions and dimensions of any part of the Works;

e) Additional work of any kind necessary for the completion of the Works;

f) Change in any specified sequence, method or timing of construction of any part of the Works.

12.2.2. Employer shall make any such variations by issuing written instructions to the Contractor and shall ensure that such variations are duly noted by the Contractor and the Project Manager. A variation made shall not, in any way, vitiate or invalid the Contract, but the effect, if any, of such variations shall be valued.

12.2.3. The Contractor shall execute and be bound by each variation, unless the Contractor promptly gives notice to Employer stating (with supporting particulars and documents) that (i) the Contractor cannot readily obtain the goods and materials required for the variation, or (ii) such variation triggers a substantial change in the sequence of the progress of the on-going works. Upon receipt of such a notice, Employer shall cancel, confirm or vary the instructions.

12.2.4. The Contractor may from time to time during its performance of the Contract, propose to Employer (with a copy to the Project Manager) any Change that the Contractor considers necessary or desirable to improve the quality, efficiency or safety of the Works. Employer may at its discretion approve or reject any Change proposed by the Contractor.

12.2.5. Notwithstanding 012.2.1 and 12.2.2 12.2.1(b), change made necessary because of any default of the Contractor in the performance of its obligations under the Contract shall not be deemed to be a Change, and such change shall not result in any adjustment of the Contract Price or the Time for Completion.

12.3. Variations in Contract

12.3.1. The Contractor shall be under obligation to agree for the Changes as may be required during the execution of the Contract as per directions of the Project Manager and execute such changes at the same rates included in the Contract, provided the total effect of such changes does not exceed the limit of plus/minus twenty percent (+-20%) of the Contract Price. Such ceiling shall however be applicable only for items of work for which rates are provided in the Contract. Notwithstanding the aforesaid provision, the quantities for individual items, if specified in the Contract, can vary to any extent. No claim for revision of rates for any individual item in the Bill of Quantities shall be admissible irrespective of the extent to which the ordered quantity may get revised (+) or (-) during the actual execution of the Works. For Change beyond twenty percent (20%) of the Contract Price, the adjustment in the rates for Bill of Quantity items shall be made as per GCC.12.4. The procedure on how to proceed with and execute Changes is specified in GCC.12.4.

12.4. Adjustment of the Contract Price

12.4.1. If reduction or increase in the Contract Price due to Change is found to be more than twenty percent (20%) of the Contract Price, the Contract Price shall be adjusted as per the rates below:

Variation in value of Work	Increase in payment for minus variation	Decrease in payment for plus variation
Up to 20%	Nil	Nil
Above 20% & up to 35%	6.00%	3.00%
Above 35% & up to 60%	8.00%	4.00%
Above 60% & up to 100%	10.00%	5.00%
Above 100%		5.00%

12.4.2. While working out the value of work for the purpose of variation, the extra items for which new rates have been paid and payment towards price adjustment; and the adjustment towards statutory variations shall not be considered.

Illustration:

a. In case of variation in value of work by (plus) + sixty percent (60%), the payment for (60-20) percent, i.e., forty percent (40%) of value of work shall be decreased by four percent (4%). The reduction in Contract rates shall commence as soon as the value of work executed reaches 120% of Contract Price.
Award Value (AV)=100
Executed Value (EV)=160
Variation=+ 60%
Final Payable= EV-((60-20) %*(4%*160))
=160-((40%*(4%*160)) =160-2.56=157.44

b. In case of variation in value of work by (minus) – fifty-five percent (55%), the payment for (45-20) percent i.e., twenty-five percent (25%) of value of work shall be increased by eight percent (8%).
A=Award Value (AV) =2013935.35
B=Executed Value (EV) =1164731.44
C=Decrease in value of work (B-A) = 849,203.91
D=% decrease in value of work (C/A%) = -42.17%
E=% increase in payment on plus variation of -42.17% based on variation slab=8%
F=Amount on which 8% increase in payment will be applied (42.17%- 20%) *A=446,489.47
G=Decrease in payment (E%*F) =35,719.16
Final payable=B+G=12, 00,450.60

12.4.3. The Contractor within fifteen (15) days from the receipt of an order to execute any extra item shall submit rate analysis to the Project Manager supported by documentary evidence of basic rates adopted therein; having regard to the cost of materials, actual wages of labour, and other operational costs. The analysis so provided by the Contractor shall form the basis for determination of rates for such extra items. Extra items of work which are not provided in the Bill of Quantities shall be paid on the basis of Bhutan Schedule of Rates (BSR) after adjusting such rates for the place of Works and time period elapsed after the date of BSR. If rates for such extra items are not available in BSR, the rates for such items shall be determined based on the actual expenditure relating to that item including cost of materials, fabrication/machinery handling and erection at site plus twenty percent

(20%) towards overheads including profits. The price of varied items determined by the Project Manager shall be final and binding on the Contractor. No payment shall be made for the items of Works ordered to be omitted.

12.4.4. If there is delay in Employer and the Contractor coming to an agreement on the rate of varied work, provisional rates at the rate of seventy-five percent (75%) of the rates as determined by Employer shall be payable till such time as the rates are finally determined. In any case, Employer shall decide the rates within a maximum period of forty-five (45) days from the date of submission for the analysis of rates by the Contractor.

12.4.5. Items of work for which rates have been derived shall be eligible for price adjustment as per the price adjustment formula with base date as per the Contract. Rates for extra items, derived as per GCC.0 above, shall be eligible for price adjustment as per the price adjustment formula with base date corresponding to the date of input costs considered for working out the rates.

12.5. Day Work

12.5.1. For work of a minor or incidental nature not covered in the Bill of Quantities, the Project Manager may instruct that a Change shall be executed on a daywork basis.

12.5.2. The Contractor shall deliver each day to the Project Manager accurate statements in duplicate which shall include the following details of the resources used in executing the previous day's work:

a) the names, occupations and time of Contractor's employees;

b) the identification, type and time of Contractor's Equipment and temporary works; and

c) the quantities and types of plant and materials used.

12.5.3. One copy of each statement shall, if correct, or when agreed, be signed by the Project Manager and returned to the Contractor. The Contractor shall then submit priced statements of these resources to the Project Manager for further approval and inclusion in the next running bill for payment.

12.6. Record of costs

12.6.1. In any case where the Contractor is instructed to proceed with a variation prior to the determination of the adjustment to the Contract Price in respect thereof, the Contractor shall keep records of the cost of undertaking the variation and of time expended thereon. Such records shall be open to inspection by the Project Manager at all reasonable times.

12.7. Change in Laws and Regulations

12.7.1. If, after the date seven (7) days prior to the last date of Bid submission, any law, regulation, ordinance, order or by-law having the force of law is enacted, promulgated, abrogated or changed in the Kingdom of Bhutan (which shall be deemed to include any change in interpretation or application by the competent authorities) that subsequently affects the costs and expenses of the Contractor and/or the Time for Completion, the Contract Price shall be correspondingly increased or decreased, and/or the Time for Completion shall be reasonably adjusted to the extent that the Contractor has thereby been affected in the performance of any of its obligations under the Contract. However, these adjustments would be restricted to direct transactions between Employer and the Contractor. These adjustments shall not be applicable on procurement of raw materials, intermediary components etc. by the Contractor of foreign Contractor and shall also not be applicable on the bought-out items dispatched directly from sub-vendor's works to site. Notwithstanding the foregoing, such additional or reduced costs shall not be separately paid or credited if the same has already been accounted for in the price adjustment provisions where applicable, in accordance with clause GCC 12.2 hereunder.

13. Contract Price and Payment

13.1. Contract Price

13.1.1. The Contract Price shall be as specified in the Contract Agreement subject to any additions and adjustments thereto or deductions therefrom as may be made pursuant to the Contract. If specified in the SCC, the Contract Price shall be adjusted.

13.1.2. The Contract Price charged by the Contractor for the performance of the Works shall not vary from the prices quoted by the Contractor in its Bid, with the exception of any price adjustments as per the provisions of the Contract specified in the SCC.

13.1.3. Subject to 2.3.12.3.1 and GCC16.1(h) hereof, the Contractor shall be deemed to have satisfied itself as to the correctness and sufficiency of the Contract Price, which shall, except as otherwise provided for in the Contract, cover all its obligations under the Contract.

13.2. Advance Payment

13.2.1. Mobilization Advance

a) Employer may provide for payment of interest free mobilization advance of a maximum ten (10) percent of the Contract price on request from the Contractor, if the payment of mobilization advance is stated in the SCC.

b) Together with the request for mobilization advance, the Contractor shall submit an unconditional bank guarantee for an equivalent amount of advance requested in accordance with the Contract agreement.

c) The advance shall be recovered through proportionate/percentage deductions from payments made to the Contractor. All advances shall be fully recovered by the time eighty percent (80%) of the Contract is executed.

13.2.2. Secured Advance

a) If stated in the SCC, Employer may provide for payment of secured advance to the Contractor against the construction materials brought to the work site as per the Contract agreement and verified by the Project Manager. The list of materials and the quantities not liable for secured advance if any, shall be specified in the SCC. In exceptional circumstances if specified in SCC, secured advance shall be given on account of plants &machineries.

b) The payment of the secured advance shall be based on the following conditions:

a. The materials shall be in accordance with the specifications and shall not be in excess of the requirements;

b. A declaration shall be given by the Contractor passing on the lien on the rights of the materials to the Employer. However, the materials delivered at work site, shall be properly stored and protected against loss, damage or deterioration by the Contractor;

c. The amount of the secured advance shall not be more than seventy-five (75%) of the cost of materials delivered at the site of works, which shall be supported by the original invoices/bills. All materials imported from other countries shall be supported by Bhutan Sales Tax receipts or customs clearance. In case of fabrication works off site, secured advance may be paid to the Contractor after site inspection is carried out by the Procuring Agency at the cost of the Contractor, submission of proof of payment and submission of workorder;

d. The advance shall be recovered through proportionate/percentage deductions from payments made to the Contractor. All advances shall be fully recovered by the time eighty percent (80%) of the Contract is executed.

13.3. Terms of Payment

13.3.1. The Contract Price shall be paid as specified in the Contract:

a) The Contractor's request for payment shall be made to Employer in writing accompanied by invoices and documents, describing, as appropriate, the work done and related services performed in fulfilment of the obligations stipulated in the Contract.

b) Payment shall be made promptly by Employer, no later than 30 (thirty) days after the receipt of bills and documents in accordance with GCC 13.3.1(a), provided that the documents are compliant with all the requirements of Employer.

c) No payment made by Employer herein shall be deemed to constitute acceptance by Employer of the works or any part(s) thereof.

d) The currency or currencies in which payments are made to the Contractor under this Contract shall be those in which the Contract Price is expressed in the Contractor's Bid. In cases where the Bid price is in Indian Rupees or Bhutanese Ngultrum, Employer shall at its discretion make payment in either of the currencies at the exchange rate of one Ngultrum = one Indian Rupees.

e) Wherever applicable, the release of first progressive interim payment shall be subject to submission of documentary evidence by the Contractor towards having taken the insurance policy (ies) and acceptance of the same by the Project Manager.

13.4. Taxes and Duties

13.4.1. The prices bid by the Contractor shall include all duties, taxes, and levies that may be levied in accordance with the laws and regulations in force as of the date 30 days prior to the closing date for submission of Bids. As such, except as otherwise specifically provided in the Contract, the Contractor shall bear and pay all taxes, duties, levies and charges assessed on the Contractor, its subcontractors or their employees by all municipal, state or national government authorities in connection with the Works in and outside of the Kingdom of Bhutan.

13.4.2. At the time of release of payment, tax shall be deducted at source (TDS) from Bhutanese Bidders and International Bidders as specified in the SCC from the gross amount of bills. Employer shall furnish necessary TDS Certificate to the Bidders, issued by the Department of Revenue & Customs, RGoB. The Contractor shall be responsible to deduct tax at source from the gross payments made to the sub-Contractors and deposit the same to the account of RGoB as per provisions of law in this regard in force from time to time.

13.4.3. If any rates of taxes or levies are increased or decreased, a new tax or levy is introduced, an existing tax is abolished, or any change in interpretation or application of any tax occurs in the course of the performance of Contract, an equitable adjustment of the Contract Price shall be made to fully take into account any such change by addition to the Contract Price or deduction therefrom, as the case may be.

13.4.4. The Contractor's staff, personnel and labour shall be liable to pay personal income tax in Bhutan in respect of such of their salaries and wages as are chargeable under the laws and regulations in force and the Contractor shall perform such duties with regard to such deductions thereof as may be imposed on him by such laws and regulations.

13.5. Retention Money

13.5.1. The Employer shall retain ten percent (10%) from each payment due to the Contractor in the proportion stated in the SCC until Completion of the whole of the Works as retention money.

13.5.2. The Retention Money may be returned to the Contractor upon issuance of No Defects Liability Certificate. After completion of the work, the Contractor may substitute the retention money with an unconditional bank guarantee, issued/enforceable by any financial institution in Bhutan. Such bank guarantee shall be valid until the completion of Defect Liability Period.

13.5.3. If the Contractor fails to remedy any reported defect within the Defects Liability Period, Employer shall withhold the payment or realize claims from the Retention Money, of an amount, which in the opinion of Employer, represent the cost of the defects to be remedied.

13.5.4. On completion of the Defects Liability Period, the Project Manager shall issue a no Defect Liability Certificate to the Contractor and release the retention money and/ or bank guarantee as available within fifteen (15) days from the issue of such certificate.

14. Termination

14.1. Termination for Employer's Convenience

14.1.1. Employer shall at any time terminate the Contract for any reason by giving the Contractor (and a copy to the Project Manager) a sixty (60) days prior notice of termination that refers to this clause GCC 14.1.

14.2. Termination for Contractor's default

14.2.1. In situations/conditions defined below, Employer shall serve a notice to the Contractor highlighting the default/limitation on the part of the Contractor and advising the Contractor to take appropriate corrective/remedial measures. If the Contractor fails to correct or to take steps to remedy the faults/limitations within fourteen (14) days of the notice served by Employer, Employer may, without prejudice to any other rights it may possess, terminate the Contract forthwith by giving a fifteen (15) days prior notice of termination with a copy to the Project Manager and its reasons thereof to the Contractor, referring to this clause GCC 14.2.1.

a) If the Contractor becomes bankrupt or insolvent, has a receiving order issued against it, compounds with its creditors, or, if the Contractor is a corporation, a resolution is passed or order is made for its winding up (other than a voluntary liquidation for the purposes of amalgamation or reconstruction), a receiver is appointed over any part of its undertaking or assets, or if the Contractor takes or suffers any other analogous action in consequence of debt;

b) If the Contractor assigns or transfers or sub-Contracts the Contract in whole or in part or any right or interest therein in violation of the provision of 1.51.5.1;

c) If the Contractor, in the judgement of Employer has engaged in fraud or corruption, as defined in 1.31.6 in competing for or in executing the Contract;

d) If the Contractor has abandoned or repudiated the Contract for more than 30 days;

e) If the Contractor has, without valid reasons, failed to commence the Works promptly or has suspended (other than pursuant to 14.5.414.5.4) the progress of Contract performance for more than twenty-eight (28) days after receiving a written instruction from Employer to proceed;

f) If the Contractor persistently fails to execute the Contract in accordance with the Contract or persistently neglects to carry out its obligations under the Contract without just cause and does not make good such failure or neglect within reasonable period even after a written notice by the Project Manager;

g) If the Contractor refuses or is unable to provide required/sufficient materials, services, equipment or manpower to execute and complete the Works in the manner specified in the program furnished under 3.143.14.1 at rates of progress that give reasonable assurance to Employer that the Contractor can attain completion of the Works by the Time for Completion as extended;

h) If the liquidated damages to be levied in terms of the provisions under GCC 8.4.1 has reached a maximum of ten percent (10%) of the Contract Price and it appears to the Project Manager that the Contractor is unable to complete the Works.

14.2.2. Upon receipt of the notice of termination under GCC 14.1 and GCC 14.2, the Contractor shall, either immediately or upon such date as is specified in the notice of termination:

a) Cease all further work, except for such work as Employer may specify in the notice of termination for the sole purpose of protecting that part of the Works already executed, or any work required to leave the Site in a clean and safe condition;

b) Terminate all subcontracts, except those to be assigned to Employer pursuant to paragraph (d)(ii) below;

c) Remove all Contractor's Equipment from the Site, repatriate the Contractor's and its subcontractors' personnel from the Site, remove from the Site any wreckage, rubbish and debris of any kind, and leave the whole of the Site in a clean and safe condition;

d) In addition, the Contractor, subject to the payment specified in GCC.14.4, shall:

(i) Deliver to Employer the parts of the Works executed by the Contractor up to the date of termination;

(ii) To the extent legally possible, assign to Employer all right, title and benefit of the Contractor to the Works and to the plant, equipment or material as at the date of termination, and, as may be required by Employer, in any subcontracts concluded between the Contractor and its subcontractors;

(iii) Deliver to Employer all non-proprietary drawings, specifications and other documents prepared by the Contractor or its subcontractors as at the date of termination in connection with the Works.

14.2.3. Upon termination under GCC 14.2, Employer may expel the Contractor, and complete the Works itself or by employing any third party. Employer may, to the exclusion of any right of the Contractor over the same, take over and use any Contractor's equipment owned by the Contractor and at site in connection with the Works for such reasonable period, as Employer considers expedient for the completion of the work. However, in doing so, Employer shall pay a fair rental rate to the Contractor, bear all the maintenance costs and indemnify the Contractor for all liability including damage or injury to persons arising out of Employer's use of such equipment. Upon completion of the Works or at such earlier date as Employer thinks appropriate, Employer shall give notice to the Contractor that such Contractor's Equipment shall be returned to the Contractor at or near the Site and shall return such Contractor's Equipment to the Contractor in accordance with such notice. The Contractor shall thereafter without delay and at its cost remove or arrange removal of the same from the Site.

14.3. Termination by Contractor

14.3.1. The Contractor may terminate the Contract forthwith by giving a notice to Employer to that effect, referring to this clause 14.3.1, if Employer becomes bankrupt or insolvent, has a receiving order issued against it, compounds with its creditors, or, being a corporation, if a resolution is passed or order is made for its winding up (other than a voluntary liquidation for the purposes of amalgamation or reconstruction), a receiver is appointed over any part of its undertaking or assets, or if Employer takes or suffers any other analogous action in consequence of debt.

14.3.2. If the Contract is terminated under 14.3.1, then the Contractor shall immediately:

a) Cease all further work, except for such work as may be necessary for the purpose of protecting that part of the Works already executed, or any work required to leave the Site in a clean and safe condition;

b) Terminate all subcontracts, except those to be assigned to Employer pursuant to paragraph (d)(ii) below;

c) Remove all Contractor's Equipment from the Site and repatriate the Contractor's and its subcontractor's personnel from the Site;

d) In addition, the Contractor, subject to the payment specified in GCC 14.4, shall

(i) Deliver to Employer the parts of the Works executed by the Contractor up to the date of termination;

(ii) To the extent legally possible, assign to Employer all right, title and benefit of the Contractor to the Works and to the plant, equipment or materials as of the date of termination, and, as may be required by Employer, in any subcontracts concluded between the Contractor and its subcontractors;

(iii) Deliver to Employer all non-proprietary drawings, specifications and other documents prepared by the Contractor or its subcontractors as of the date of termination in connection with the Works.

14.4. Payment upon Termination

14.4.1. If the Contract is terminated because of a fundamental breach of Contract by the Contractor, the Project Manager shall issue a certificate for the value of the work done and Materials ordered less advance payments received up to the date of the issue of the certificate and less the percentage to apply to the value of work not completed, as indicated in the SCC. If the total amount due to the Employer exceeds any payment due to the Contractor, the difference shall be a debt payable by the Contractor to the Employer.

14.4.2. If the Contract is terminated for the Employer's convenience or because of a fundamental breach of Contract by the Employer, the Project Manager shall issue a certificate for the value of the work done, Materials ordered, the reasonable cost of removal of Equipment, repatriation of the Contractor's personnel employed solely on the Works, and the Contractor's costs of protecting and securing the Works, and less advance payments received up to the date of the certificate.

14.5. Suspension

14.5.1. Employer /Project Manager may, by notice to the Contractor, order the Contractor to suspend performance of any or all of its obligations under the Contract. Such notice shall specify the obligation of which performance is to be suspended, the effective date of the suspension and the reasons thereof. The Contractor shall thereupon suspend performance of such obligation (except those obligations necessary for the care or preservation of the Works) until ordered in writing to resume such performance by the Project Manager/ Employer.

14.5.2. If, by virtue of a suspension order given by the Project Manager/ Employer, the Contractor's performance of any of its obligations is suspended for an aggregate period of more than ninety (90) days, then at any time thereafter and provided that at that time such performance is still suspended, the Contractor may give a notice to the Project Manager requiring that Employer shall, within twenty-eight (28) days of receipt of the notice, order the resumption of such performance or request and subsequently order a Change in the Works in accordance with GCC 12.2, excluding the performance of the suspended obligations from the Contract.

14.5.3. If Employer fails to do so within such period, the Contractor may, by a further notice to the Project Manager, elect to treat the suspension, where it affects only a part of the

Works, as a deletion of such part of the Works in accordance with GCC 12.2 or, where it affects the whole of the Works, as termination of the Contract under 14.1.

14.5.4. Under the condition (a) and (b) below, the Contractor may, by giving fourteen (14) days' notices to Employer suspend performance of all or any of its obligations under the Contract, or reduce the rate of progress:

a) If Employer has failed to pay the Contractor any sum due under the Contract within the specified period, or has failed to approve any invoice or supporting documents without just cause or commits a substantial breach of the Contract, the Contractor may give a notice to Employer that requires payment of such sum, requires approval of such invoice or supporting documents, or specifies the breach and requires Employer to remedy the same, as the case may be. If Employer fails to pay such sum, fails to approve such invoice or supporting documents or give its reasons for withholding such approval, or fails to remedy the breach or take steps to remedy the breach within fourteen (14) days after receipt of the Contractor's notice; or

b) If the Contractor is unable to carry out any of its obligations under the Contract for any reason attributable to Employer, including but not limited to Employer's failure to provide possession of or access to the Site or other areas in accordance with 2.3.2, or failure to obtain any governmental permit necessary for the execution and/or completion of the Works;

14.5.5. If the Contractor's performance of its obligations is suspended or the rate of progress is reduced pursuant to this clause GCC 14.5, then the Time for Completion shall be extended in accordance with GCC 8.3.1, and any and all additional costs or expenses incurred by the Contractor as a result of such suspension or reduction shall be paid by Employer to the Contractor in addition to the Contract Price, except in the case of suspension order or reduction in the rate of progress by reason of the Contractor's default or breach of the Contract.

14.5.6. During the period of suspension, the Contractor shall not remove from the Site any plant, equipment, material or any part of the Works or any Contractor's Equipment, without the prior written consent of Employer.

15. Care of the Works and Indemnities

15.1. Protection of Works

15.1.1. The Contractor shall have total responsibility for protecting the Works till it is finally taken over by Employer. No claim shall be entertained by Employer for any damage or loss to the Works and the Contractor shall be responsible for the complete restoration of the damaged works/equipment to its original condition to comply with the specification and drawings.

15.1.2. The Contractor shall, in connection with the Works, provide and maintain at his own cost all lights, guards, fencing and security when and where necessary or required by Employer or by any authority for the protection of the Works or for the safety and convenience of the public or others.

15.2. Copyright

15.2.1. The copyright of all drawings, documents and other materials containing data and information furnished to Employer by the Contractor shall remain vested in the Contractor, or, if they are furnished to Employer directly or through the Contractor by any third party, including suppliers of materials, the copyright in such materials shall remain vested in such third Party.

15.3. Confidential Information

15.3.1. Employer and the Contractor shall keep confidential and shall not, without the written consent of the other Party hereto, divulge to any third party any documents, data or other information furnished directly or indirectly by the other Party hereto in connection with the Contract, whether such information has been furnished prior to, during or following completion or termination of the Contract. Notwithstanding the above, the Contractor may furnish to its Sub-vendors such documents, data and other information as it receives from Employer to the extent required for the Sub-vendors to perform its obligations under the Contract, in which event the Contractor shall be under obligation to have a clause in the Contracts with their sub vendors regarding confidentiality similar to that provided herein.

15.3.2. Employer shall not use such documents, data and other information received from the Contractor for any purposes unrelated to the Contract. Similarly, the Contractor shall not use such documents, data and other information received from Employer for any purpose other than the design, procurement of plant and equipment, construction or such other work and services as are required for the performance of the Contract.

15.3.3. The obligation of a Party under 15.3.1 and 15.3.2 above, however, shall not apply to information that:

a) Employer or the Contractor needs to share with the RGoB;

b) Is already in public domain now, or enters the public domain during the execution of the Contract through no fault of that Party;

c) Can be proven to have been possessed by that Party at the time of disclosure and which was not previously obtained, directly or indirectly, from the other Party; or

d) Otherwise lawfully becomes available to that Party from a third party that has no obligation of confidentiality.

15.3.4. The above provisions of GCC 15.3 shall not in any way modify any undertaking of confidentiality given by either of the Parties hereto prior to the date of the Contract in respect of the performance of the Contract or any part thereof.

15.3.5. The provisions of GCC 15.3 shall survive completion or termination, for whatever reason, of the Contract.

15.4. Patent Indemnity

15.4.1. The Contractor shall, subject to Employer's compliance with 15.4.2, indemnify and hold harmless Employer and its employees from and against any and all suits, actions or administrative proceedings, claims, demands, losses, damages, costs and expenses of any nature, including attorney's fees and expenses, which Employer may suffer as a result of any infringement or alleged infringement of any patent, utility model, registered design, trademark, copyright or other intellectual property right registered or otherwise existing at the date of the Contract by reason of:

a) The execution of the Works by the Contractor or the use of the Works in the Kingdom of Bhutan; and

b) The sale in any country of the products produced by the Works.

15.4.2. Such indemnity shall not cover any use of the Works or any part thereof other than for the purpose indicated by or reasonably to be inferred from the Contract, neither any infringement resulting from the use of the Works or any part thereof, or any products produced thereby in association or combination with any other equipment, plant or materials not supplied by the Contractor, pursuant to the Contract.

15.4.3. If any proceedings are brought or any claim is made against Employer arising out of the matters referred to in 15.4.1, Employer shall promptly give the Contractor notice thereof, and the Contractor may at its own expense and in Employer's name conduct such proceedings or claims and any negotiations for the settlement of any such proceedings or claims.

15.4.4. If the Contractor fails to notify Employer within thirty (30) days after receipt of such notice that it intends to conduct any such proceedings or claims, then Employer shall be free to conduct the same on its own behalf at the cost of the Contractor.

15.4.5. Employer shall, at the Contractor's request, provide all available assistance to the Contractor in conducting such proceedings or claim, and shall be reimbursed by the Contractor for all reasonable expenses incurred in so doing.

15.4.6. Employer shall indemnify and hold harmless the Contractor and its employees from and against any and all suits, actions or administrative proceedings, claims, demands, losses, damages, costs and expenses of any nature, including attorney's fees and expenses, which the Contractor may suffer as a result of any infringement or alleged infringement of any patent, utility model, registered design, trademark, copyright or other intellectual property right registered or otherwise existing at the date of the Contract arising out of or in connection with any design, data, drawing, specification or other documents or materials provided or designed by or on behalf of Employer.

15.5. Limitations of Liability

15.5.1. In cases of gross negligence or willful misconduct:

a) Neither Party shall be liable to the other Party, whether in Contract, tort or otherwise, for any indirect or consequential loss, damage, loss of use, loss of production, or loss of profits or interest costs. However, this exclusion shall not apply to any obligation of the Contractor to pay liquidated damages to Employer; and

b) The aggregate liability of the Contractor to Employer, whether under the Contract, in tort or otherwise, shall not exceed the total Contract Price. However, this limitation shall not apply to the cost of repairing or repairing defective works, or to any obligation of the Contractor to indemnify Employer with respect to patent infringement.

15.5.2. In all cases, the Party claiming a breach of Contract or a right to be indemnified in accordance with the Contract shall be obliged to take all reasonable measures to mitigate the loss or damage.

15.6. Indemnification Employer

15.6.1. The Contractor shall indemnify and hold harmless Employer and its employees from and against any and all suits, actions or administrative proceedings, claims, demands, losses, damages, costs, and expenses of whatsoever nature, including attorney's fees and expenses, in respect of the death or injury of any person or loss of or damage to any property (other than the Works whether accepted or not), arising in connection with the execution of Works and caused due to the negligence of the Contractor or its subcontractors, or its employees, or agents. For any injury, death or damages to property caused by the negligence of Employer, its other Contractors, employees, or agents Employer shall be responsible.

15.6.2. If any proceedings are brought or any claim is made against Employer that might subject the Contractor to liability under 15.6.1, Employer shall promptly give the Contractor a notice thereof and the Contractor shall at its own expense and in the Employer s name conduct such proceedings or claim and any negotiations for the settlement of any such proceedings or claim.

15.6.3. If the Contractor fails to notify Employer within twenty-eight (28) days after receipt of such notice that it intends to conduct any such proceedings or claim, then Employer shall be free to conduct the same on its own behalf. Unless the Contractor has so failed to notify Employer within the twenty-eight (28) day period, Employer shall make no admission that may be prejudicial to the defense of any such proceedings or claim.

15.6.4. Employer shall, at the Contractor's request, afford all available assistance to the Contractor in conducting such proceedings or claim, and shall be reimbursed by the Contractor for all reasonable expenses incurred in so doing.

15.6.5. Employer shall indemnify and hold harmless the Contractor and its employees and subcontractors from any liability for loss of or damage to property of Employer, other than the Works not yet taken over, that is caused by fire, explosion or any other perils, in

excess of the amount recoverable from insurances procured under GCC.17, provided that such fire, explosion or other perils were not caused by any act or failure of the Contractor.

15.6.6. The Party entitled to the benefit of an indemnity under this clause shall take all reasonable measures to mitigate any loss or damage, which has occurred. If the Party fails to take such measures, the other party's liabilities shall be correspondingly reduced.

16. Exceptional Event (Force Majeure)

16.1. "Force Majeure" shall mean any unavoidable event beyond the reasonable control of Employer or of the Contractor, as the case may be, and which has impeded the progress of work unreasonably and shall include, without limitation to the following:

a) War, hostilities or warlike operations whether a state of war be declared or not, invasion, act of foreign enemy and civil war;

b) Rebellion, terrorism, revolution, sabotage by persons other than the Contractor's personnel, insurrection, mutiny, usurpation of civil or military government, conspiracy, riot, civil commotion and terrorist acts;

c) Riot, commotion, disorder, strike or lockout by persons other than the Contractor's personnel;

d) Munitions of war, explosive materials, ionizing radiation or contamination by radio-activity, except as may be attributable to the Contractor's use of such munitions, explosives, radiation or radio-activity;

e) Confiscation, nationalization, mobilization, commandeering or requisition by or under the order of any government or de jure or de facto authority or ruler or any other act or failure to act of any government authority;

f) Embargo, import restriction, port congestion, industrial dispute, shipwreck, shortage or restriction of power supply, epidemics/pandemic, quarantine and plague;

g) Natural catastrophes such as earthquake, hurricane, typhoon, volcanic activity, fire, landslide or flood;

h) The physical conditions or artificial obstructions on the Site.

16.2. If a force majeure situation arises, the Bidder shall notify the Employer in writing within seven (7) days of such conditions and the cause thereof along with documentary or pictorial evidence acceptable to the Employer. Unless otherwise directed by the Employer in writing, the Bidder shall continue to perform its obligation.

16.3. The Party who has given such notice shall be excused from the performance or punctual performance of its obligations under the Contract for so long as the relevant event of Force Majeure continues and to the extent that such Party's performance is prevented, hindered or delayed. The Time for Completion shall be extended in accordance with GCC 8.3.

16.4. The Party or Parties affected by the event of Force Majeure shall use reasonable efforts to mitigate the effect thereof upon its or their performance of the Contract and to fulfil its or their obligations under the Contract so far as reasonably practicable.

16.5. Delay or non-performance by either Party hereto caused by the occurrence of any event of Force Majeure after the Contract has become effective shall not:

a) Constitute a default or breach of the Contract;

b) Give rise to any claim for damages or additional cost or expense occasioned thereby.

16.6. If the performance of the Contract is substantially prevented, hindered or delayed for a single period of more than sixty (60) days or an aggregate period of more than one hundred and twenty (120) days on account of one or more events of Force Majeure during the currency of the Contract, the Parties shall attempt to develop a mutually satisfactory solution, failing which the dispute shall be resolved in accordance with 2.

16.7. Notwithstanding 16.5, Force Majeure shall not apply to any obligation of Employer to make payments to the Contractor herein.

17. Insurance

17.1. The Contractor shall provide, in the joint names of the Employer and the Contractor, insurance cover from the date of commencement of the Works to the end of the respective periods specified below, in the amounts and deductibles stated in the SCC for the following events:

Sl.	Nature of insurance	Period of insurance coverage
i	Loss of or damage to the Works including Employer issued materials, if any	Up to the date of Taking Over of the last Works
ii	Loss of or damage to the Contractor's tools and plant	Up to the date of Taking Over of the last Works
iii	Loss of or damage to the property other than Works including those of third parties	Up to the completion of the Defects Liability Period
iv	Injury or death of personnel belonging to the Contractor, Employer or any other party	Upto the completion of the Defects Liability Period

The insurance policy for (iv) above shall be taken from Bhutanese insurance companies.

17.2. Policies and certificates for insurance shall be delivered by the Contractor to the Project Manager for the Project Manager's approval before the start date. All such insurance shall

provide for compensation to be payable in the types and proportions of currencies required to rectify the loss or damage incurred. Payments received from insurers shall be used for the rectification of loss or damage.

17.3. If the Contractor does not provide any of the policies and certificates required, the Employer may affect the insurance which the Contractor should have provided and recover the premiums the Employer has paid from payments otherwise due to the Contractor or, if no payment is due, the payment of the premiums shall be a debt due from the Contractor to the Employer.

17.4. Alterations to the terms of insurance shall not be made without the approval of the Project Manager. Both parties shall comply with any conditions of the insurance policies.

18. Claims

18.1. Contractor's Claims

18.1.1. If the Contractor considers himself to be entitled to any extension of the Time for Completion and/or any additional payment, under any clause of GCC.18 or otherwise in connection with the Contract, the Contractor shall give notice to Employer, describing the event or circumstances giving rise to the claim. The notice shall be given as soon as practicable, and not later than thirty (30) days after the Contractor became aware, or should have become aware, or the event or circumstance.

18.1.2. If the Contractor fails to give notice of a claim within such period of thirty (30) days, the Time for Completion shall not be extended, the Contractor shall not be entitled to additional payment, and Employer shall be discharged from all liability in connection with the claim. Otherwise, the following provisions of this sub-clause shall apply.

18.1.3. The Contractor shall also submit any other notices which are required by the Contract, and supporting particulars for the claim, as relevant to such event or Circumstances.

18.1.4. The Contractor shall keep such contemporary records as may be necessary to substantiate any claim, either on the Site or at another location acceptable to the Project Manager. Without admitting the Employer's liability, the Project Manager may, after receiving any notice under this sub-clause, monitor the record-keeping and/or instruct the Contractor to keep further contemporary records. The Contractor shall permit the Project Manager to inspect all these records, and shall (if instructed) submit copies to the Project Manager.

18.1.5. Within forty-two (42) days after the Contractor became aware (or should have become aware) of the event or circumstances giving rise to the claim, or within such other period as may be proposed by the Contractor and approved by the Project Manager, the Contractor shall send to the Project Manager a fully detailed claim which includes full supporting particulars of the basis of the claim and for the extension of time and/or additional payment claimed. If the event or circumstance giving rise to the claim has a continuing effect:

a) this fully detailed claim shall be considered as interim;

b) the Contractor shall send further interim claims at monthly intervals, giving the accumulated delay and/or amount claimed, and such further particulars as the Project Manager may reasonably require; and

c) the Contractor shall send a final claim thirty (30) days after the end of the effects resulting from the event or circumstances, or within such other period as may be proposed by the Contractor and approved by the Project Manager.

18.1.6. Within forty-two (42) days after receiving a claim or any further particulars supporting a previous claim, or within such other period as may be proposed by the Project Manager and approved by the Contractor, the Project Manager shall respond with approval, or with disapproval and detailed comments. He may also request any necessary further particulars, but shall nevertheless give his response on the principals of the claim within such time.

18.1.7. Each payment certificate shall include such amounts for any claim as have been reasonably substantiated as due under the relevant provision of the Contract. Unless and until the particulars supplied are sufficient to substantiate the whole of the claim, the Contractor shall only be entitled to payment for such part of the claims, as he has been able to substantiate.

18.1.8. The Project Manager shall proceed to determine (i) the extension (if any) of the Time for Completion (before or after its expiry), and/or (ii) the additional payment (if any) to which the Contractor is entitled under the Contract.

18.1.9. The requirements of this sub-clause are in addition to those of any other sub-clause, which may apply to a claim. If the Contractor fails to comply with this or any other sub-clause in relation to any claim, any extension of time and/or additional payment shall take account of the extent (if any) to which the failure has prevented or prejudiced proper investigation of the claim, unless the claim is excluded under the second paragraph of this sub-clause.

18.2. Claims towards idling of resources

18.2.1. Components of claim admissible hereunder towards additional cost incurred by the Contractor due to idling of resources in connection with execution of Contract for reasons given hereunder shall be evaluated by the Project Manager:

a) Employer does not give possession to Site or a part of the Site free of all encumbrances by the Site possession date stated in the SCC;

b) Employer modifies the schedule of other Contractors in a way which affects the works of the Contractor under the Contract;

c) Employer's representatives' does not issue Drawings, Technical Specifications or instructions required for the execution of Works as per agreed schedule;

d) Other Contractors or Employer does not work within the dates stated in the Contract that cause delay or extra work to the Contractor.

18.2.2. The evaluation of compensation towards idling of resources done by the Project Manager shall be final and binding on the Contractor. The procedure as provided in GCC.17.1 for settlement of claims shall also apply for such claims.

18.3. Early Warning

18.3.1. The Contractor shall warn the Project Manager in writing at the earliest of specific likely future events or circumstances that may adversely affect the quality of the work, increase the Contract Price or delay the execution of the Works. The Project Manager may require the Contractor to provide an estimate of theexpected effectofthefutureeventorcircumstanceontheContractPriceand CompletionDate.TheestimateshallbeprovidedbytheContractor not later than 30 days after the Contractor became aware, or should have become aware, of the event orcircumstance. If the Contractor fails to give notice of a claim within such period of 30 days, the Employer may be discharged from all liability in connection with theclaim.

19. Disputes and Arbitrations

19.1. Amicable Settlement

19.1.1. If any dispute of any kind whatsoever arises between Employer and the Contractor in connection with or arising out of the Contract, including without prejudice to the generality of the foregoing, any question regarding its existence, validity or termination, or the execution of the works – whether during the progress of the works or after their completion and whether before or after the termination, abandonment or breach of the Contract – the parties shall seek to resolve any such dispute or difference by mutual consultation.

19.2. Dispute Resolution

19.2.1. In case of dispute, the objecting party may file a written Notice of dispute to the other Party providing in detail the basis of the dispute. The Party receiving the Notice of Dispute shall consider it and respond in writing within 14 days after receipt. If that Party fails to respond within 14 days, or the dispute cannot be amicably settled within 14 days following the response of that Party, clause GCC.19.2.2 shall apply.

19.2.2. Any dispute between the Parties as to matters arising pursuant to this Contract that cannot be settled amicably according to clause GCC.19.2.1 and GCC.19.2.2 may be submitted by either Party for settlement in accordance with the provisions specified in the SCC.

19.2.3. Notwithstanding any reference to the settlement of dispute settlement herein:

a) The Parties shall continue to perform their respective obligations under the Contract unless they otherwise agree; and

b) Employer shall pay the Contractor any monies due to it.

SECTION V – SPECIAL CONDITION OF CONTRACT

SECTION V – SPECIAL CONDITIONS OF CONTRACT

Special Conditions of Contract

The following Special Conditions of Contract (SCC) shall supplement and/or amend the General Conditions of Contract (GCC). Whenever there is a conflict, the provisions herein shall prevail over those in the GCC. *[The Employer shall select and insert the appropriate wording using the sample below or other acceptable wording and delete the text in italics.]*

GCC Clause Ref., if any	Particulars
1.1.1 (xxvii)	The Project Manager shall be **Sr. Divisional Manager**, ESD Trongsa, BPC
1.1.1 (xxix)	The Site is located at various Gewog under Trongsa Dzongkhag (Nubi, Tangsibji, Draageteng, Langthel and Korphu Gewog) under ESD Trongsa
1.1.1 (xxxi)	Completion of Works shall be attained ***as tabulated below*** from the date of Site Handing Taking. **SN** — **Name of Works** — **Contract Duration** 1 — Package A: BOQ I O&M and Civil Works — 7 Months **2** — PackageA: BOQ II Plan Work — 7 Months
1.2.6 (a)	The applicable Incoterms edition shall be of: ***Not applicable.***
1.3.2	For notices, the addresses shall be: For the Employer: ***Sr. Divisional Manager*** *Electricity Services Division* *Distribution and Customer Services Department* *Bhutan Power Corporation Limited* *Trongsa: Bhutan* *Email address: esdtrongsa@bpc.bt*
2.3.4	The list of manpower, equipment, raw material etc. to be provided by the Employer: ***Not applicable.***
3.1.6	The information board shall ***not*** be required.
3.1.3 3.7.1	***The Contractor shall assume full responsibility for the adequacy and safety of site operations while carrying out clearing of jungle/ bushes and cutting of trees near the power lines and he shall adopt measures to prevent injuries to persons or damage to properties of utilities. The Contractor shall hold the Employer harmless from any liability for loss or damage resulting from his failures to take***

	the necessary precautions. The Contractor shall avoid undue interference with private business, public travel, or with the work of other Contractors. The Contractor shall take steps to protect the environment and to MINIMIZE NOISE, POLLUTION, FIREHAZARDS or any other undesirable effects resulting from his method of operation. ***The Contractor shall, throughout the execution and completion of the Works and the remedying of any defects therein:*** i. Take necessary precautions to avoid any electric hazards and put written request whenever line shutdown is required. ii. Provide necessary Personnel Protective Equipment's (PPE) to all the site staff and Compact have full regard for the safety of all persons under his control and ESD (BPC) shall not held any responsible for failure to put on required safety practice. iii. Provide and maintain at his own cost all lights, guards, fencing, warning signs and watching, when and where necessary or required by the Engineer/ Supervisor or by any duly constituted authority, for the protection of the Works or for the safety and convenience of the public and in view of general safety. iv. Take all reasonable steps to protect the environment on and off the Site and to avoid damage or nuisance to persons or to property of the public or other resulting from pollution, noise or other causes arising as a consequence of his method of operation. v. For Right of Way Clearing the O&M In-charge shall ensure to deploy one Lineman to supervise the work continuously and issue work permit/ shutdown permit and ensure safe working environment as per O&M manual 2012 till completion of the work vi. Contractor shall arrange to cut/ clear all bushes, trees and disbranching using necessary precautions and supports **(sag down is restricted unless emergency)** in order to minimize damages to power infrastructures, government and private properties. Any damages due to sheer negligence, the party has to bear all the expenses that may incur and compensate there off.
3.2.1	The amount of the Performance Security shall be **10% of the Quoted Contract Price.** **Differential Amount:** The contractor shall provide differential security in the form of cash warrant separately if the quoted amount of any bidders is 20% lower than BPC's estimate.
3.2.2	For Contracts not deducting retention money, the Contractor shall extend the validity of the performance security until 30 days beyond defect liability period (DLP) before the release of final bill payment: ***(Not applicable)***

3.2.3	The types of acceptable Performance Securities are: (i) Unconditional bank guarantee issued by a reputable financial institution enforceable in any banks in Bhutan, in the form provided for in the Contract or in any other form acceptable (ii) Cash warrant, or (iii) Demand Draft
3.12.1	The temporary utilities to be provided by Employer are: ***(Not applicable)***
5.1.1	Key Personnel: **1. Site Engineer/Supervisor** The amount to be deducted for the key personnel not employed by the Contractor for each personnel shall be: **Site Engineer/Supervisor – Nu.....per day** **Not applicable**
5.3.3	The amount to be deducted for the equipment not available at site is: ***Not applicable***
6	Materials required for the execution of the Contract are to be transported to the work sites by the Contractor at his own arrangements Transport the materials to the work sites in such a manner that materials required at the earliest will be first transported. If the Contractor fails to return the balance materials in full set of each item, the Contractor shall pay Employer's purchasing cost of the items plus 50% on the purchasing cost to the Employer. Final bills shall be released only after return of all balance materials. Any excess materials returned by the Contractor will not be taken by the Employer and paid for. And, if the Contractor is not able to return the balance materials within fifteen (15) days after physical completion of the works successfully, the Employer shall collect the balance materials at the cost and risk of the Contractor before releasing the final payment to the Contractor. However, the balance materials collected by the Employer in incomplete set shall be construed as lost or unreturned whereby its associated cost shall be deducted from any money payable to the Contractor.

8.4.1	The applicable rate for liquidated damages for delay shall be ***0.1% per day*** The maximum amount of liquidated damages shall be: ***10% of the Contract Price***
9.2.7	The permanent information board shall be: ***Not Applicable***
10.1.1, 10.3.2	The Defect Liability Period shall be ***12 months.***
12.1.2	***Not Applicable*** (for works with Duration less than **12 Months**)
13.1.1	The Contract Price **is not** adjustable.
13.2.1 (a)	The Mobilization Advance Payment shall be a maximum **of ten percent (10%) of the Contract Price** against the submission of unconditional bank guarantee issued by a reputable financial institution and enforceable by any Banks in Bhutan.
13.2.2 (a)	The secured advance ***shall not be Applicable***
13.4.2	The present rate of tax deducted at source (TDS) of the gross value of the invoice is ***2% or as per BPC's Financial Manual.***
17.1	The contractor shall be responsible for insurance & all payments thereof, for the work until the completed works are handed over to the employer, including

SN	Insurance	Amount Insured	Deductible
1	Loss of or damage to the Works including Employer issued materials, if any	110% of the cost of Works	Minimum as per insurance policy
2	Loss of or damage to the Contractor's tools and plant	110% of the cost of tools and plant	Minimum as per insurance policy
3	Loss of or damage to the property other than Works including those of third parties	As permissible under the policy	Not applicable
4	Injury or death of personnel belonging to the Contractor, Employer or any other party	As permissible under the policy	Not applicable

	<u>For Contracts with Bhutanese Contractors</u>
19.2.2	All disputes arising in connection with the present Contract shall be finally resolved by arbitration in accordance with the rules and procedures of the Alternate Dispute Resolution Act 2013.

SECTION VI – TECHNICIAL SPECIFICATION

Table of Contents

1. GENERAL 1
2. CONSTRUCTION OF OVERHEAD 33 KV, 11 KV AND LOW VOLTAGE LINES 2
2.1 General 2
2.2 Distribution line voltages, locations and clearances 2
2.2.1 Standard voltage for distribution system: 2
2.2.2 Choice of route 2
2.2.3 Approval of Line Routes 3
2.2.6 Overhead Line Clearances 4
2.2.7 Road Crossings 4
2.3 Construction, Testing and Commissioning 5
2.3.1 Alignment of the line 5
2.3.2 Erection of supports 5
2.3.3 Erection of DP Structures for angle locations 6
2.3.4 Special Foundation in Unstable Soil 6
2.3.5 Anchoring and providing guys for supports 6
2.3.6 Fixing of cross arms and insulators 7
2.3.7 Laying of AAAC/HV ABC/LV ABC/ACSR Conductor 8
2.3.8 Mid span jointing of conductors 8
2.3.9 Sagging and Tensioning of conductors 8
2.3.10 Conductors Sag and Tension 10
2.3.11 Supports at Different Elevation 13
2.3.12 Good Conductor Stringing Work Practices 14
2.3.13 Earthing of Distribution Lines 15
2.3.14 Final Completion and Commissioning 16
3. UNDERGROUND CABLE INSTALLATION 16
3.1 General Scope 16
3.2 Codes and Standards 16
3.3 Installation Work Scope 16
3.4 Earthing of Cables 23
3.5 Testing of Cables 24
4. INSTALLATION OF DISTRIBUTION TRANSFORMER SUBSTATIONS 24
4.1 Selection of Site 24
4.2 Installation of PAD Mounted Distribution Transformers 24
4.3 Fencing Arrangement ..... **Error! Bookmark not defined.**
4.4 Substation Earthing ..... **Error! Bookmark not defined.**
4.5 Transportation and Handling of Transformers 25
4.6 Substation Structure and Earthing 26
4.7 Protection of distribution transformers 26
4.8 Installation of Distribution/Mini Pillars 26
4.9 Connection of Supply to Consumer's Premises 26
4.10 Consumer Metering ..... **Error! Bookmark not defined.**
4.11 Direct Connected Metering ..... **Error! Bookmark not defined.**
4.12 CT Metering ..... **Error! Bookmark not defined.**
4.13 High Voltage Metering 27

1. General

All the works should be carried out strictly as per the Drawings, Specifications, etc. and as per the Contract document. Any modification/changes pertaining to the work should not be carried out without the prior written approval from the Employer. Any modification/changes done without the prior approval will be asked to be dismantled/demolished at the cost of the Contractor and the Employer will not be responsible for any cost whatsoever associated with the modification of works. All approval shall be in writing and no verbal approval will be entertained.

Prior to start of work, the Contractor is obliged to study the route and possible location of various poles, double pole, angle pole, transformers, etc. Any change in the route or modification should be at the approval of the Employer. The Scope of Works to be carried out under the Contract covers all the works associated with the:

a) Construction, testing and commissioning of 33 kV (Three phase and Two Phase), 11kV (Three Phase and Two Phase) and LT lines (Three Phase and Single Phase) including line route finalization, transportation of materials from designated stores to the Work site, erection of poles, fixing of insulators, line stringing, clamping, earthing, erection of anti-climbing devices, danger plates, painting of poles, etc.

b) Erection, testing and commissioning of distribution transformers including transportation of materials from designated Stores to sites, mounting of the transformers, distribution pillars, associated pole-top equipment like isolators, drop-out fuses, earthing work, etc.

c) Clearing jungles/bushes, trees and removal of branches and disposal; felling of trees including cutting of trunks and branches, and removal;

d) Materials required for the execution of the Contract shall be collected from the designated stores as specified under Article III, Clause 6 of Conditions of Contract.

The Bidder shall note that supply of sand, stone chips, cement, bricks, HT tiles, PVC tape, Ampere Tape, Welding rods, Hack saw blades, marking cloth, nuts & bolt and Aluminium lugs, paints, thinner, charcoal and salt for earthing, GI pipes & HDPE pipes (as specified in BoQ), and other miscellaneous material required for the construction work is in the Bidder's Scope. Bidder shall also note that any excess materials procured by the Bidder for the construction works will not be taken by the Employer.

The Bidder may contact the persons mentioned in Clause 3.3 of Section II- Instructions to Bidders, for detailed list of miscellaneous items required.

The work shall be carried out with full diligence and in accordance with the general guidelines listed herein. It is imperative/mandatory that the workers and the Supervisors

wear safety helmet, safety belts and other kits for their own safety. The Bidder shall note that the actual work associated with the construction of lines may vary with respect to the number of spans/poles (provided as an estimate of materials enclosed with this section) and the unit price per km quoted by the Bidder shall govern irrespective of the actual number of single/ double pole structures.

The survey work shall be carried out in close coordination with the Employer's Engineer and the line route and the pole locations, angle points, etc. finalized and approved by the Employer's Engineer. All the works associated with the erection shall be carried out under the general supervision of the Employer's Engineer/Supervisor.

2. Construction of Overhead 33 kV, 11 kV and low voltage lines

2.1 General

This section covers the procedures to be adopted during the construction of 33kV lines, 11kV lines, low voltage lines etc. Before start of construction works, the persons in charge shall familiarize with the line route and acquaint themselves with the Local Rules, so that necessary provisions there-of may be adopted.

2.2 Distribution line voltages, locations and clearances

2.2.1 Standard voltage for distribution system:

Proposed Medium Voltage (MV) construction:

33 kV Line (Three Phase, 3 wire)
11 kV Line (Three Phase, 3 wire)
Proposed Low Voltage (LV) construction

LV Line (Three phase, 4 wire, 415 Volts)
LV Line (Single phase, 2 wire, 240 Volts)

2.2.2 Choice of route

The route selected for the proposed overhead line should be the one that will give the lowest cost over the life of the line. Route selection therefore involves consideration of a number of factors, including the cost of landowner compensation, the cost of transporting materials to the site, construction cost and the cost of ongoing maintenance requirements including vegetation control. As a general rule, line routes should be as short as practicable and should run as close to a road as possible since this facilitates access for both construction and maintenance. Consideration should also be given to the location of possible future line extensions, either to supply potential new loads or to service towns/villages.

Where possible, line routes should avoid steep hills or valleys, swamps, lakes, thick forests, rivers or other locations where access is difficult or long spans are required. When building along a road, pole positions should not cause a traffic hazard or be in locations where there is a higher probability of vehicle impact.

The following should be avoided wherever possible:

a) Areas likely to be used for future urban development;
b) Routes incorporating sharp changes in line direction;
c) Routes close to aerodromes;
d) Religious monuments;
e) Special trees of religious significance;
f) School playgrounds;
g) Cemeteries;
h) Buildings containing explosives;
i) Taking lines through individual/private plots; and
j) Not considering the aesthetic of the land use.

No lines should be within 50ft distance from a National Highway.

2.2.3 Approval of Line Routes

Prior to the erection of lines along public roads, the authority responsible for the road should be contacted and approval obtained for the location of all poles, road crossings, tree cutting or trimming and guying locations. Where overhead distribution lines are to be constructed in urban areas, it will also be necessary to contact the local Town Planning Authority for approval. Where appropriate, approval should also be obtained from authorities such as the National Environment Commission, Department of Forestry, etc.

Once the line route is finalised, a detailed line survey should be undertaken and the pole locations finalized and marked. Poles should be located well clear of water and other areas of potential land subsidence. Poles for lines that cross-agricultural fields should, wherever possible, be located at bunds.

2.2.5 Tree clearances

The width for tree clearance will depend upon the voltage and the importance of the line concerned. No rigid limitations can be laid down. However, the following clearances may be adhered to, as far as possible.

Voltage	Comment
33 kV lines	The route should be cleared of all growth within 6 m on either side starting from the center of the line and, in addition, of trees that could fall and contact the line.
11 kV Lines	The route should be cleared of all growth within 4.5 m on either side starting from the center of the line and, in

	addition, of trees that could fall and contact the line.
Low voltage	Left to the discretion of the Supervisor. Aerial bundled low voltage conductor is insulated so contact with vegetation should not cause a fault. However, the route should be cleared so the risk of trees falling across the line is minimized.

2.2.6 Overhead Line Clearances

The following minimum clearances should be maintained.

Particulars	**33 kV**	**11 kV**	**LV (bare conductor)**	**LV (ABC)**
Ground clearance				
• **Across street**	6.1 m	6.1 m	5.8 m	5.5 m
• **Elsewhere**	5.8 m	5.8 m	5.5 m	4.5 m
Separation between phases				
• **Horizontal**	0.9 m	0.7 m	#	#
• **Vertical**	1.0 m	0.6 m	0.3 m	#
Clearance from buildings				
• **Horizontal**	1.8 m	1.2 m	1.2 m	#
• **Vertical**	3.7 m	3.7 m	2.5 m	#
Sectional clearance	2.8 m	2.6 m	#	#
Safe working clearance (minimum)	0.6 m	0.3 m	0.15 m	#

Notes: #: Not Applicable

The following minimum vertical separation of conductors should be maintained.

Particulars	**Minimum Clearance**
33 kV and 11 kV	1.2 m
33 kV and LV	1.5 m
11 kV and LV	1.2 m
33 kV or 11 kV and telephone line	1.8 m
LV and telephone line	0.6 m

2.2.7 Road Crossings

The road crossings should be as minimum as possible.

2.3 Construction, Testing and Commissioning

The construction of overhead lines may be divided into the following parts:

(i) Erection of supports.
(ii) Providing guys to supports.
(iii) Mounting cross-arms, pins and strain insulators.
(iv) Stringing of line conductors.
(v) Jointing of conductors.
(vi) Sagging or tensioning of conductors.
(vii) Earthing.
(viii) Testing and commissioning.

The drawings/sketches may be referred, which give the details regarding phase to phase clearances, positioning of cross arms, pole top brackets, earth wire clamps, etc.

2.3.1 Alignment of the line

A detailed route survey for the line has to be made and approval of the alignment of the line should be obtained by the Engineer before excavation of the pits. To the extent possible, alignment of lines shall be located along or close to existing roads and tracks. During alignment, the pole locations may be marked with pegs conspicuously and shall be located with adequate distance from water bodies. Also, the poles that pass through agricultural field, to the extent possible shall be located at the bunds.

2.3.2 Erection of supports

After the final survey of the line and after marking of the pole locations with peg and approved by the Employer, excavation work has to be commenced. The pits for the supports are excavated in the direction of the line as this will facilitate the erection of support, in addition to giving greater lateral stability. The depth of the foundation to be excavated for poles shall be 1400 mm for 7.5 metre poles (LV), 1600 mm 9.0 metre (11 kV) poles and 1900mm for 10 metre (33kV) poles, while the area of the foundation will be 600x700mm.

Before the pole is put into the pit, a stone base of 100 mm thick shall be placed at the bottom of the pit. In lieu of 100 mm PCC base, base plate is being used. When the pole is erected inside the pit, wooden dead men may be utilized to facilitate lifting of the pole. Once planted into the pit, the pole should be kept in a vertical position with the help of ropes, using them as a temporary anchor.

As the poles are being erected, say from an anchor point to the next angle point, the alignment of the poles is to be checked and set right by visual check. The verticality of the poles are to be checked with a spirit level on both transverse and longitudinal directions. In case of LV lines, the holes for fixing hook brackets, bolts are also to be checked for facing proper direction.

Once the verticality and alignment are satisfactory, the pit shall be backfilled and compacted to a distance of 450 mm below ground level. A 500 x 500 mm concrete foundation shall then be constructed around the pole and extending to 300 mm above the ground level as shown in the relevant drawings. The concrete shall be a mixture of cement, granite chips of 20/30 mm mesh and sand in the ratio of 1:2:4. The top of the foundation shall be tapered to allow water to run away from the pole.

Concrete foundations are not required for poles that are hot dip galvanised. In this case the foundation should be backfilled with excavated soil. The backfill should be progressively compacted as the foundation is filled. Do not simply refill the foundation and compact at the surface.

After the poles have been set and the excavated pit backfilled and compacted, the temporary anchors may be removed

2.3.3 Erection of DP Structures for angle locations

Generally, for angles of deviation more than 10 degrees, double pole structure shall be erected. The pits are to be excavated along the bisection of the angle of deviation.

Before the pole is put into the pit, a stone base of 100 mm thick shall be placed at the bottom of the pit. In lieu of 100 mm PCC base, base plate is being used. After erection of the poles the pits will need to be temporarily backfilled so the poles can be climbed and the horizontal bracing fitted. The structure should then be set for verticality and alignment and the supports held in position with the help of temporary rope guys.

The temporary backfilling should be removed and permanent foundations constructed by backfilling, compacting and, if necessary, concreting each pit as described in Section 2.3.2. Concrete foundations are not required if the poles are hot dipped galvanised.

Stays along the bisection of the angle of deviation as required depending on the conductor size and angle of deviation, are to be provided.

2.3.4 Special Foundation in Unstable Soil

Special care has to be taken where foundation in unstable soil is encountered.

In such locations, mass concrete foundations, extending up to the ground level, are to be adopted to avoid collapse of foundation in the unstable soil. The concrete is to be a mixture of cement, granite chips of 20/30 mesh and sand in the ratio of 1:2:4.

2.3.5 Anchoring and providing guys for supports

One or more guys will have to be provided for all supports where there is an unbalanced strain action on the support, which may result in tilting/uprooting or breaking of the support. To avoid such situation arising, guys are provided to take care of the unbalanced

forces. Normally, these guys are provided to the supports at the following places: (i) Angle locations (ii) Dead end locations (iii) Tee-Off pointsand (iv) Steep gradient locations to avoid uplift on the poles.

Guy wires shall be angled at 45° from the vertical for 33 kV and 11 kV lines and 30° from the vertical for low voltage lines.

Single guys shall be provided for single poles with line deviations from 5° to10° and also for double poles with line deviations not exceeding 30°. Where the angle of deviation exceeds 30°, two guys along the resultant angle of line deviation or one guy in each direction of the line shall be provided. When two or more stays are fixed to the same support, each stay should be attached separately to the pole.

The installation of guy will involve the following works:

(i) Excavation of pit and fixing guy rod;
(ii) Backfilling and compacting the guy foundation;
(iii) Fastening guy wire to the support; and
(iv) Tightening guy wire and fastening to the anchor.

After completion of installation work the foundation shall be allowed to consolidate for at least 7 (seven) days before installation of the guy wire.

When installing the guy wire, the turnbuckle shall be mounted at the pole end of the stay and guy wire so fixed that the turn buckle is half way in the working position; thus giving the maximum movement for tightening or loosening. Where the existence of guy wire may be hazardous, it should be protected with a suitable PVC pipe, filled with concrete of about 2-metre length above the ground level, duly painted with white and black stripes. No guy insulator shall be located less than 3 metres from the ground.

2.3.6 Fixing of cross arms and insulators

After the erection of supports and providing guys, the next step would be to mount the cross arms on the support. The practice of fixing the cross arm before the pole is erected is followed sometimes but only after the pole painting. In case, the cross arm is mounted after the support is erected, the line-man should climb the support having requisite tools with him. The cross arm is then tied to a hand line and pulled up by the ground man, through a pulley till the cross arm reaches the line-man. The ground man should station himself well to one side so that if any material drops from the top of the pole it may not strike him. All the materials required should be lifted or lowered by means of the hand line. In no case, the materials or the tools should be dropped or thrown from the pole top. Horizontal cross arms and pole top brackets (hamper assemblies) for 33 kV and 11 kV lines as per construction drawings/sketches are standardized. They shall be fitted as shown on the drawings.

The pins for insulators are fixed in the holes provided in the cross arms and the pole top brackets. The insulators are mounted in their places over the pins and tightened. In the case of strain or angle supports, where strain fittings are provided for this purpose, the straps of the strain fittings are placed over the cross arm before placing the bolt in the hole of the cross arm. The nut of the straps is so tightened that the strap can move freely in horizontal direction, as this is necessary to fix the strain insulator.

2.3.7 Laying of AAAC/HV ABC/LV ABC/ACSR Conductor

During running out, the conductor drum should be securely supported on drum jacks with an axle, so that the conductor is pulled from the top of the drum. The drum jacks should be on a firm foundation and the axle of the drum jack should be leveled horizontally.

Sufficient employees shall be engaged at site to ensure that the conductors are not damaged by contact with the ground or pole hardware during running out. Stringing pulleys shall be used while stringing conductors. Care should be taken to avoid kinking, twisting or abrading the conductor in any manner. The conductor should not be trampled on, run over by vehicles or dragged over the ground. Vehicles should not be used to run out conductors.

Extreme care must be taken to avoid contact with the conductors of any other live line in the vicinity when running out or stringing conductors, and if necessary neighbouring lines should be de-energised during the stringing operation.

Stays shall be installed and kept in position before conductors are strung to avoid over straining of poles. Stringing pulleys shall be used while stringing conductors.

In installing LV aerial bundled cable, the cable must be pulled from the top of the drum and should not be dragged along the ground. A suitable 'drum brake' mechanism shall be used to prevent conductor overrun. Stringing pulleys compatible with bundled conductor shall be installed on every pole. During running out, the cable should be pulled out by hand or by using a nylon-pulling grip designed for bundled cables. Insulated conductor grips designed to prevent damage to the insulation of the conductor shall be used for tensioning. Every care must be taken to avoid damage to the conductor insulation.

2.3.8 Mid span jointing of conductors

Mid-span jointing of conductors shall use compression joints, appropriately sized for the conductor and made with a proprietary compression tool using appropriate sized dies.

2.3.9 Sagging and Tensioning of conductors

After completion of conductor stringing and making any mid-span joints, conductor tensioning operations can commence. The conductors are first attached to the insulator string assembly at the non-tensioning end of the section, using preformed dead-ends.

Further, before tensioning commences, temporary guys should be provided as necessary for the anchoring supports at each end of the line section to be tensioned to avoid over-stressing the strain poles due to unbalanced loads.

The centre conductor should be tensioned first followed by the outer two conductors. At the tensioning end, the conductor being tensioned is pulled manually up to a certain point and then a come-along clamp is fixed to it. The grip to the come-along clamp is attached to a double sheave pulley block or a pull-tight machine and the conductor is gradually tensioned.

The conductor should then be sagged in accordance with the sag-temperature chart for the particular conductor and span. These are given in Section 2.3.10 below. The correct sag should be measured in the middle span of the section.

The stretch of the conductor has to be taken out before sagging in order to avoid the gradual increase in sag, due to the setting down of the individual wires. There are two ways of accomplishing this:

(i) Pre-stressing

Using the prestressing method, the conductor is pulled unto a tension considerably above the correct figure, but never exceeding 50% of breaking load for a period of about twenty minutes. As this method requires more time and involves the use of stronger tackle to secure the higher tension, it is not commonly used.

(ii) Overtensioning

The overtensioning method consists of pulling up the conductor to a tension of 5%-8% above the theoretical tension for the prevailing temperature and fixing the conductor at that tension with correspondingly reduced sag. Over time, the conductor will settle down to the correct sag and tension.

Conductors can be sagged correctly only when the tension is the same in each span throughout the entire length of the section. Use of snatch blocks during sagging reduces the friction and chances of inequality of tension in various spans.

Measurement of conductor sag can be accomplished by several different methods but most commonly used method is 'sighting'. Targets are placed on the supports below the cross arms. The targets may be light strips of wood, which are clamped to the pole at each end of the sagging span at a distance below the conductor when the conductor is placed in snatch blocks that is equal to the required sag. A lineman sights the sag from the next pole and the tension of the conductor is reduced or increased, until the lowest part of the conductor in the span coincides with the lineman's line of sight.

When sagging is completed, the preformed dead end should be fixed to the tension end. The dead-end and socket thimble can be fitted to the conductor without releasing the

tension. A mark is made on the conductor at a distance from the cross arms equal to the length of the complete strain insulator to indicate where the dead-end should be installed.

After the dead-end has been installed and the insulator string attached to the top hamper or cross-arm, the conductor is pulled in sufficiently using the come-along clamp, to allow the insulator assembly to be fitted to the socket thimble. After the conductor is attached, the conductor tension may be released gradually. If the tension is released with a jerk, an abnormal stress may be transferred to conductor and support, which may result in the failure of the cross arms, stay or pole.

After the stringing is completed, all poles, cross-arms, insulators, fittings, etc. should be checked to ensure that there have been no deformities, etc.

The conductor is then placed on the pin insulator on each pole ready for tying and to remove the snatch blocks. On straight line poles the conductor should be tied to the top groove of the insulator and on angle poles the conductor should be tied to the side groove. The conductor is then fastened to the insulator using aluminium helities or binding wire.

In fastening the conductor to pin insulators, the following points should be observed:

(i) The correct size of binding wire, which can be readily handled, and with adequate strength should be used.

(ii) The length of tie wire should be sufficiently long for making the complete tie including end allowance for gripping each end.

(iii) A good tie should provide a secure binding between the line conductor and insulator, and should reinforce the conductor on either side of the insulator.

(iv) The use of cutting pliers for binding the tie wire should be avoided.

(v) A helities or binding wire that has been used previously should not be reused.

(vi) Before tying the conductor to the insulator, it shall be ensured that only the portion of helities wrapped with chloroprene pad (where applicable) touches the insulator.

(vii) At section poles correctly sized parallel groove (PG) clamps must be used to connect the two conductor tails.

2.3.10 Conductors Sag and Tension

The following sag-span tables are provided for the guidance of field staff when stringing conductors.

2.3.10.1 ACSR Conductors

Sag-Span Chart - 33kV, Wolf

Conductor : Wolf
Voltage : 33 kV
Design Tension : 3.42 kN at 15°C, no wind (approx 5% MBL)

Temp	10°C	15°C	25°C	30°C	75°C
Span (m)	Sag (m)				
40	0.37	0.42	0.51	0.55	0.70
50	0.60	0.65	0.75	0.80	0.97
60	0.88	0.94	1.04	1.09	1.28
80	1.61	1.67	1.78	1.84	2.04
100	2.55	2.62	2.73	2.79	3.27
150	5.82	6.00	6.00	6.07	6.60

Sag-Span Chart – 33 kV, DOG

Conductor : Bare ACSR DOG
Voltage : 33 kV
Design Tension : 1.95 kN kg at 15°C, no wind (approx 5% of MBL)

Temp	10°C	15°C	25°C	30°C	50°C
Span (m)					
40	0.34	0.40	0.50	0.55	0.88
50	0.56	0.62	0.73	0.79	1.17
60	0.83	0.89	1.01	1.07	1.49
80	1.52	1.59	1.72	1.78	2.26
100	2.38	2.45	2.59	2.65	3.19
150	5.44	5.52	5.66	5.73	6.33

Sag-Span Chart – 33 kV, RABBIT

Conductor : Bare ACSR RABBIT
Voltage : 33 kV
Design Tension : 1.04 kN kg at 15°C, no wind (approx 5% of MBL)

Temp	10°C	15°C	25°C	30°C	50°C
Span (m)					
25	0.125	0.157	0.231	0.266	0.389
30	0.187	0.227	0.310	0.350	0.488

35	0.262	0.308	0.400	0.443	0.595
40	0.352	0.403	0.501	0.547	0.712
60	0.845	0.907	1.023	1.078	1.280

Sag-Span Chart – 11 kV, DOG

Conductor : DOG
Voltage : Bare ACSR 11 kV
Design Tension : 5.71 kN kg at 15°C, no wind (approx 17% of MBL)

Temp	**10°C**	**15°C**	**25°C**	**30°C**	**50°C**
Span (m)					
40	0.12	0.14	0.18	0.22	0.65
50	0.19	0.21	0.28	0.33	0.84
65	0.27	0.31	0.40	0.45	1.03
80	0.49	0.54	0.68	0.75	1.46
100	0.76	0.84	1.01	1.11	1.93
150	1.76	1.88	2.14	2.26	3.33
200	3.20	3.35	3.65	3.80	5.05
250	5.06	5.23	5.57	5.74	7.13
300	7.35	7.54	7.90	8.07	9.57

Sag-Span Chart – 11 kV, RABBIT

Conductor : Bare ACSR RABBIT
Voltage : 11 kV
Design Tension : 3.02 kN kg at 15°C, no wind (approx 17% of MBL)

Temp	**10°C**	**15°C**	**25°C**	**30°C**	**50°C**
Span (m)					
25	0.047	0.054	0.076	0.093	0.220
30	0.068	0.078	0.108	0.131	0.280
35	0.093	0.106	0.146	0.174	0.344
40	0.122	0.139	0.188	0.222	0.412
60	0.278	0.313	0.404	0.460	0.720

2.3.10.2 Covered AAAC/HV ABC Conductors

Conductors shall be tensioned by evenly tensioning each conductor. The sag and tension tables and recommendations of conductor manufacturer should be utilized.

2.3.10.3 Low Voltage Aerial Bundled Conductors (ABC)

Sag-Span Chart for Low Voltage ABC Conductors

Conductor Size	50mm^2		95mm^2	
Design Tension at 15^{0}C (kN)	2.52	5.04	4.79	9.58
Span (m)	Sag (m)			
30	0.15			
40	0.26			
50	0.41			
60	0.59			
70	0.80			
80	1.04			
90	1.32			
100	1.63			
110	1.97			
120	2.35			
130	2.75			

Maximum Spans for Aerial Bundled Cable

Pole Length (m)	Maximum Span (m)	
	Across Street	Elsewhere
7.5	50	80 (4 core)
		100 (2 core)

Dead-end (termination) fittings shall be fitted to the conductor after tensioning at each termination point. Intermediate fittings shall then be fitted at major angles and then at smaller angles. After all fittings are in place the sagging should be checked at two places and corrected if necessary.

2.3.11 Supports at Different Elevation

Where the supports at each end of a span are at different elevations the following formula can be used for sagging the conductor.

$$d_1 = d(1-h/4d)^2$$

where:

d_1 = vertical distance between the conductor at the lower support and the lowest mid-span point.

d = sag for a level span equal to the slope distance between the poles. The slope distance is the distance that would be measured by a tape stretched

between the two poles. Once this is known the value of d can be taken from Sag-Span chart above.

h = difference in height between the conductor at each end of the span.

The above formula can be used to determine the value of d_1. A sighting board can then be attached to the lower support pole and the conductor sagged be sighting horizontally through it. One way to do this would be to attach a second sighting board to the next pole. Check that the two sighting boards are level using a taut line and spirit level. The sag can then be sighted using the two sighting boards.

2.3.12 Good Conductor Stringing Work Practices

DO:

Use proper equipment for handling aluminium conductors at all times.
Use skids, or similar method for lowering reels or coils from transport to ground.
Examine the reel before unreeling for presence of nails or any other object, which might damage the conductor.
Rotate the reel or coil while unwinding the conductor.
Unwind the conductor in the direction of the arrow on the side of the drum
Grip all strands when pulling out the conductor.
Control the unreeling speed with a suitable braking arrangement.
Use wooden guards of suitable type to protect the conductor when pulling it over barbed wire fences, sharp rock edges or similar obstructions.
Use long straight, parallel jaw grips with suitable liners when pulling the conductor in order to avoid nicking or kicking of the conductors.
Use free-running sheaves or blocks with adequate grooves for drawing/paying conductors.
Measure temperatures accurately with an accurate thermometer.
Use proper sag charts.
Mark conductors with crayons or adhesive tape or such other material which will not damage the strand.
Make all splicing with the proper tools.

DO NOT

Do not handle conductors without proper tools at any stage.
Do not pull conductors without first ensuring that there are no obstructions on the ground.
Do not pull out a greater quantity of conductor than is required.
Do not make jumper connections on dirty or weathered conductor. Instead, clean the conductor with sandpaper. Alternatively apply a chromite or graphite conducting oxide-inhibiting grease to the point of connection and then clean the conductor with a wire brush.
Do not handle aluminium conductor in a rough fashion but handle it with care it deserves.

At road crossings, a flagman should be in attendance to that traffic is not unduly interrupted. The running of conductor across roads should only be carried out in with the approval of the Authority responsible for the road.

Conductor drums should be transported to the tension point without injuring the conductor. If, it is necessary to roll the drum on the ground for a small distance, it should be slowly rolled in the direction of the arrow marked on the drum.

When running out conductor the drum should be so supported that it can be rotated freely. For this purpose, the drum should either be mounted on the cable drum supports or jacks or hung by means of chain pulley of suitable capacity, suspended from a tripod. If it is not possible to raise the conductor drum by any of the above methods, a trench of suitable depth slightly bigger than the conductor drum may be dug, so as to facilitate free rotation of the drum when it is suspended above the trench using a steel shaft. While running out the conductor, care should be taken to ensure that the conductor does not rub against any metallic fitting of the pole or on the uneven or rocky ground. Wooden trusses may be used for this purpose to support the conductor when running out.

Should the length the conductor be less than the length of the section, the conductors should be run out from both ends and joined where they meet with a mid-span full tension joint.

On no account, should any part of the conductor shall be left overnight at a height of less than 5 metres above the ground. The work should be so arranged that before the end of the day, the conductor is raised to a minimum height of 5 metres above the ground by rough sagging.

2.3.13 Earthing of Distribution Lines

All 33 kV and 11 kV steel poles should be separately earthed. The earth pin is a 2.5 m galvanised steel rod, which must be driven into undisturbed ground clear of the pit excavation. It is not acceptable to insert the earth rod in the pit excavation as the backfill used often does not provide a good earth connection.

The earth pin is connected to the pole using No 8 SWG galvanised steel wire/GI Strip as shown in the drawings. Lugs and bolts must be used for both the connection to the pole and to the earth pin. Wire wrapped connections are not acceptable as a good electrical connection cannot be assured.

The earth resistance of the pole and earth pin connected together should be as low as possible and ideally should not exceed 10 ohms. Additional earth pins, spaced at least 1 metre apart, should be used in difficult locations, to reduce the resistance.

The earthing stake for pole earths is also used for earthing LV distribution pillars.

The earth resistance of the earth stake and pole connected together should be measured and recorded every tenth pole. The earth resistance of a greater percentage of poles should be measured if earth resistances are high or if there is high soil variability.

2.3.14 Final Completion and Commissioning

Before commissioning a line into service, the line shall be visually checked over its full length to ensure that all structures are correctly installed, all pole earths are installed and connected, all conductors are correctly bound and terminated on all structures and all tools and other equipment have been removed.

The line shall be energised with all distribution substations isolated and unloaded on the low voltage side. Where the line is directly connected to a zone substation supply bus, rather than to an upstream line, the protective relay settings should be reduced. Once the line has been successfully energised, the correct protection relay settings should be applied and the distribution substations connected to the load one at a time.

In energising distribution transformers for the first time, the MV drop out fuse should first be closed to liven the transformer on no load. The transformer can then be loaded by closing the incoming MCCB in the LV feeder cubicle.

3. Underground Cable Installation

3.1 General Scope

This specification covers the requirements of Cabling System installation work. The installation, testing and commissioning of the complete cabling system shall be carried out as stipulated in this specification. This shall cover the requirements of supply of cabling accessories such as lugs, glands, jointing and terminating boxes/kits, junction/ marshalling boxes, cable trays, conduits and pipes to complete the wok in all respects. These notes in general cover cables upto and including 33 kV rating.

3.2 Codes and Standards

3.2.1 The cabling system installation work shall comply the latest applicable standards, regulations and safety codes of the locality where the installation is carried out. Nothing in this specification shall be construed to relieve the Contractor of this responsibility.

3.2.2 The installation work shall conform to the latest applicable codes of practices, Electricity rules, Fire Insurance Regulations and standards.

3.3 Installation Work Scope

3.3.1 Scope

a) The installation work shall include unloading, storing, laying, fixing, jointing/ termination, testing, commissioning and any other work items necessary completing the job.

b) The Contractor shall furnish all supervision, labour, tools, welding equipment, tackles and testing equipment as required for installation work. All incidental hardware and miscellaneous items such as saddles, spacers, nuts/bolts/washers, anchor fasteners, cable route and joint markers and protective covers for buried cables, cable identification tags and ferrules, nylon cord/G.I. wire, earthing as required for the cabling installation shall be deemed to be included by the Contractor as part of installation work.

c) Civil works for constructions of built-up cable trenches/tunnels/duct banks, cable carrier supports on main pipe rack structure, provision of embedded conduits/pipes in RCC masonry structures and across roads are included in Contractor's scope.

d) The Manufacturer's drawings, cable schedules, instructions and recommendations shall be correctly followed by the Contractor in handling, laying, testing and commissioning of the cabling system. In case of any doubt/misunderstanding as to correct interpretation of drawings/instructions, necessary clarifications shall be obtained by the Contractor from the Employer.

e) Any changes in routes of cables which are required to be made to suit site conditions shall be carried out by the Contractor in consultation with the Engineer and after his approval. All such changes shall be marked by the Contractor on relevant drawings/in cable and conduit schedule.

f) All thefts and damage of cables or equipment to which cables are to be connected, till the installations is handed over to the Employer, shall be made good by the Contractor.

g) It will be responsibility of the Contractor to clean the trenches/tunnels, remove cable drums, surplus/waste materials and all other similar items after the installation work is completed.

3.3.2 Cable Laying

a) The Contractor shall install, test and commission all power and control cables. The quantities, sizes and types of cables shall be indicated in Bill of Quantities.

b) The cable shall be laid in built-up trenches, directly buried in ground, cable ducts, on cable trays vertical raceways, clamped on structures/walls/ceiling, pulled through pipes and conduits etc., as per the relevant cable installation practice notes and drawings.

c) The Scope of cable laying shall include laying, pulling cable as above, proper dressing of cables on cable trays, racks, vertical raceways and supply and installations of cable fixing saddles, spacers and nylon cord for tying as required. The installation of trefoil/wooden clamps for clamping the cables shall be included in the installation cost of relevant cables including excavation, backfilling, etc. However, during layout of cable do not drag the cable on surface of ground, roads, etc. including pulling with excessive force especially with help of vehicle.

d) Where cables are to be installed at temperatures below 3 ° C, they shall be heated to about 10 ° C for not less than 24 hours (in a heated building or in a tent with hot air heater) to facilitate laying (otherwise the bending would damage the insulation and protective coverings of cables). The cable laying must be carried out swiftly so as not to allow the cable to cool down too much.

e) Control cables and small power cables in trenches and tunnels shall be run in ladder type cable trays (maximum tray width 600 mm) supported on trench/tunnel carrier arms. Control and power cables shall be clamped separately. It will be the responsibility of the Contractor to check the neatness of such cable runs and to see that horizontal/vertical funs of cables are parallel to fixed axes in respective plans. The cables shall be laid to tray rungs by means of 3mm dia. nylon cord at an interval of 5000 mm and also at bends.

f) For good sealing arrangement at entry points, suitable pipe sleeves, adequate in number and of adequate sizes shall be provided in building walls/slabs for passage of cables into a building from cable trays/racks/cable trenches located outside the buildings.

3.3.3 Cabling

a) Standard cable grips and reels shall be utilised for cable pulling. Care shall be taken to avoid damage to the cable and seal, which shall be made up and maintained during cable installation. If unduly difficult pulling occurs, the Contractor shall check pull required and suspend further pulling until further procedure has been approved by the Engineer. Maximum pull tension shall not exceed recommended value for the cable measured by the tension dynamometer. In general, any lubricant that does not injure the overall covering and does not set up undesirable conditions of electrostatic stress or electrostatic charge may be used in pulling insulated cables in conduits and ducts. In particular soap shall not be used as lubricant. For cables over 2,000 volts and having non-metallic jackets without adequate static shielding, the lubricant should not include graphic or hygroscopic greases that will leave a conducting film on the surface of the cable. It is not considered likely that all cable to be pulled from any pulling location can be pulled consecutively without moving and later backtracking, and it may be required that cables reels and equipment be moved from pulling locations when no actual pulling is in progress to allow performance of collateral work, and when so requested by the Engineer, such reels and equipment shall be removed. When

pulling cable from any pulling location, reels shall be laid out from locations, which will permit performance of collateral work without obstruction.

b) After pulling cable, the Contractor shall record cable identification and date pulled, neatly with water-proof ink on linen tags at all cable ends. This is in addition to the cable identification tags to be tied by GI wire at each end of the cable.

c) Cable take-off from drums shall be so planned as to avoid using joints and splices in the run of the cable. Cable splices will be made only after obtaining permission of the Engineer. Splices where permitted, shall be made in a neat workmanlike and approved manner by man specialised in this class of work, particular attention being paid to higher voltage splices and splices involving armour or lead sheath constructions. Splices shall be made by the Contractor for each type of wire or cable in accordance with the instructions issued by the cable Manufacturer and the Engineer. Before splicing, insulated cables shall have conductor insulated stepped and bound or pencilled for recommended distance back from splices to provide along leakage path. After splicing, insulation equal to that of the spliced conductors shall be applied a teach splice. In baring conductors for splices, care shall be taken to avoid nicking of strands.

d) Cables shall be protected at all times from mechanical injury and from absorption of moisture at unprotected ends. Damaged cables shall be replaced at the Contractor's expense.

e) Sharp bending and kicking of cables shall be avoided. The bending radii for various types of cables shall not be less than those specified below, unless specified in cable installation notes.

DESCRIPTION	SINGLE CORE	MULTICORED ARMOURED	MULTICORED UNARMOURED
PVC insulated cable upto 11 kV	20 D	12 D	15 D

Where D = Overall diameter of cable.
(For XLPE insulated cables, recommendations of manufacturers to be followed).

If shorter radius appears necessary, no bend shall be made until clearance and instructions are obtained from the Engineer.

The above values may be reduced to 70% when making only one bend such as in case of installing an end termination.

f) When power cables are laid in the proximity of communication cables, minimum separation between power and communication cables shall be not less than 460 mm for single-core cables and 300 mm for multi-core cables. Power and communication cable shall, as far as possible, cross at right angles to each other.

g) The end portions of directly buried cables shall be protected as indicated in the relevant enclosed typical drawing by bringing out the cables from earth at the entry/exit points in conduits/pipes.

h) Unarmoured cables shall be protected in conduits up to 2.5 meters from floor level.

i) The Contractor shall make connections to small electrically operated devices on equipment installed as accessories to, or assemble with other equipment and requiring two-wire or three-wire connections. Connections to recording instruments float switches, limit switches pressure switches, thermocouples, thermostats and other miscellaneous equipment shall be done as per the Manufacturer's drawings and schedules.

j) The Contractor shall be responsible for correct phasing of the motor power connections and shall interchange connections at the motor terminal box, if necessary, after each motor is test run.

3.3.4 Cable Termination

a) All cables that will be laid by the Contractor shall be connected at both ends to switchgear, panels, equipment, local push buttons, instruments or junction/marshalling boxes terminals as the case may be.

b) The scope of termination at each and shall include dressing and connection of all the cores of the cables. The following shall be included in this scope of work:

(i) Making the requisite holes in the bottom/gland plate of the switchgear for cable boxes/glands, fixing the cable boxes/glands, terminating the cables in the cable boxes/glands, earthing the cable armour, crimping the cable lugs on each core neatly, clamping the cables inside switchgear/panels cable alleys, wiring troughs and connecting to correct terminals as per the Manufacturer's wiring diagrams and cable schedules. The cable and core identifying lugs and ferrules respectively shall be supplied and installed by the Contractor as part of cable termination work.

c) All cable terminations shall be solderless crimping type. Proper crimping tools shall be used by the Contractor. The crimping tools used shall be subject to the Engineer's approval.

d) Spare cores of control cables shall be connected to spare terminal blocks, where available, with appropriate ferrules. If there are no spare terminal blocks, the spare core shall be bunched together and shall be neatly kept inside the panel.

e) At cable terminal points where the conductor and cable installation will be terminated, terminations shall be made in a neat, workmanlike and approved manner by men specialised in this class of work. Terminations shall be made by the Contractor for each type of wire or cable in accordance with instructions issued by cables Manufacturer and the Engineer. The Contractor shall have on hand at the job site the Manufacturer's drawings on high voltage cable terminations. Terminations shall be made using compression type lugs. Main runs of power and control cables will consist of PVC/XLPE insulated armoured or unarmoured cables. Terminations of such cables will generally occur in terminal boxes where splices may be required, using a special compressing or clamp type termination, beyond which PVC insulated conductor, will continue to the terminals of the control device. Terminal boxes in which splices occur will require filling with compound after completion of splices.

f) Where terminal boxes have wiping sleeves, the lead sheath of cable shall be belled in an approved manner to fit, and a standard wiped joint made, using stearing flux and lead heated to proper temperature. Where conduits continues with cable to terminal box and mechanical clamping of lead sheath of cable is required, sheath shall be belle, trimmed and clamped in a good and approved manner. Before any cable terminal connections are made, conductors shall be rung out and identifying tags shall be installed as required by the Engineer. Connections shall be made according to wiring diagrams. Polarity of phasing shall be checked before connections are made, and correction of polarity, phasing or rotation shall be made by the Contractor without additional cost.

g) Control cable terminations shall be made in accordance with wiring diagrams/cable interconnection diagram and cable schedules. It is the intend that the Contractor shall terminate the cables which he installs. Additional work of testing and reconnection where leads have been brought by the Contractor to terminal boards and connected, but where on further testing, reversal or other rearrangement of load turns out to be necessary, additional work of testing and reconnecting shall be performed by the Contractor at no extra cost to the Employer.

h) When control cable cores are to be fanned out and cabled together with core, the Contractor shall make connections to terminal blocks, and test equipment for proper operation before cables are corded together. If there is any doubt as to proper connection, the Contractor shall make temporary connection with sufficient length of cable so that cable can be switched to another terminal without splicing cable. Splices will not be accepted, and any cable cut out short shall be replaced and installed, at the Contractor's expense. After correct connections are established through operating equipment, cables shall be cut to correct lengths connected to terminals in the specified manner and corded together where necessary to hold cables in place in a workman-like manner.

3.3.5 Associated Work for Direct Burial of Cables, Conduits and Pipes

a) The Contractor's scope of work for the cable trenches required for directly buried cables shall include excavation, preparation of riddled soil bedding, supply and installation of protective covers i.e. tiles for HT cable and bricks for LT cables, back-filling, ramming and installation of route markers and joint markers. The details of construction work and provision of protective covers and markers shall be as indicated in the enclosed drawings of installation practice for directly buried cables. The sizes of these trenches shall be as indicated in the Drawing.

b) The Contractor's scope of construction work for directly buried pipes/conduits shall be excavation and back filling as per varying depths/widths required in drawings.

c) In each cable run greater than 50 metre, some extra cable length shall be kept at a suitable point to enable a straight through joint to be made should the cable develop fault at a later date.

d) Where cables cross roads, water or sewage pipes, the cable shall be laid in hume or steel pipes. For road crossings the pipe for the cable shall be buried at not less than 600 mm unless otherwise noted in the drawings. Hume pipes shall be preferred to that of steel pipes from the point of view of corrosion.

3.3.6 Cable Joints

a) Cables to each circuit shall be laid in one continuous length. Cable jointing and splicing shall be done after obtaining Site Engineer's permission. The work shall be carried out as per the cable and jointing kit Manufacturer's instructions furnished to the Contractor.

b) The scope of jointing of various sizes and types of power cables indicated in Bill of Quantities shall include all necessary special tools and incidental accessories for testing of the joints and as per specification.

c) Directly buried cables shall be laid as per the drawings and cable route markers shall be provided. At least one marker shall be provided if the length of the buried cable is less than 15 metres. Buried cables in trefoil formation shall be bound by plastic tapes or 3mm dia. nylon core every 750 mm.

d) Jointing of cables shall be carried out in accordance with relevant Standard Codes of Practice and the Manufacturer's special instructions. Hardware like clips and clamps and tools required for cable jointing work shall be supplied by the Contractor. Cables shall be firmly clamped on either sides of a straight through joint at not more than 300 mm away from the joints. Identification tags shall be provided at each joint and at all cable terminations. Single core cable joint shall be marked so that phase identity at each can be determined easily. The joints shall be located at the most suitable places. There shall be sufficient overlap of cables to allow for the removal of cable ends which may have been damaged.

e) Joint pits shall be of sufficient dimensions to allow the jointers to work with as much freedom as possible. When two or more cables are laid together, joints shall be arranged to be staggered by about three metres.

f) Cable seal shall be examined to ascertain if they are intact and also that cable ends are not damaged. If the seals are found to be broken or lead sheath punctured, the cable ends shall not be jointed until after due examination and testing by the Engineer. Before joining is commenced, insulation resistance of both sections of cables to be jointed shall be checked by megger and insulation values recorded.

3.3.7 Junction/ Marshalling Boxes/ Button Station Installation

a) The Contractor shall install the junction/marshalling boxes wherever necessary.

b) The scope of installation of junction/marshalling boxes and push-button stations shall be mounted on wall, columns, and structures, including necessary bolts, nuts, screws and welding work as necessary.

c) Cable entry to motors, push button stations and other electrical devices shall be from the bottom as far as possible or from the sides. Top entry shall be avoided particularly for outdoor equipment.

d) Identification tags made from aluminium sheet shall be attached to each end of each cable by means of GI binding wire as shown in drawing. Tags shall be additionally put at an interval of 30 meters on long runs of cables and in pull boxes.

e) Wooden cleats when required for vertically supporting on or more single core cables per phase, such as on vertical framework near transformer cable boxes, shall be made out of well-seasoned wood given two coats of fire retarding paint of approved quality.

3.4 Earthing of Cables

a) Metallic sheaths, screens and armour of all multicore cables shall be earthed at both equipment and switchgear end.

b) Sheath and armour of single core power cables shall be earthed at switchgear end only. If specifically indicated in drawings, for long lengths of cables multiple earthing may have to be adopted to safeguard against the presence of standing voltage under normal as well as fault conditions.

c) Earthing of CT and PT neutral lead shall be at one end only.

d) Metal sheath and armour of the cable shall be bonded to the earthing system of the station. Bond shall be of at least 70 sq.mm copper conductor unless otherwise specified.

3.5 Testing of Cables

a) All new cables shall be megger tested before jointing. After jointing is completed all L.V. cables shall be megger-tested and H.V. cables (3.3 kV and above) pressure tested before commissioning. The test voltage for pressure testing shall be as per the relevant cable standards. 1100/650 Volt grade cables shall be tested by 1000 volt Megger.

b) The Contractor shall furnish all testing kit and instruments required for field testing.

c) All cables of 1.1 kV grade 400 sq.mm and above and all HV cables shall be subjected to DC or AC high voltage test after jointing and terminating but before commissioning as per the relevant standards. Testing with DC voltages should be preferred as test equipment required is compact, easily portable and requires low power. The cable cores must be discharged on completion of DC high voltage test and cable shall be kept earthed until it is put into service.

d) DC test voltage for old cables is 1.5 times rated voltage or less depending upon the age of cables, repair work or nature of jointing work carried out.

e) In each test, the metallic sheath/screen/armour should be connected to earth.

f) Continuity of all the cores, correctness of all connections as per wiring diagrams, correctness of polarity and phasing of power cables and proper earth connection of cable gland, cable boxes, armour and metallic sheath shall be checked.

4. Installation of Distribution Transformer Substations

4.1 Selection of Site

The location of distribution transformer substations should ideally be:

- as close as possible to the centre of the load, in order to reduce the voltage drop in the low voltage circuits;
- in a location that is clear of obstructions and that provides satisfactory access for the incoming medium voltage overhead distribution line;
- readily accessible for transportation of the distribution transformer to site;
- above a road rather than below it where this is practical; and
- in a location likely to provide a low resistance to earth.
- of PAD
-

(and

4.2 Transportation and Handling of Transformers

Distribution transformers should be stored in such a way that 'first in first out' becomes a normal procedure. Care must be taken to place the transformers in store in such a fashion that no damage occurs to tank, bushings, etc. due to movement of personnel and materials.

Transformers should be loaded and unloaded with care. Prior to loading a transformer for dispatch to site, the transformer condition (bushings, fittings, tank, oil level, etc.) should be checked. If any damage is noticed, the in-charge should be notified immediately, and transformer should be loaded only after the written approval of the person in charge. The BDV value of the transformer oil should be checked and transformer should be loaded only after written approval of the In-Charge.

Every transformer dispatched to site should be entered individually in store register. This register should have the following:

(i) Serial Number
(ii) Date of receipt
(iii) Transformer capacity (kVA)
(iv) Manufacturer's name
(v) Date of Despatch to site
(vi) Name of site
(vii) Technical test reports

Transformers should be lifted using the lifting lugs provided on the transformer tank and the lifting arrangement should not cause unbalance of the transformer. Before lifting the complete transformer, it should be ensured that all cover bolts are tightened. The slings, lifting tackle, etc. to be used in hoisting of transformers should have adequate strength to handle the weight.

During transport of transformers, they should be rigidly secured to the transport vehicle and packing materials put on either side of the base of the transformer to prevent skidding. A responsible official shall supervise the loading. Rollers, if provided, should be removed.

Care should be taken in transporting transformers to site to prevent the transformers moving when going up and down hills and around corners.

Transformer should be brought just adjacent to the mounting structure for installation. Lifting tackle should be used for hoisting transformer on structure.

In case, it is not possible to bring the vehicle carrying transformer near the mounting structure, it should be unloaded at a nearest safe place and carried to the mounting structure manually with great care and under proper supervision or shifted on platforms fitted with rollers.

While installing transformers, safety precautions by way of fixing additional clamps and bolts should be taken.

Readymade slings to suit the capacity of transformer should be available.

4.3 Substation Structure and Earthing

The distribution substation structure and earthing of the equipment and structure shall conform to the relevant construction drawings. The maximum permissible earth resistance is 5 ohms.

4.4 Protection of distribution transformers

Dropout fuses are provided on H.V side of the transformer for isolating and protection.

MCBs and fuses are provided on the LT side of the transformer for isolating and for protection against feeder faults.

4.5 Installation of Distribution/Mini Pillarsconsumer'sbreakers (

Distribution/Mini Pillars are used to connect customer service cables to the distribution cables in urban underground systems.

Distribution/Mini Pillars must be effectively earthed. An earthing spike should be installed at the pillar location and this should be connected to the earthing terminal on each side of the pillar using 25x6mm/32x6mm earth conductor.

The neutral of each four core cable terminated in a distribution pillar should be bolted directly to a neutral bus which in turn should be directly connected to the pillar earth. Fused or isolating links should not be included in the neutral conductor as this is a potential safety hazard if the neutral is isolated when the phase remains alive.

4.6 Connection of Supply to Consumer's Premises

Supply to consumer premises through a 2 or 4 core overhead cable in situations where consumers are fed from the overhead system and a 2 or 4 core underground cable when fed from an urban underground system.

The connection arrangement for a single phase consumer shall be as per the relevant drawings. The residual current circuit breaker (RCCB) shown in the drawing is optional but the remainder of the circuit is mandatory. All components except the energy meter shall be provided by the consumer. The energy meter will be provided by BPC.

A new connection should not be livened unless;

- The consumer has installed an MCB as a point of isolation;
- The consumer has installed a stake earth, which is connected to a main earth terminal on the consumer's distribution board;
- Each and every power point is properly earthed;
- There is a link between the earth terminal and the incoming neutral. As shown in the drawing, the configuration of this connection will depend on whether or not the customer chooses to connect an RCCB.

:

Meteringmeters

SECTION VII – CONTRACT FORMS

SECTION VII - CONTRACT FORMS

(Form No. 1 to Form No. 4)

Applicable Forms from this Contract Forms section shall either be submitted by the successful Bidder or by Employer, post award of Contract.

FORM 1: NOTIFICATION OF AWARD

[Insert date]

To: *[name and address of the Contractor]*

Sub: Notification of Award for

Ref: Our NIT No: (*insert number and reference of the NIT*)

Dear Sir or Madam,

With reference to your Bid dated *[insert date]* for execution of the *[insert name of the Contract and identification number, as given in the SCC]* for the Contract Price of the equivalentof *[insert amount in numbers and words] [insert name of currency]*, as corrected and modifiedin accordance with the Instructions to Bidders is hereby accepted by our Agency.

[Insert one of the following (x) or (y) options if applicable]

(x) We accept that *[insert name proposed by Bidder]* be appointed as the Adjudicator.

(y) We do not accept that *[insert name proposed by Bidder] be* appointed as Arbitrator, and by sending a copy of this Notification of Award to *[insert name of the Appointing Authority] we* are hereby requesting *[insert name]*, the Appointing Authority, to appoint the Arbitrator in accordance with SCC 7.

The Contract in duplicate is attached hereto. Kindly be advised of the following:

a) Please confirm your acceptance of this Notification of Award by signing and dating both copies of it, and returning one copy to us no later than 15 days from the date hereof;
b) Please report to this office to sign the formal Contract Agreement within 15 (fifteen) days of the date of this Notification of Award.
c) Prior to the signing of Contract Agreement, you are required to submit performance security in the form of a Bank Guarantee/demand draft/cash warrant as per ITB clause 42 and GCC clause 17. The performance security may be submitted in advance or at the time of signing the contract agreement. The bank guarantee/demand draft/cash warrant should be in favour of (*insert appropriate name and designation*).
d) The stipulated commencement of the work shall be reckoned from the date of Contract signing.

Kindly acknowledge the receipt of this letter.

Yours sincerely,

[xyz]

FORM 2: CONTRACT AGREEMENT

This agreement is made the *[insert day]* day of *[insert month]*, *[insert year]* between *[insert name and address of Employer]* (hereinafter called "the Employer"), of the one part, and *[insert name and address of Contractor]* (hereinafter called "the Contractor") of the other part.

Whereas the Employer desires that the Contractor execute *[name and identification number of Contract]* (hereinafter called "the Works") and the Employer has accepted the Bid by the Contractor for the execution and completion of such Works and the remedying of any defects therein.

The Employer and the Contractor agree as follows:

a) In this Contract, words and expressions shall have the same meanings as are respectively assigned to them in the contract documents referred to.

b) The following documents shall be deemed to form and be read and construed as part of this Agreement:

i. The Notification of Award
ii. The Bid Submission Form
iii. The addenda Nos. (*insert addenda number if any*)
iv. The General Conditions of Contract
v. The Special Conditions of Contract
vi. The Technical Specifications
vii. The Drawings
viii. The Schedules

c) In consideration of the payments to be made by the Employer to the Contractor as hereinafter mentioned, the Contractor hereby covenants with the Employer to execute and complete the Works and remedy any defects therein in conformity in all respects with the provisions of the Contract.

d) The Employer hereby covenants to pay the Contractor in consideration of the execution and completion of the Works and the remedying of defects therein, the Contract Price or such other sum as may become payable under the provisions of the Contract at the times and in the manner prescribed by the Contract.

e) This Agreement shall prevail over all other Contract documents.

In Witness whereof the parties thereto have caused this Agreement to be executed on the day, month and year indicated above.

Sign & Seal of Contractor_____

Sign & Seal of witness of Contractor: _____

Sign & seal of Employer authorized representative:

_____

Binding signature of Employer's representative's signature:

FORM 3: BANK GUARANTEE FOR CONTRACT PERFORMANCE SECURITY

[To be provided on the relevant legal document, as per applicable law, in the country of execution]

Bank Guarantee No. .....

Date.....

To

[Employer's Address]

Dear Sir/Madam,

In consideration of Employer's name (hereinafter referred to as Employer which expression shall unless repugnant to the context or meaning thereof include its successors, administrators and assigns) having awarded to M/s ..... with its Registered/Head Office at .....(hereinafter referred to as the 'Contractor' which expression shall unless repugnant to the context or meaning thereof, include its successors, administrators, executors and assigns), a Contract by issue of Letter of Award No..... dated ..... valued at .....*[amount of foreign currency in words], [amount in figures], and [amount of local currency in words], [amount in figures]* ....., for .....*(InsertScope of Contract)* ..... and the Contractor having agreed to provide a Contract Performance Guarantee for the faithful performance of theentire Contract equivalent to ten percent (10%) of the said value of the Contract to Employer.

We .....*(insert Name and Address of the bank issuing the Guarantee)* ..... having its Head Office at ..... hereinafter referred to as the 'Bank' which expression shall, unless repugnant to the context ormeaning thereof include its successors, administrators, executors and assigns), do hereby guarantee and undertake to pay Employer, on demand any and all moniespayable by the Contractor to the extent of ..... *[insert amount of the Bank Guarantee and its currency]* ..... at any time up to .....@.....(day/month/year) without any demur, reservation, contest recourse or protest and or without any reference to the Contractor. Any such demand madeby Employeron the Bank shall be conclusive and binding notwithstanding any difference between Employer and the Contractor or any dispute pending before anyCourt, Tribunal or any other Authority. The Bank undertakes not to revoke this guarantee during its currency without prior consent of Employer.

Employer shall have the fullest liberty without affecting in any way the liability of the Bank under this guarantee from time to time to extend the time for performance of the Contract by the Contractor. Employer, shall have the fullest liberty, without affecting this guarantee to postpone from time totime the exercise of any powers vested in Employer or of any right which they might have against the Contractor and to exercise the same at any time and any manner, and either to enforce or to forbear to enforce any covenants, contained or implied in the Contract between Employer and the Contractor or any other course of remedy or security available to Employer. The Bank shall not be released of its obligations under these presents by any exercise by Employer of its liberty with reference to the matters aforesaid or any of them or by reason or any

other acts of omission or commission on the part of Employer or any other indulgence shown by Employer or by any other matter or thing whatsoever which under the law would but for these provisions have the effect of relieving the Bank.

The Bank also agrees that Employer at its option shall be entitled to enforce this guarantee against the Bank as a Principal debtor, in the first instance without proceeding against the Contractor and notwithstanding any security or other guarantee that Employermay have in relation to the Contractor's liabilities.

Notwithstanding anything contained herein above, our liability under this guarantee is restricted to ..... and shall remain in force up to and including ..... and shall be extended from time to time for such period, as may be desired by M/s ..... on whose behalf this guarantee has been given.

All rights of Employer under this guarantee shall be forfeited and the Bank shall be relieved and discharged from all liabilities after the above-mentioned date or from the extended date.

Dated this .....day of .....20 ..... at .....

Witness:

.....	.....
(signature)	(signature)
.....	.....
(Name)	(Name)
.....	.....
(Official address)	(Official adress)

Authorized vide
Power of Attorney No.....
Date.....

Note:	(@) This date shall be ninety (90) days beyond the scheduled end of Defect Liability Period of the last equipment covered under the Contract (#) Complete mailing address of the Head Office of the Bank to be given

FORM 4: BANK GUARANTEE FOR ADVANCE PAYMENT

[To be provided on the relevant legal document, as per applicable law, in the country of execution]

Bank Guarantee No. .....

Date.....

To

[Employer's address]

Dear Sir/Madam,

In consideration of the Employeral Corporation Ltd (hereinafter referred to as Employer) which expression shall unless repugnant to the context or meaning thereof include its successors, administrators, executors and assigns having awarded to M/s..... with its registered/Head Office at ..... (Here-in-after referred to as the Contractor) which expression shall unless repugnant to the context or meaning thereof, include its successors, administrators, executors and assigns, a Contract by issue of Employer 's Notification of Award No. ..... dated ..... and the same having been unequivocally accepted by the Contractor resulting in a 'Contract', dated ..... valued at .....*[amount of foreign currency in words], [amount in figures], and [amount of local currency in words], [amount in figures]* ..... for ..... *(insert Scope of Contract)* ..... (Hereinafter called the Contract) and Employer having agreed to make advance payment to the Contractor for performance of the above Contract amounting to .....*[insert currency and amount of the advance]* ....., as an advance against Bank Guarantee to be furnished by the Contractor.

We, ... *[Insert name and address of the bank issuing Branch]* ..... having its Head Office at ..... (Hereinafter referred to as the 'Bank' which expression shall, unless repugnant to the context of meaning thereof, include its successors, administrators, executors and assigns) do hereby guarantee and undertake to pay Employer immediately on demand any or all monies payable by the Contractorto theextent of ..... *[insert currency and amount of the advance]*.....at any time up to .....@..... without any demur, reservation, contest, recourse or protest and/or without any reference to the Contractor. Any such demand made by Employer on the Bank shall be conclusive and binding not withstanding any difference between Employer and the Contractor or any dispute pending before any Court, Tribunal, Arbitrator or any other Authority.

Employer shall have the fullest liberty without affecting in any way the liability of the Bank under this guarantee from time to time to vary the advance or to extend the time for performance of the Contract by the Contractor. Employer shall have the fullest liberty, without affecting this guarantee to postpone from time to time the exercise of any powers vested in them or of any right which they might have against the Contractor and to exercise the same at any time in any manner and either to enforce or to forbear to enforce any covenants contained or implied in the Contract between the Employer and the Contractor or any other course or remedy or security available to Employer. The Bank shall not be released of its obligations underthese presents by

any exercise by Employer of its liberty with reference to the matters aforesaid or any of them or by reason of any other act or forbearance or other acts of omission or commission on the part of Employer or any other indulgence shown by Employer or by any other matter or thing whatsoever which under law would, but for this provision, have the effect of relieving the Bank.

The Bank also agrees that Employer at its option shall be entitled to enforce this Guarantee against the Bank as a principal debtor, in the firstinstance without proceeding against the Contractor and notwithstanding any security or other guarantee that Employer may have in relation to the Contractor's liabilities.

Notwithstanding anything contained hereinabove our liability under this guarantee is limited to..... *[insert currency and amount of the advance]*..... and it shallremain in force up to and including ..... and shall be extended from time to time for such period as may be desired by M/s ..... on whose behalf this guarantee has been given.

All rights of Employer under this guarantee shall be forfeited and the Bank shall be relieved and discharged from all liabilities after the above-mentioned date or from the extended date.

Dated this .....day of .....20 ..... at .....

Witness:

.....	.....
(Signature)	(Signature)
.....	.....
(Name)	(Name)
.....	.....
(Official Address)	(Official Address)

Attorney as per

Power of Attorney No: .....

Date.....

Note:	(@) This date shall be ninety (90) days beyond the schedule date of Completion of the last Facility covered under the Contract.

DRAWINGS

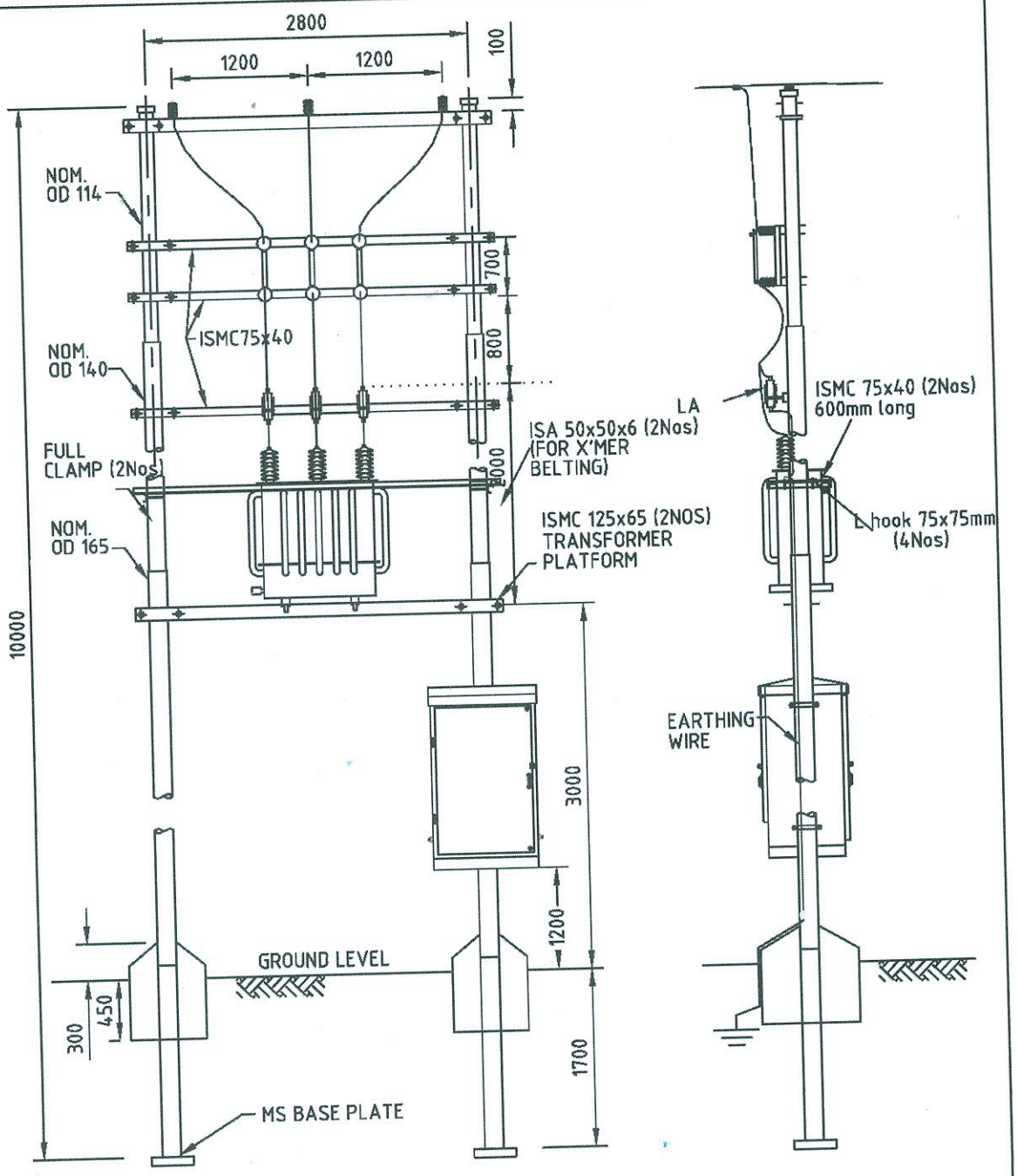

NOTES

1. DIMENSIONS AS SHOWN ARE IN mm.
2. MOUNTING HEIGHT OF THE TOP DO FUSE TO BE ADJUSTED WITHIN 6M FOR USE OF HOT STICK

BHUTAN POWER CORPORATION LIMITED	ENGINEERING & DESIGN DIVISION	
	DISTRIBUTION DESIGN & CONSTRUCTION STANDARD INTERMEDIATE POLE SUBSTATION TYPE "B" ARRANGEMENT	
DRAWING NO. BPC-DDCS-2015-10		REVISION 2015

DESIGNATION	NAME	DATE
DRAFTSMAN		
DESIGNER		
DESIGN CHECK		
PROJECT MANAGER		
PROJECT DIRECTOR		

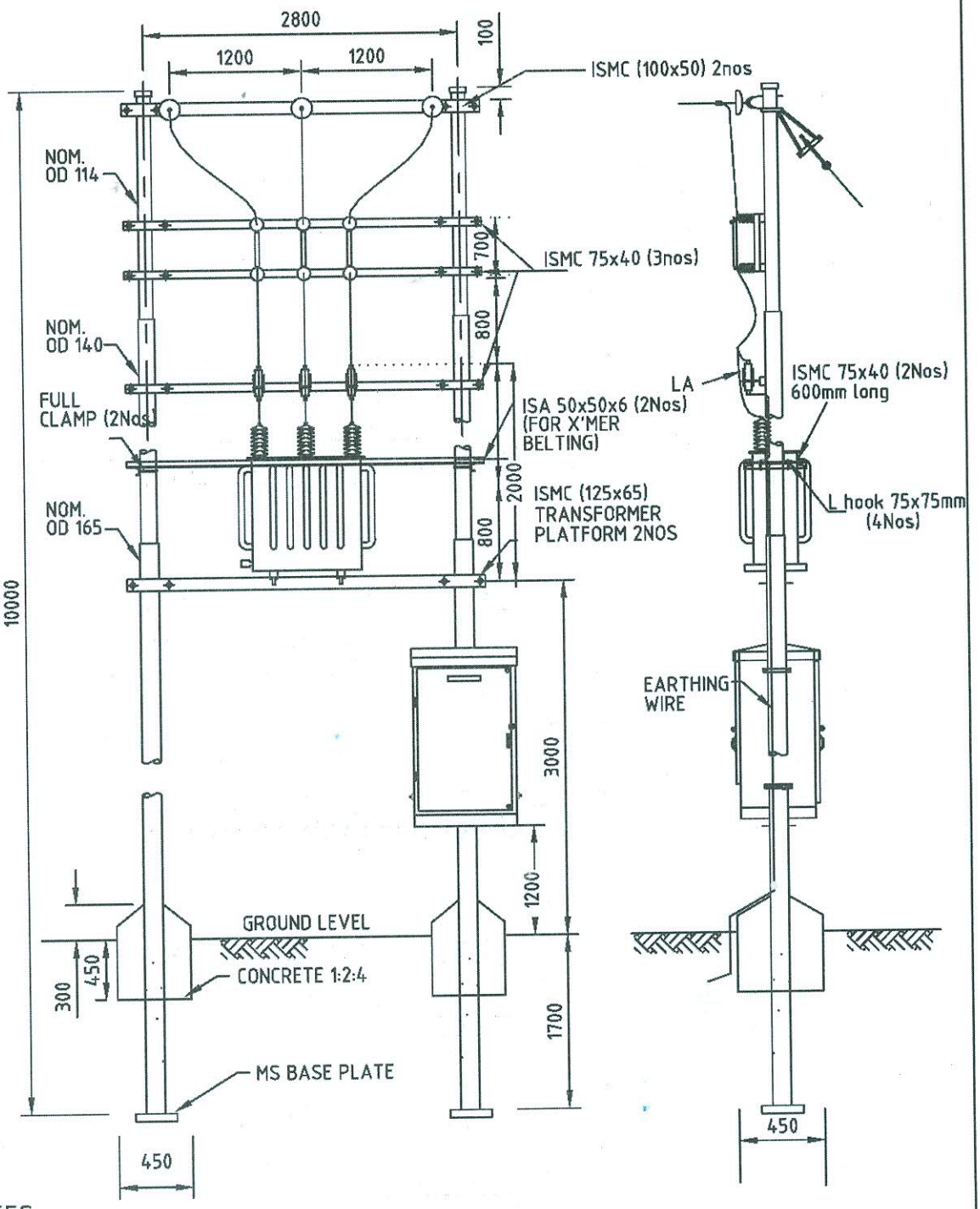

NOTES

1. DIMENSIONS AS SHOWN ARE IN mm.
2. MOUNTING HEIGHT OF THE TOP DO FUSE TO BE ADJUSTED WITHIN 6M FOR USE OF HOT STICK

BHUTAN POWER CORPORATION LIMITED	ENGINEERING DESIGN & CONTRACTS DEPARTMENT	
	DISTRIBUTION DESIGN & CONSTRUCTION STANDARD TERMINATION POLE SUBSTATION TYPE "A" ARRANGEMENT	
	DRAWING NO. BPC-DDCS-2015-9	REVISION 2015

DESIGNATION	NAME	DATE
DRAFTSMAN		
DESIGNER		
DESIGN CHECK		
PROJECT MANAGER		
PROJECT DIRECTOR		

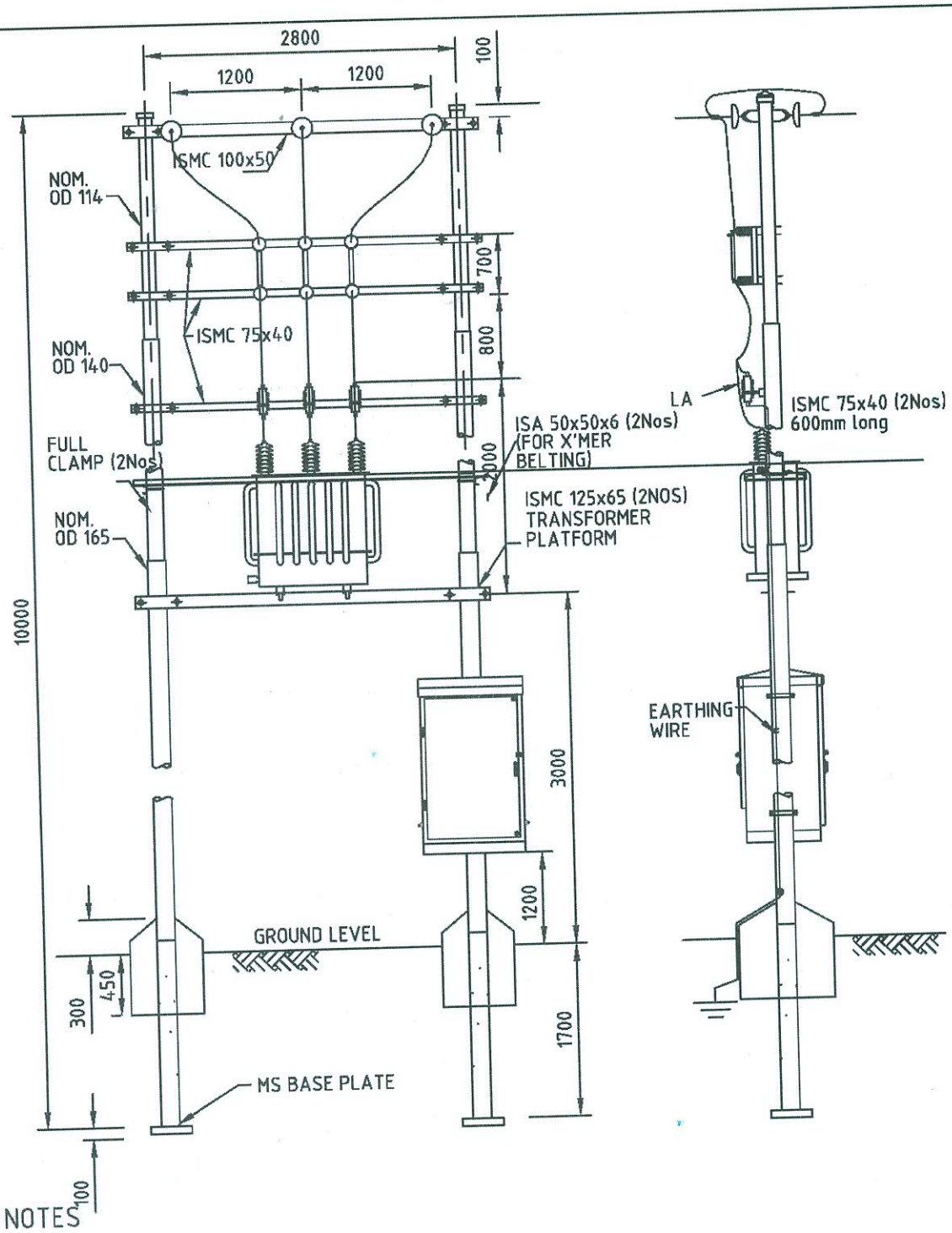

NOTES

1. DIMENSIONS AS SHOWN ARE IN mm.
2. MOUNTING HEIGHT OF THE TOP DO FUSE TO BE ADJUSTED WITHIN 6M FOR USE OF HOT STICK

BHUTAN POWER CORPORATION LIMITED	ENGINEERING DESIGN & CONTRACTS DEPARTMENT	
	DISTRIBUTION DESIGN & CONSTRUCTION STANDARD	
	TENSION POLE SUBSTATION TYPE " C " ARRANGMENT	
DESIGNATION / NAME / DATE	DRAWING NO. BPC-DDCS-2015-11	REVISION 2015
DRAFTSMAN		
DESIGNER		
DESIGN CHECK		
PROJECT MANAGER		
PROJECT DIRECTOR		

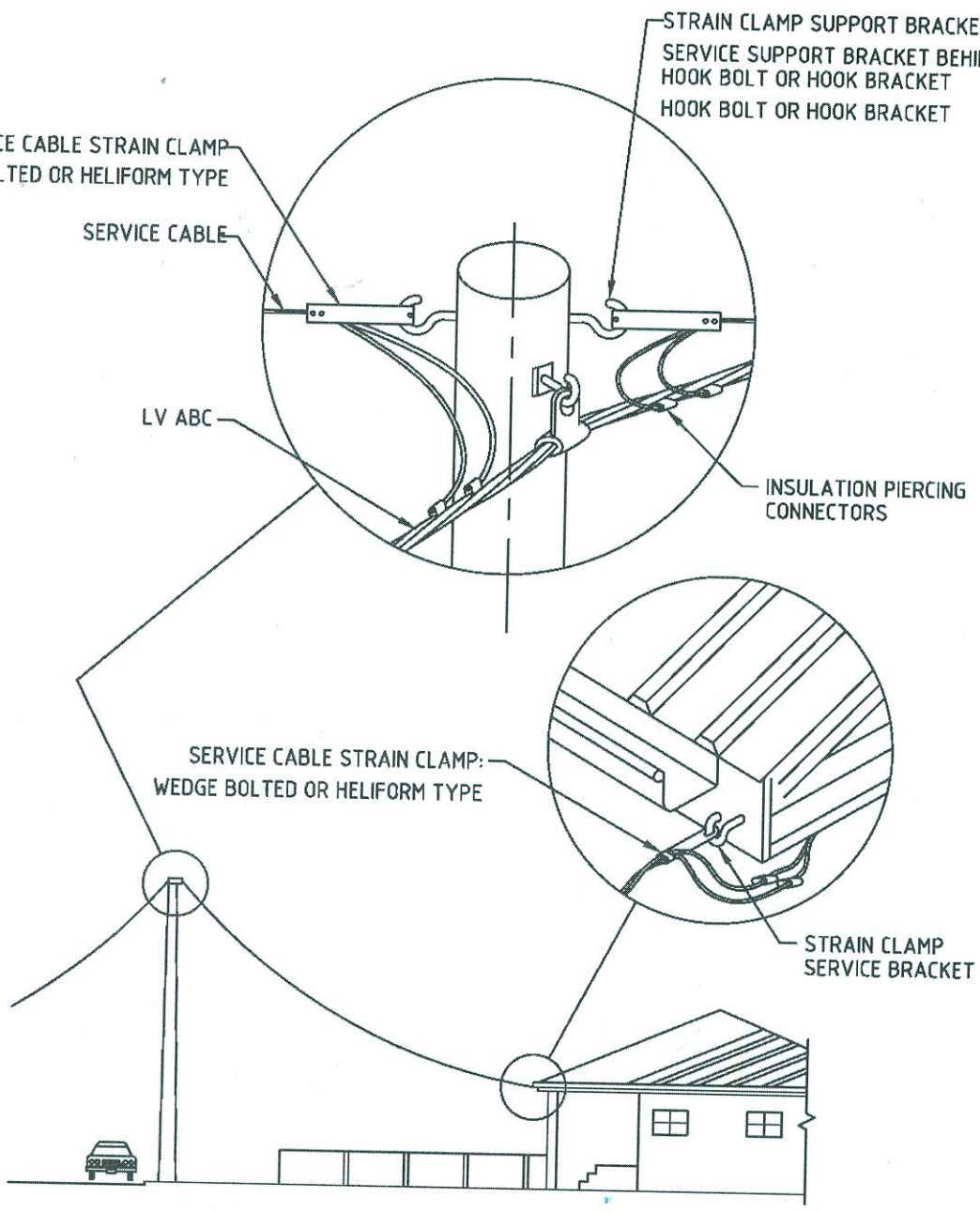

NOTES

1. DIMENSIONS AS SHOWN ARE IN mm.
2. DRAWING IS NOT TO SCALE.

BPC	BHUTAN POWER CORPORATION LIMITED	ENGINEERING DESIGN & CONTRACTS DEPARTMENT	
		DISTRIBUTION DESIGN AND CONSTRUCTION STANDARDS LV ABC TYPICAL SERVICE LAYOUT ARRANGEMENT	
DESIGNATION	NAME	DATE	
DRAFTSMAN			
DESIGNER			
DESIGN CHECK			
PROJECT MANAGER			
PROJECT DIRECTOR			
		DRAWING NO. BPC - DDCS -2015-14	REVISION 2015

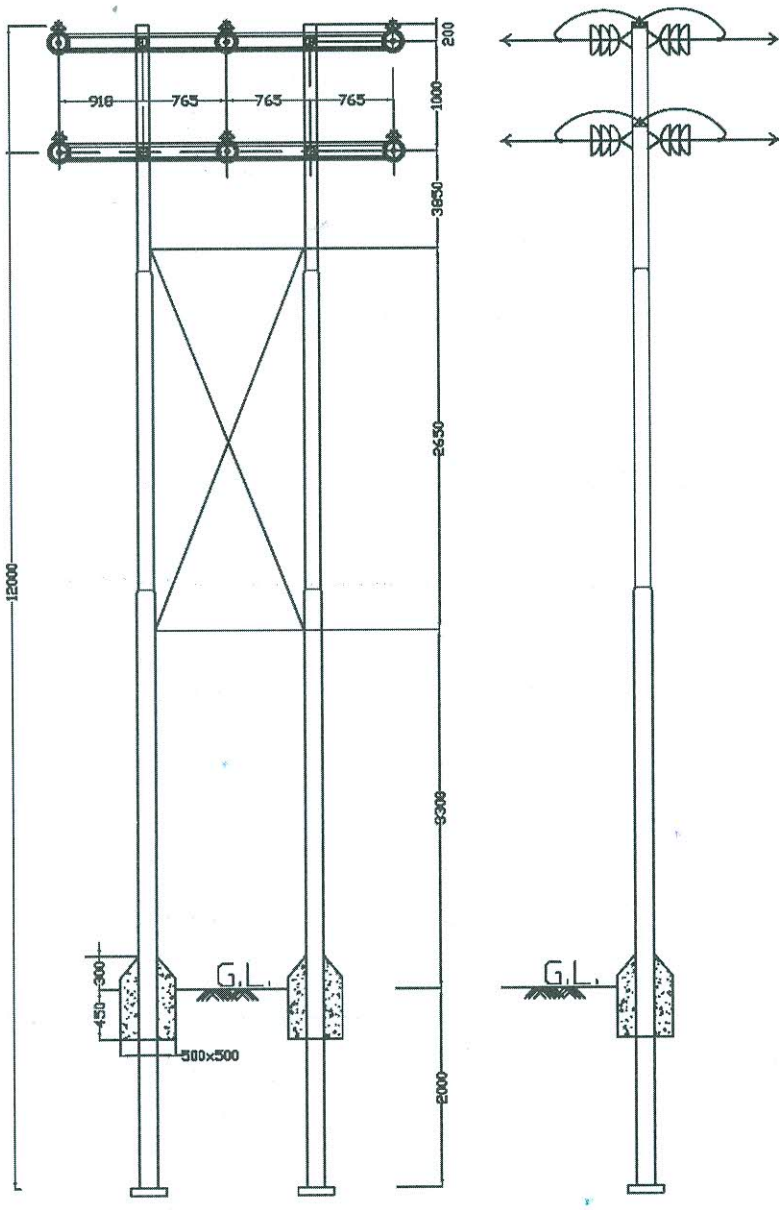

BHUTAN POWER CORPORATION LIMITED	ENGINEERING DESIGN & CONTRACTS DEPARTMENT	
	DISTRIBUTION DESIGN & CONSTRUCTION STANDARD 33 kV, D - CKT, POLE STRUCTURE (HORIZONTAL CONFIGURATION)	
	DRAWING NO. BPC-DDCS-2015-13/A	REVISION 2015

DESIGNATION	NAME	DATE
DRAFTSMAN		
DESIGNER		
DESIGN CHECK		
PROJECT MANAGER		
PROJECT DIRECTOR		

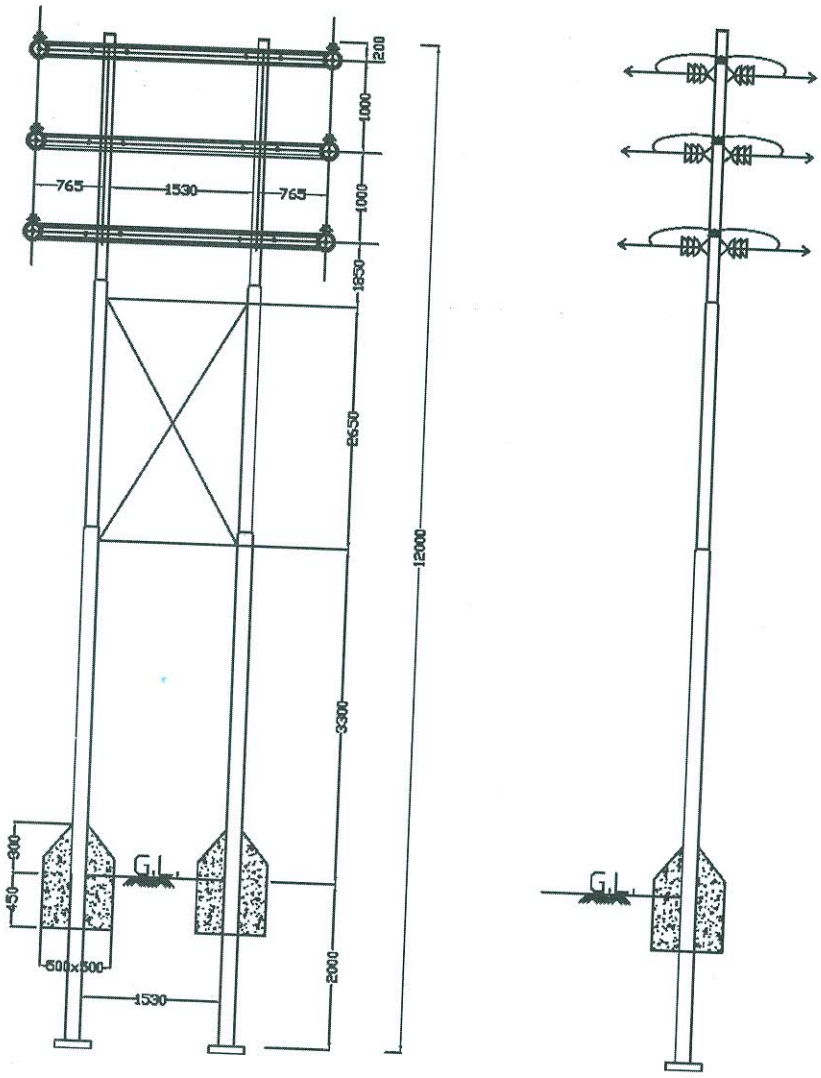

BHUTAN POWER CORPORATION LIMITED	ENGINEERING DESIGN & CONTRACTS DEPARTMENT	
	DISTRIBUTION DESIGN & CONSTRUCTION STANDARD	
	33 kV, D - CKT, POLE STRUCTURE (VERTICAL CONFIGURATION)	
	DRAWING NO. BPC-DDCS-2015-13/B	REVISION 2015

DESIGNATION	NAME	DATE
DRAFTSMAN		
DESIGNER		
DESIGN CHECK		
PROJECT MANAGER		
PROJECT DIRECTOR		

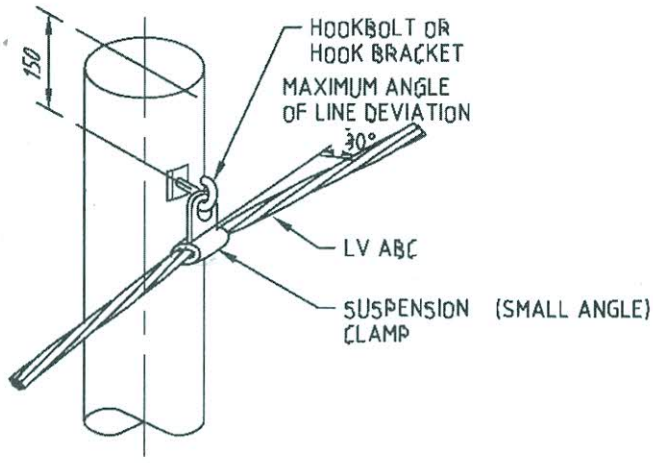

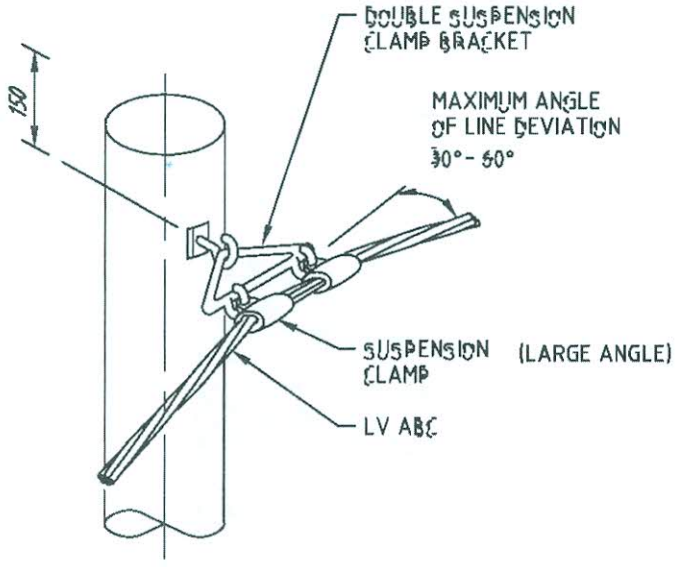

NOTES

1. DIMENSIONS AS SHOWN ARE IN mm.
2. DRAWING IS NOT TO SCALE.

BHUTAN POWER CORPORATION LIMITED			ENGINEERING DESIGN & CONTRACTS DEPARTMENT
			DISTRIBUTION DESIGN & CONSTRUCTION STANDARD LV ABC INTERMEDIATE & ANGLE POLES DETAILS
DESIGNATION	NAME	DATE	
DRAFTSMAN			
DESIGNER			
DESIGN CHECK			DRAWING NO. BPC-DDCS-2015-15
PROJECT MANAGER			REVISION 2015
PROJECT DIRECTOR			

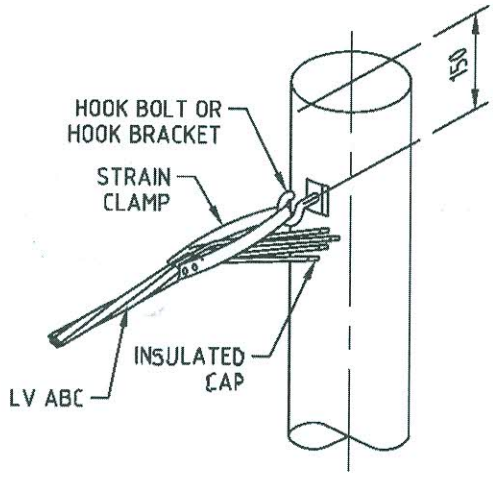

ALLOW SUFFICIENT CABLE TAIL
TO ALLOW FOR FUTURE EXTENSION

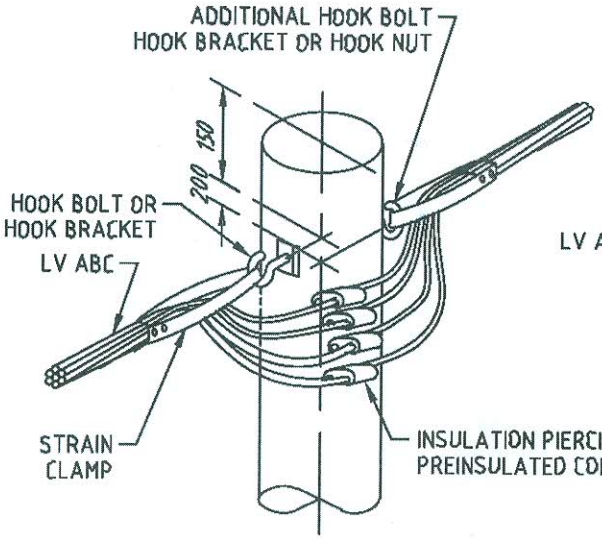

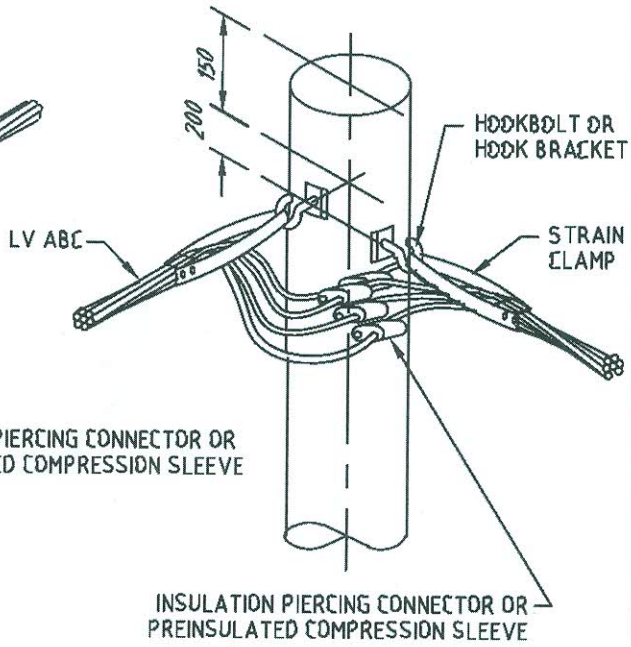

FIELD CONDITIONS MAY ALLOW
CABLE TO BE CONTINUOUS AT POLE

NOTES

1. DIMENSIONS AS SHOWN ARE IN mm.
2. DRAWING IS NOT TO SCALE.

BPC BHUTAN POWER CORPORATION LIMITED			ENGINEERING DESIGN & CONTRACTS DEPARTMENT
DESIGNATION	NAME	DATE	TITLE : DISTRIBUTION DESIGN & CONSTRUCTION STANDARD LV ABC TERMINATION & ANCHOR POLES DETAILS
DRAFTSPERSON			
DESIGNER			
PROJECT MANAGER			DRAWING NO. BPC - DDCS - 2015-16 — REV 2015
HEAD OF DEPARTMENT			

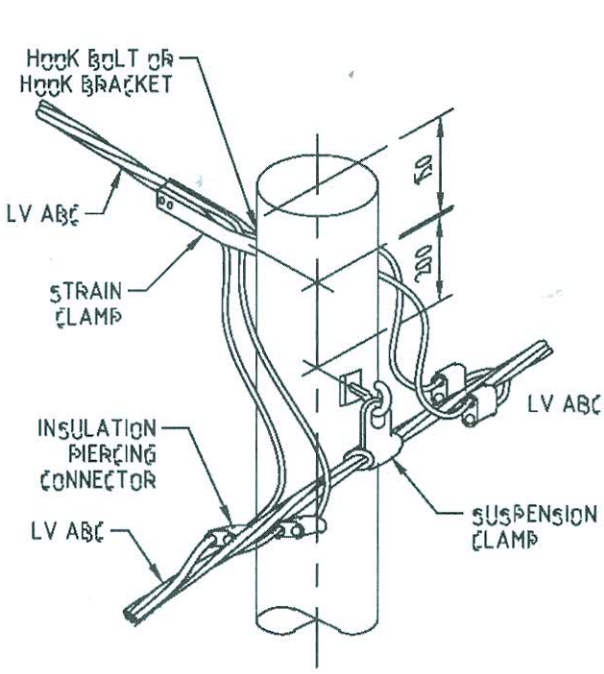

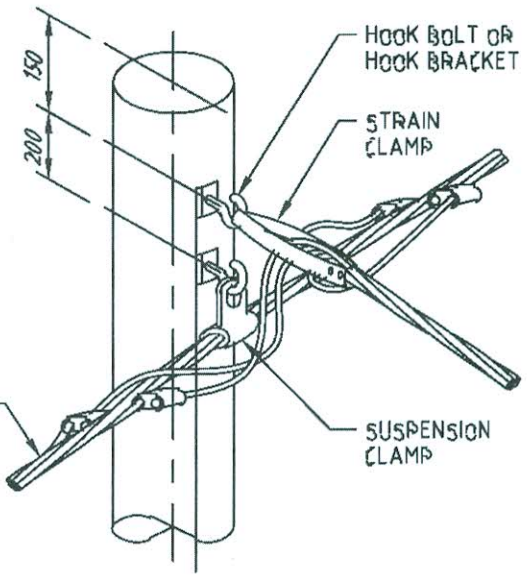

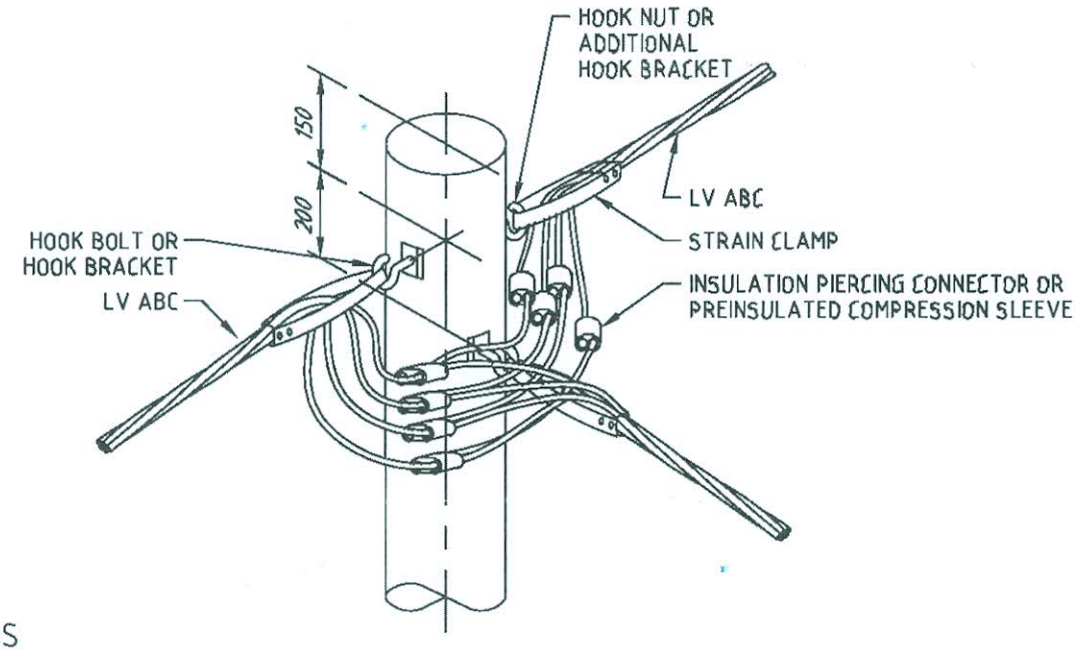

NOTES

1. DIMENSIONS AS SHOWN ARE IN mm.
2. DRAWING IS NOT TO SCALE.

BHUTAN POWER CORPORATION LIMITED			ENGINEERING DESIGN & CONTRACTS DEPARTMENT
DESIGNATION	NAME	DATE	DISTRIBUTION DESIGN & CONSTRUCTION STANDARD LV ABC TEE POLE DETAILS
DRAFTSPERSON			
DESIGNER			
PROJECT MANAGER			DRAWING NO. BPC - DDCS - 2015-17 / REVISION 2015
HEAD OF DEPARTMENT			

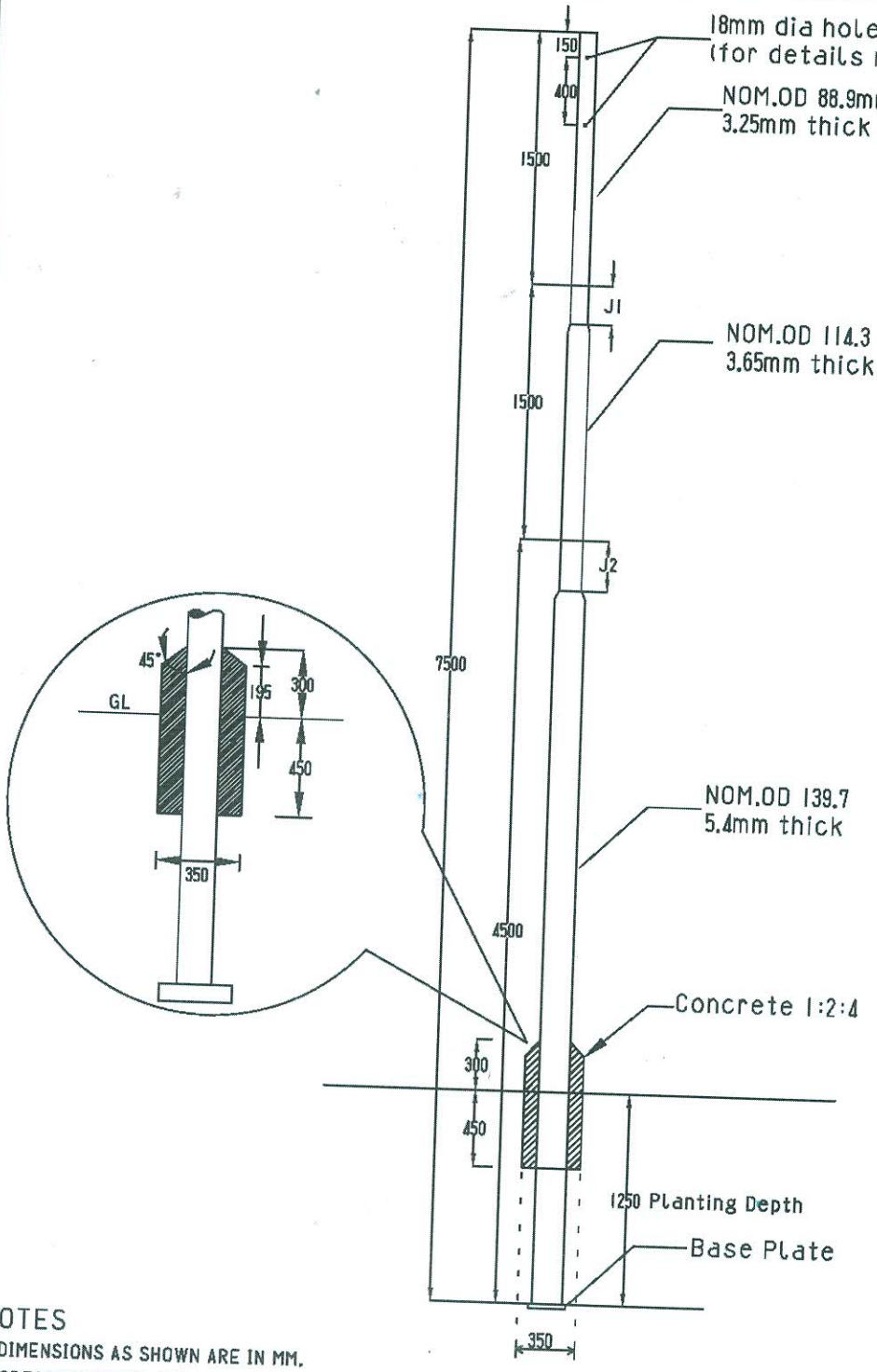

NOTES

1. DIMENSIONS AS SHOWN ARE IN MM.
2. SPECIFICATIONS AS PER IS:2713 (PART I TO III : 1980)
3. POLE TOP CAP -M.S. PLATE WOULD BE TAG WELDED TO THE POLE

BHUTAN POWER CORPORATION LIMITED		ENGINEERING DESIGN & CONTRACTS DEPARTMENT	
		DISTRIBUTION DESIGN & CONSTRUCTION STANDARD	
	NAME	DATE	7.5 METERS SWAGED POLE ASSEMBLY
DESIGNED BY			
CHECKED BY			
APPROVED BY			DRAWING NO. BPC-DDCS-2015-18 / REVISION 2015

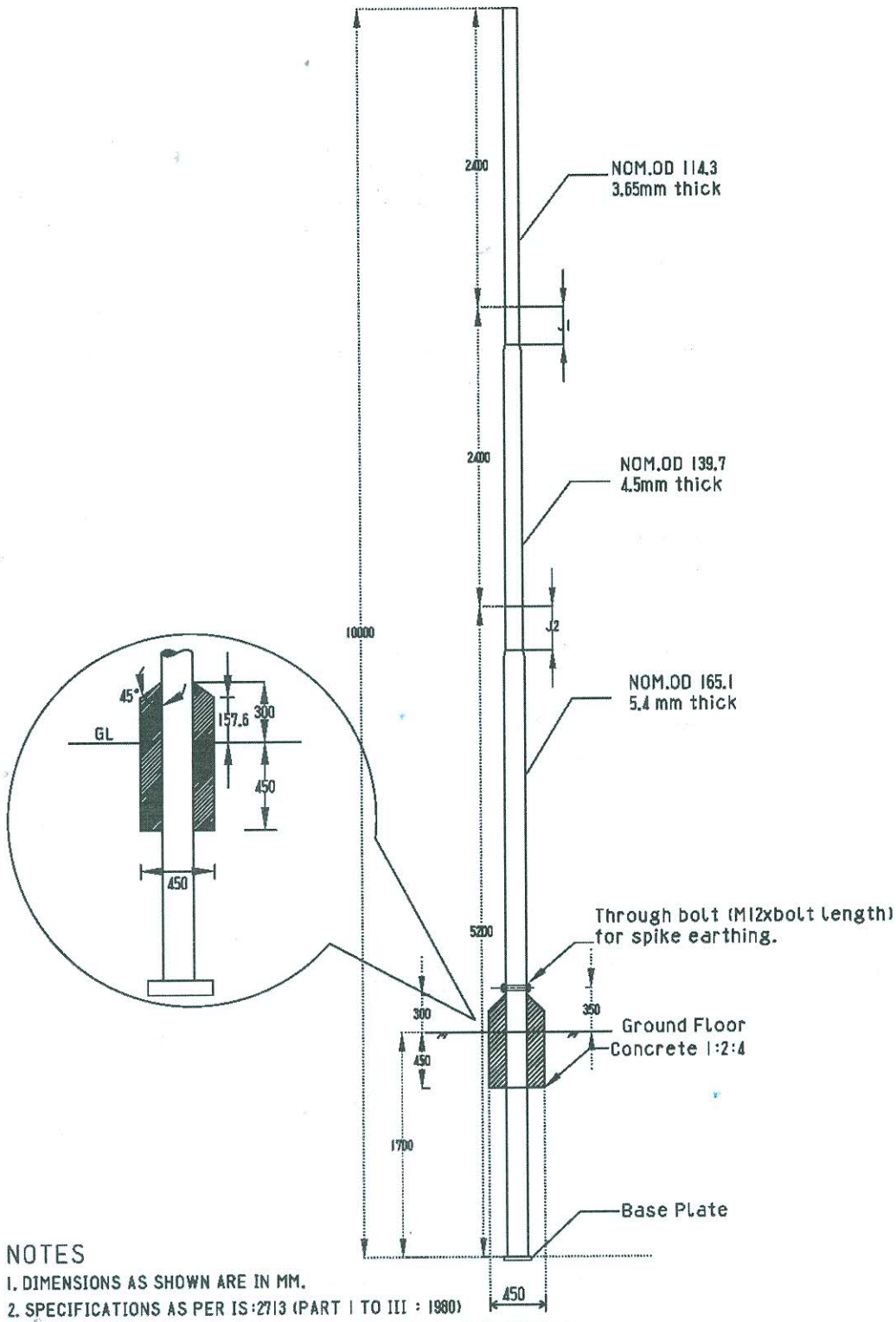

NOTES

1. DIMENSIONS AS SHOWN ARE IN MM.
2. SPECIFICATIONS AS PER IS:2713 (PART I TO III : 1980)
3. POLE TOP CAP -M.S. PLATE WOULD BE TAG WELDED TO THE POLE

BHUTAN POWER CORPORATION LIMITED		ENGINEERING DESIGN & CONTRACTS DEPARTMENT	
		DISTRIBUTION DESIGN & CONSTRUCTION STANDARD	
	NAME	DATE	10 METER SWAGED POLE ASSEMBLY
DESIGNED BY			
CHECKED BY			DRAWING NO. BPC-DDCS-2015-20 / REVISION 2015
APPROVED BY			

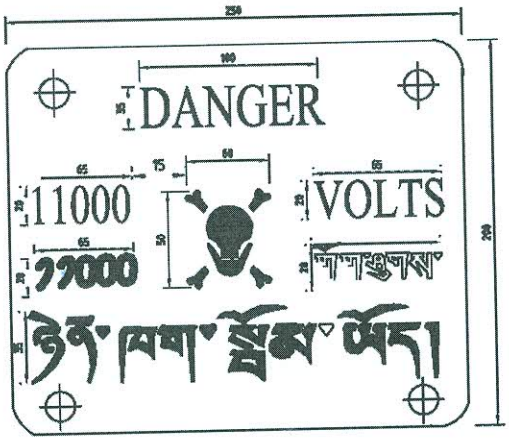

1. DIMENSIONS AS SHOWN ARE IN MM
2. MS PLATE SHALL BE 2MM THICK
3. LETTERING AND FIGURE: RED ENAMELED
   BACK GROUND: WHITE ENAMELED
   BACK OF THE PLATE: BLACK ENAMELED
4. DESIGN OF DANGER PLATE IS AS PER IS:2551
5. CORNERS OF THE PLATE SHALL BE ROUND OFF
6. FASTERNERS PER PLATE: 4 NOS. 16MM DIA WITH GI BOLTS
7. ONE DANGER PLATE PER STRUCTURE

BHUTAN POWER CORPORATION LIMITED	ENGINEERING DESIGN & CONTRACTS DEPARTMENT	
	DISTRIBUTION DESIGN & CONSTRUCTION STANDARD DANGER PLATE FOR 33kV and 11KV POLE	
DESIGNATION / NAME / DATE DRAFTSMAN DESIGNER DESIGN CHECK PROJECT MANAGER PROJECT DIRECTOR	DRAWING NO. BPC-DDCS-2015-28	REVISION 2015

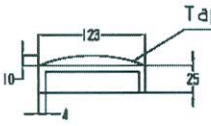

POLE CAP DETAILS(Welded to the pole)

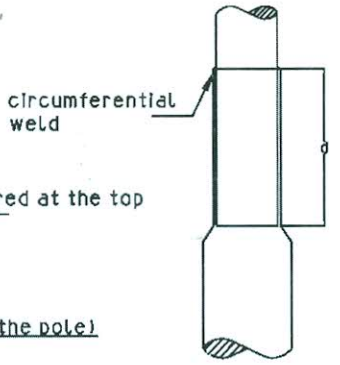

WELDED JOINT J1 DETAILS

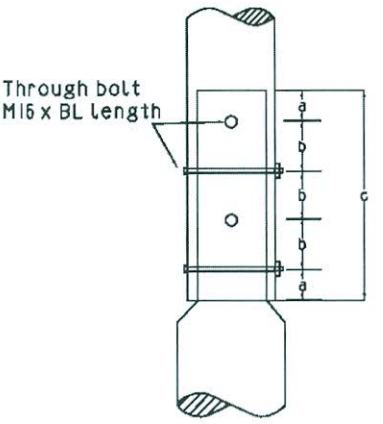

BOLTED JOINT J2 DETAILS

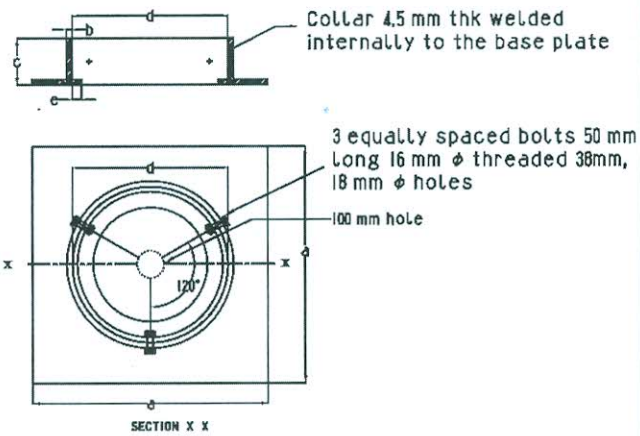

DETAILS OF MS BASE PLATE (Seperately packed)

Pole Type			10 M (410-SP-45)
Length		mm	10000
Top Segment	OD	mm	114.3
	Thickness	mm	3.65
	Length	mm	2400
Middle Segment	OD	mm	139.7
	Thickness	mm	4.5
	Length	mm	2400
Bottom Segment	OD	mm	165.1
	Thickness	mm	5.4
	Length	mm	5200
Joint J1	Welded Joint		
	d	mm	900
Joint J2	a	mm	55
	b	mm	80
	c	mm	350
	BL	mm	180
Planting Depth		mm	1700
Base plate details	a	mm	250
	b	mm	6
	c	mm	70
	d	mm	165.1
	e	mm	10

NOTES

1. DIMENSIONS AS SHOWN ARE IN MM.
2. DRAWING NOT TO SCALE.
3. SPECIFICATIONS AS PER IS:2713 (PART I TO III : 1980)
4. POLE TOP CAP -M.S. PLATE WOULD BE TAG WELDED TO THE POLE

BHUTAN POWER CORPORATION LIMITED			ENGINEERING DESIGN & CONTRACTS DEPARTMENT	
			DISTRIBUTION DESIGN & CONSTRUCTION STANDARD	
	NAME	DATE	10 METER SWAGED POLE DETAILS	
DESIGNED BY				
CHECKED BY			DRAWING NO. BPC-DDCS-2015-21	REVISION 2015
APPROVED BY				

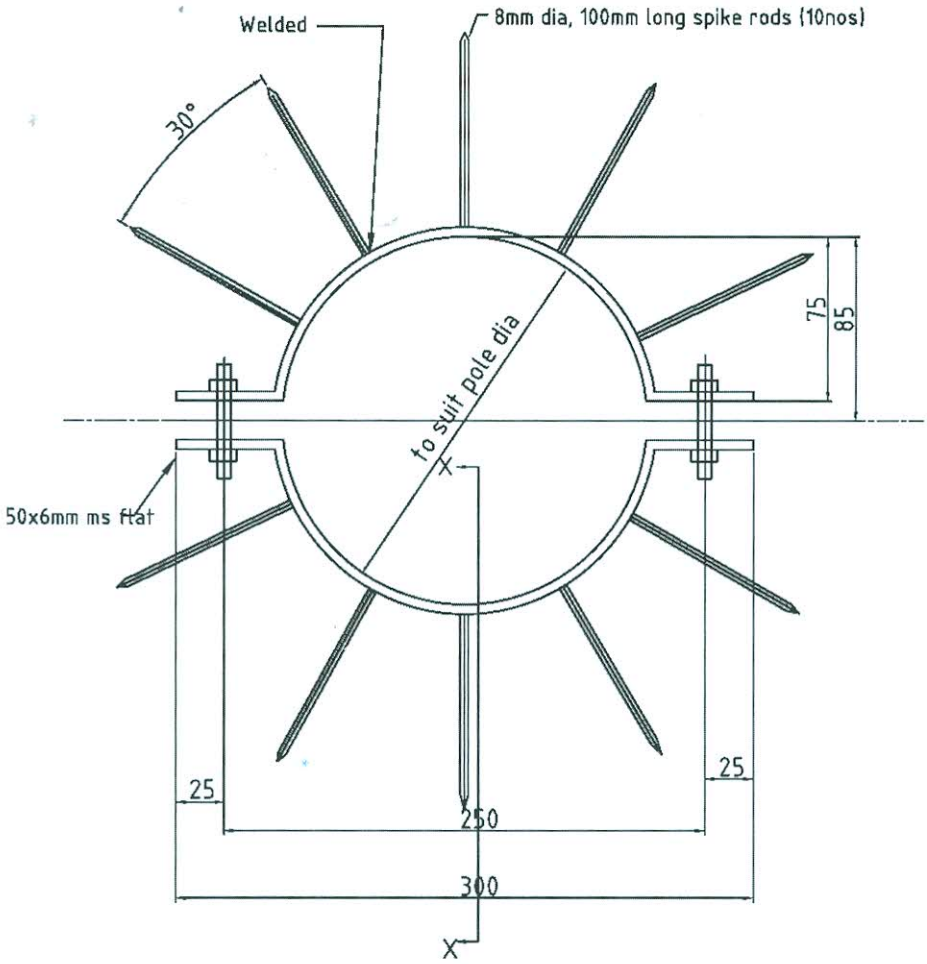

section X-X

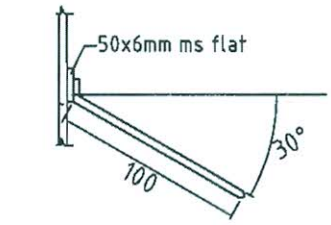

NOTES

1. FERROUS PARTS HOT DIP GALVANIZED AS PER BS-729
2. DIMENSIONS AS SHOWN ARE IN mm.
3. TOLERANCE ±5%
4. DRAWING IS NOT TO SCALE.
5. ONE NUMBER PER POLE

BHUTAN POWER CORPORATION LIMITED	ENGINEERING DESIGN & CONTRACTS DEPARTMENT	
	DISTRIBUTION DESIGN & CONSTRUCTION STANDARD ANTI-CLIMBING DEVICE	
DRAWING NO. BPC-DDCS-2015-27		REVISION 2015

DESIGNATION	NAME	DATE
DRAFTSMAN		
DESIGNER		
DESIGN CHECK		
PROJECT MANAGER		
PROJECT DIRECTOR		

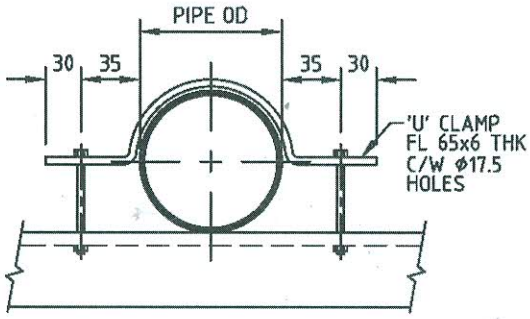

1 'U' CLAMP

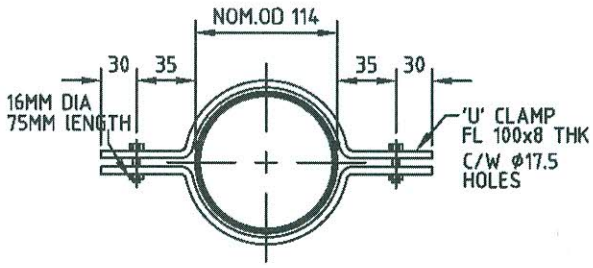

4 STAY CLAMP

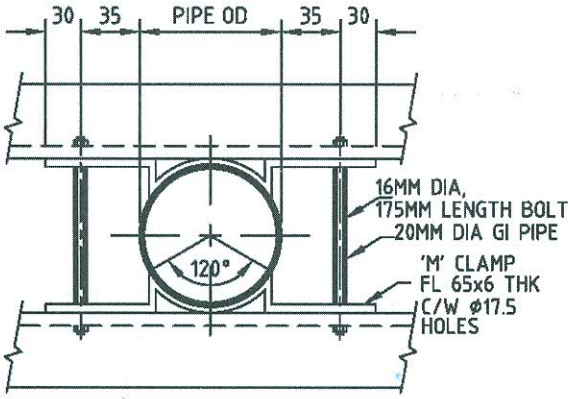

2 'M' CLAMP

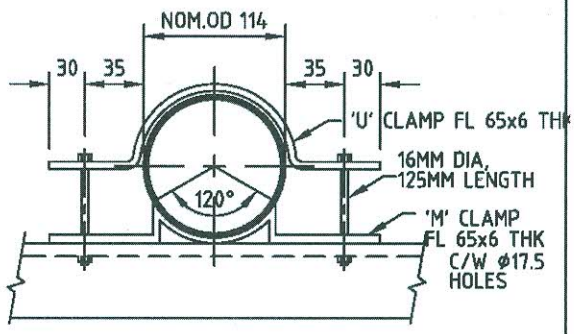

5 CROSS ARM CLAMP (U+M)

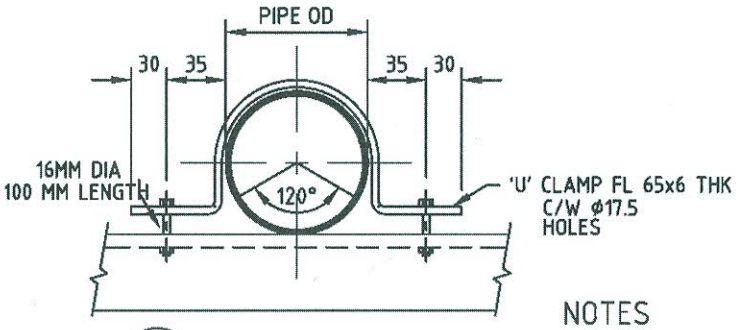

3 FULL CLAMP

NOTES

1. DIMENSIONS AS SHOWN ARE IN mm.
2. DRAWING IS NOT TO SCALE.
3. ALL BOLTS TO BE ϕ16 C/W NUTS & SPRING WASHERS.

BHUTAN POWER CORPORATION LIMITED			ENGINEERING DESIGN & CONTRACTS DEPARTMENT
			TITLE : DISTRIBUTION DESIGN & CONSTRUCTION STANDARD 33 & 11 kV CLAMP DETAILS FOR STEEL TUBULAR POLE
DESIGNATION	NAME	DATE	
DRAFTSMAN			
DESIGNER			
DESIGN CHECK			DRAWING NO. BPC-DDCS-2015-30 / REVISION 2015
PROJECT MANAGER			
PROJECT DIRECTOR			

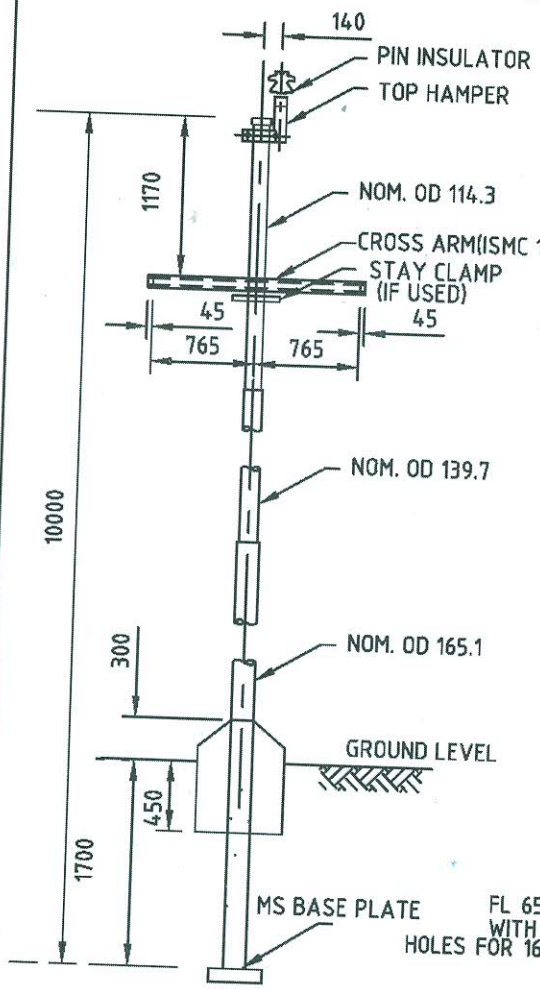

POLE & CROSS ARM ASSEMBLY

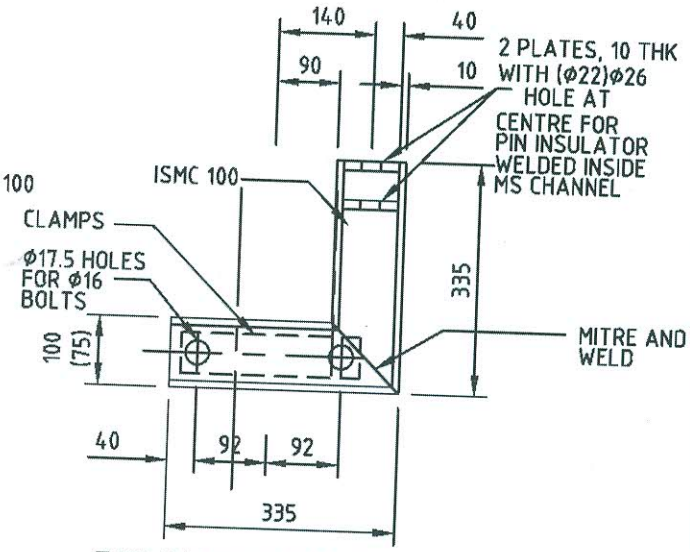

TOP HAMPER FOR INSULATOR PIN DETAIL

CLAMP DETAILS (U+M) (2 sets)

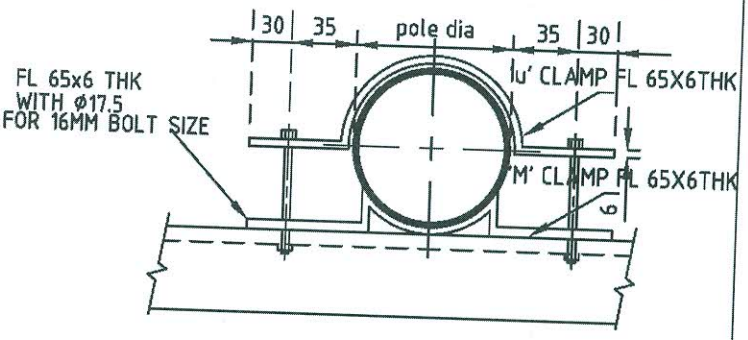

NOTES

1. DIMENSIONS AS SHOWN ARE IN mm
2. DRAWING IS NOT TO SCALE.
3. ALL NUTS AND BOLTS TO BE HOT DIPPED GALVANISED

DESCRIPTION	QTY	MATERIAL
10M STEEL TUBULAR POLE	1	STEEL
CROSSARM CHANNEL	1	MS
TOP HAMPER WELDED IN "L" SHAPE	1	MS
PIN INSULATOR	3	PORCELAIN
CLAMP WITH NUTS & BOLTS (U+M)	2	MS
STAY SET ASSEMBLEY	1	MS
BASE PLATE	1	MS

BHUTAN POWER CORPORATION LIMITED

DESIGNATION	NAME	DATE
DRAFTSMAN		
DESIGNER		
DESIGN CHECK		
PROJECT MANAGER		
PROJECT DIRECTOR		

ENGINEERING DESIGN & CONTRACTS DEPARTMENT

DISTRIBUTION DESIGN & CONSTRUCTION STANDARD

STEEL TUBULAR-SINGLE POLE STRUCTURE DETAILS
11 & 33 kV

DRAWING NO. BPC-DDCS-2015-31

REVISION
2015

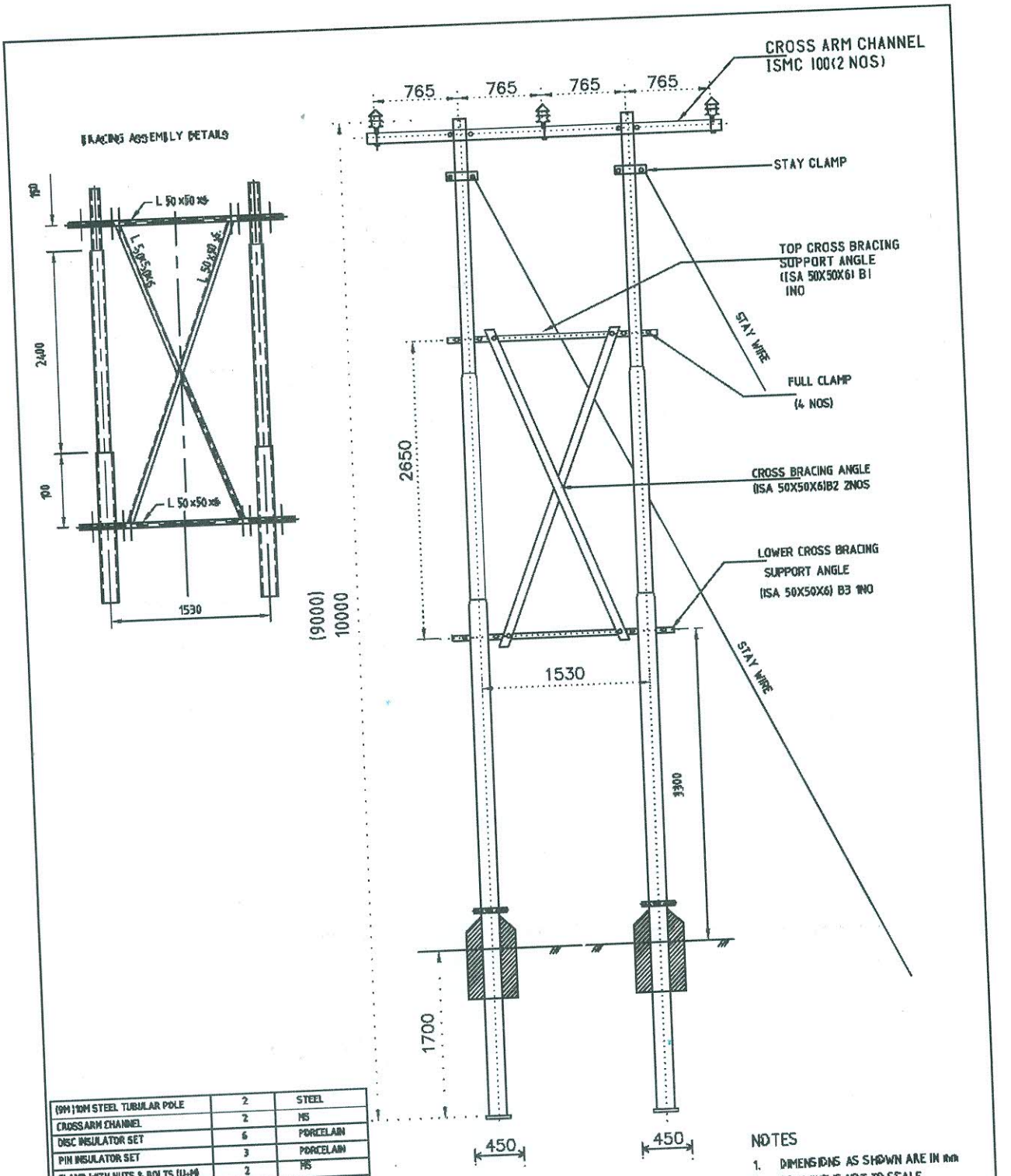

DESCRIPTION	QTY	MATERIAL
(9M)10M STEEL TUBULAR POLE	2	STEEL
CROSSARM CHANNEL	2	MS
DISC INSULATOR SET	6	PORCELAIN
PIN INSULATOR SET	3	PORCELAIN
CLAMP WITH NUTS & BOLTS (U+M)	2	MS
STAY SET ASSEMBLEY	2	MS
BASE PLATE	2	MS

NOTES

1. DIMENSIONS AS SHOWN ARE IN mm
2. DRAWING IS NOT TO SCALE.

BHUTAN POWER CORPORATION LIMITED

DESIGNATION	NAME	DATE
DRAFTSMAN		
DESIGNER		
DESIGN CHECK		
PROJECT MANAGER		
PROJECT DIRECTOR		

ENGINEERING DESIGN & CONTRACTS DEPARTMENT

DISTRIBUTION DESIGN & CONSTRUCTION STANDARD

11&33 KV H-FRAME

DOUBLE POLE ARRANGEMENT (STEEL TUBULAR POLES)

DRAWING NO. BPC-DDCS-2015-32/1

REVISION 2015

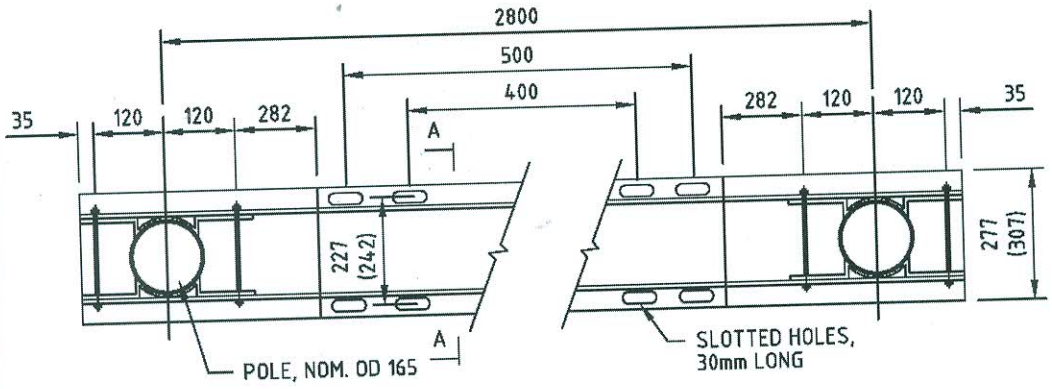

TRANSFORMER PLATFORM (2Nos.)

ISMC 125x65

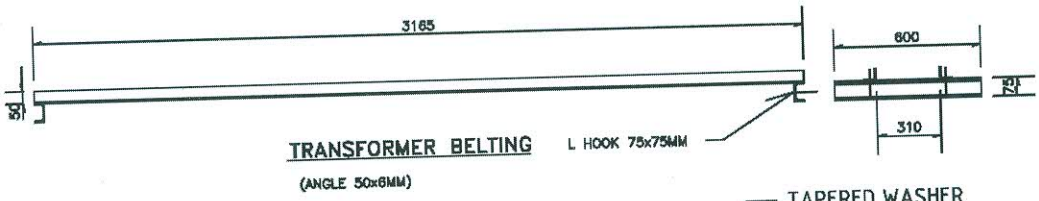

TRANSFORMER BELTING

(ANGLE 50x6MM)

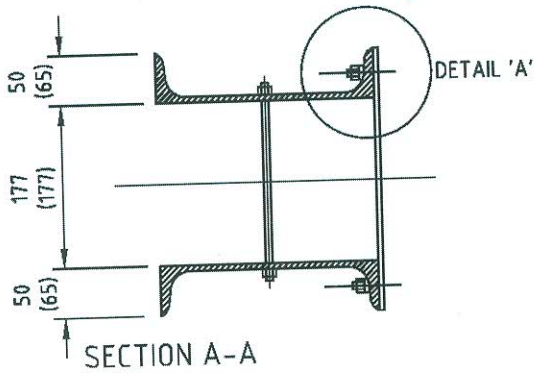

SECTION A-A

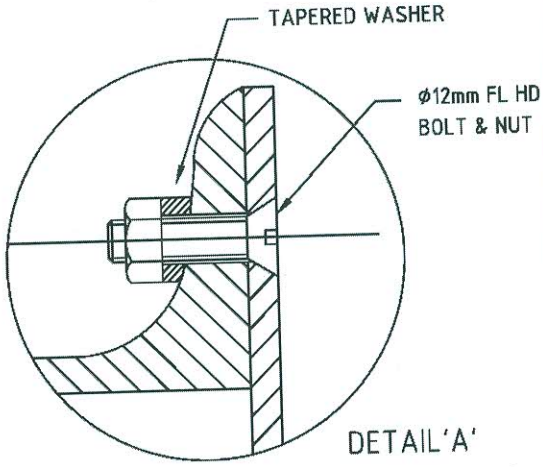

DETAIL'A'

NOTES

1. DIMENSIONS AS SHOWN ARE IN mm.
2. DRAWING IS NOT TO SCALE.
3. 400 mm hole centre to centre length for 25 kVA and below
   500 mm hole centre to centre length for 63 kVA and above

BHUTAN POWER CORPORATION LIMITED	ENGINEERING DESIGN & CONTRACTS DEPARTMENT	
	DISTRIBUTION DESIGN & CONSTRUCTION STANDARD 33 & 11 kV TRANSFORMER PLATFORM FOR STEEL TUBULAR POLE	
	DRAWING NO. BPC-DDCS-2015-37/2	REVISION 2015

DESIGNATION	NAME	DATE
DRAFTSMAN		
DESIGNER		
DESIGN CHECK		
PROJECT MANAGER		
PROJECT DIRECTOR		

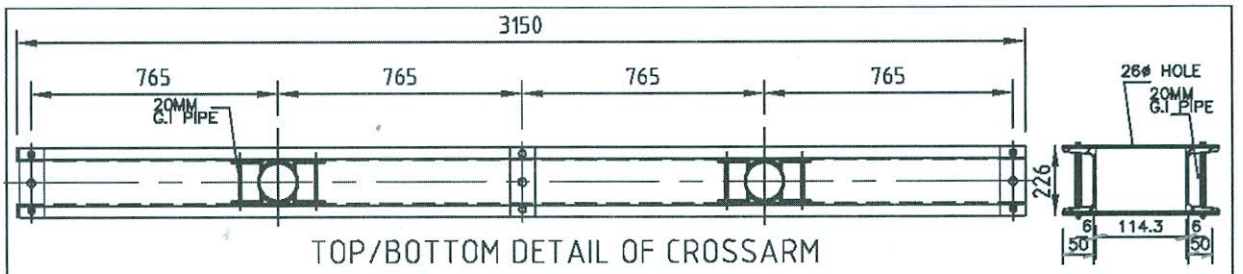

TOP/BOTTOM DETAIL OF CROSSARM

ISMC 100x50 (2NOS)

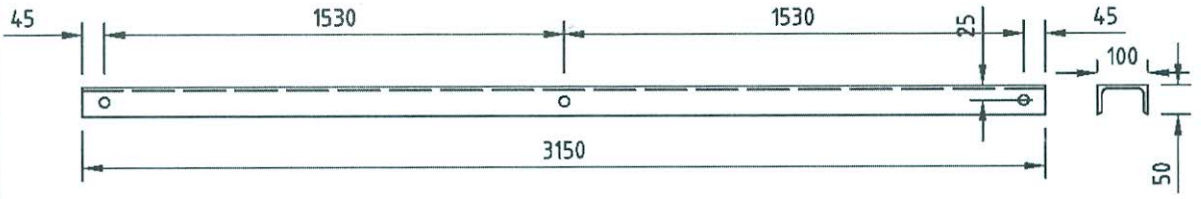

TOP VIEW OF CROSSARM - CHL

ISMC 100x50 (2 NOS)

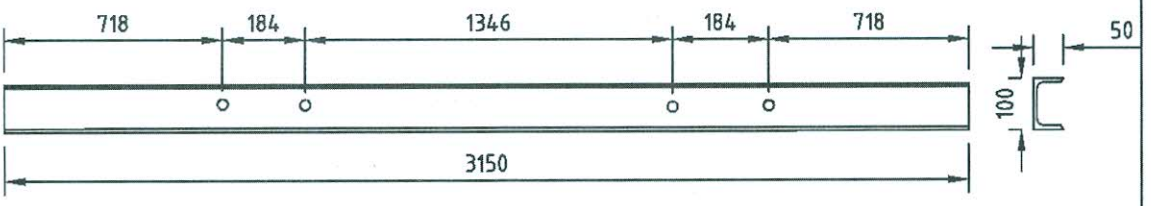

FRONT VIEW OF CROSSARM - CHL

ISMC 100x50 (2 NOS)

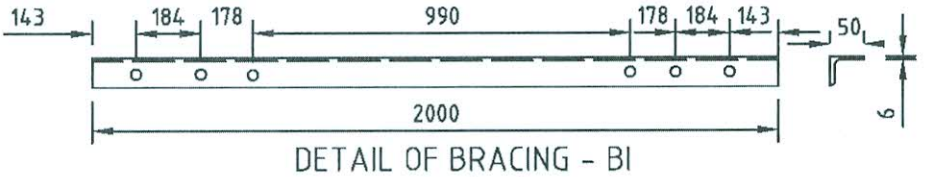

DETAIL OF BRACING - BI

ISA 50x50x6 (1 NO)

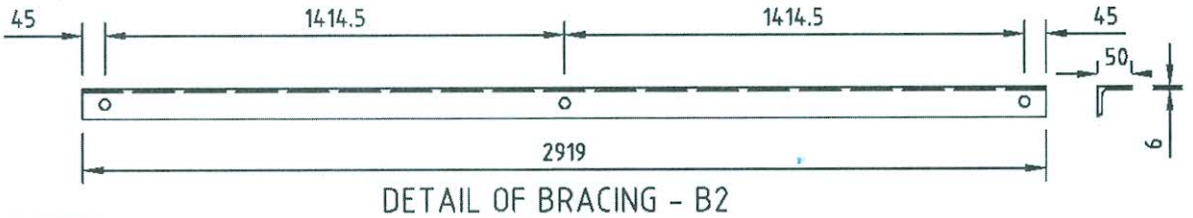

DETAIL OF BRACING - B2

ISA 50x50x6 (2 NOS)

NOTES

1. DIMENSIONS AS SHOWN ARE IN mm.
2. DRAWING IS NOT TO SCALE.
3. ALL BOLT HOLES TO BE 18MM EXCEPT FOR THE ONE INDICATED.

BHUTAN POWER CORPORATION LIMITED			ENGINEERING DESIGN & CONTRACTS DEPARTMENT
			DISTRIBUTION DESIGN & CONSTRUCTION STANDARD 11 & 33 KV H-FRAME CHANNEL & BRACING DETAIL (STEEL TUBULAR POLES)
DESIGNATION	NAME	DATE	
DRAFTSMAN			
DESIGNER			
DESIGN CHECK			
PROJECT MANAGER			DRAWING NO. BPC-DDCS-2015-32/2 — REVISION 2015
PROJECT DIRECTOR			

DETAIL OF BRACING - B3

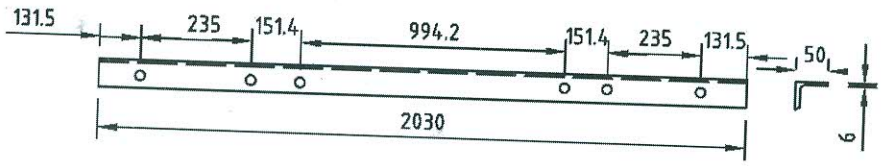

ISA 50x50x6 (1 NO)

DETAIL OF MS STRING LACING FLAT

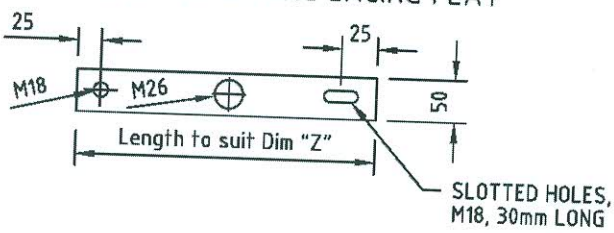

FL 50x6 (6 NOS)
GI 16MM DIA NUTS AND BOLTS (6NOS)

FIXING OF PIN AND DISC INSULATOR ON CROSSARM

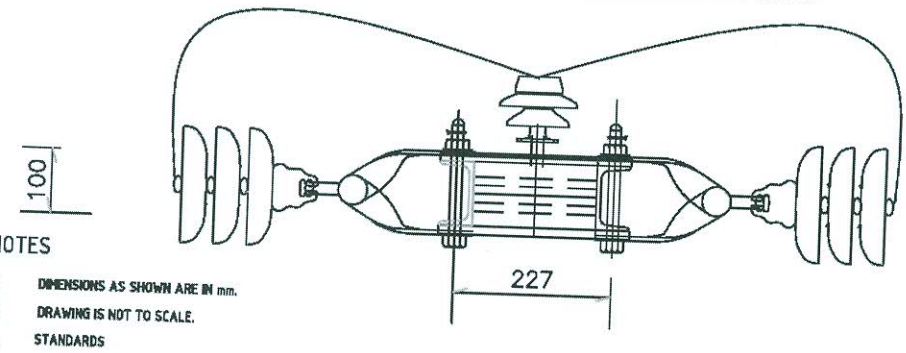

NOTES

1. DIMENSIONS AS SHOWN ARE IN mm.
2. DRAWING IS NOT TO SCALE.
3. STANDARDS
   IS 2062-1992/IS 1161 OR EQUIVALENT STEEL FOR GENERAL STRUCTURAL PURPOSES
   IS 808-1964: OR EQUIVALENT DIMENSIONS FOR HOT ROLLED STEEL BEAM COLUMN CHANNEL AND ANGLE SECTION
4. MINIMUM TENSILE STRENGTH - 420 MPA
5. ALL ITEMS SHALL BE MILD STEEL (MS) PAINTED WITH ONE COAT OF RED OXIDE PRIMER IN ACCORDANCE WITH ISO 12944-7 OR ANY OTHER EQUIVALENT INTERNATIONAL STANDARD. HOWEVER, NUTS AND BOLTS SHALL BE HOT DIPPED GALVANISED WITH ZINC COATING 600 GRAM PER SQUARE METER.
6. DISC ARRANGEMENT IS SHOWN FOR 33kV SYSTEM, TAKE ONE DISC INSULATOR FOR 11kV SYSTEM

BHUTAN POWER CORPORATION LIMITED

ENGINEERING DESIGN & CONTRACTS DEPARTMENT

DISTRIBUTION DESIGN & CONSTRUCTION STANDARD

11 & 33 KV H-FRAME

CHANNEL & BRACING DETAIL (STEEL TUBULAR POLES)

DESIGNATION	NAME	DATE
DRAFTSMAN		
DESIGNER		
DESIGN CHECK		
PROJECT MANAGER		
PROJECT DIRECTOR		

DRAWING NO. BPC-DDCS-2015-32/3

REVISION 2015

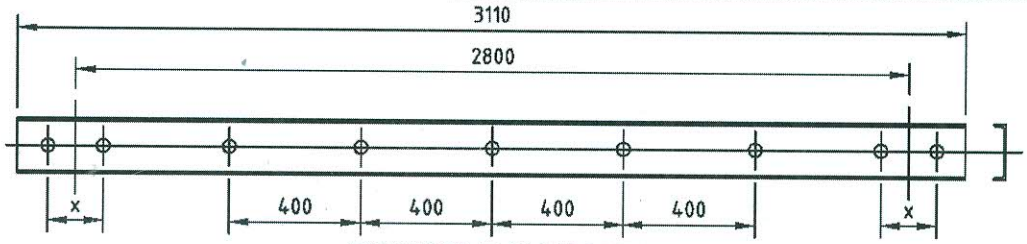

"x" TO SUIT OD OF POLE,

EQUIPMENT SUPPORTS,
CH 75x40 (3NOS)

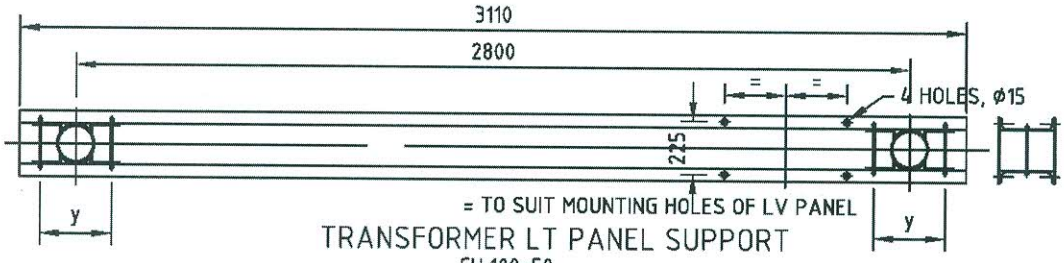

= TO SUIT MOUNTING HOLES OF LV PANEL

TRANSFORMER LT PANEL SUPPORT
CH 100x50

"y "TO SUIT NOM 165 OD OF POLE,

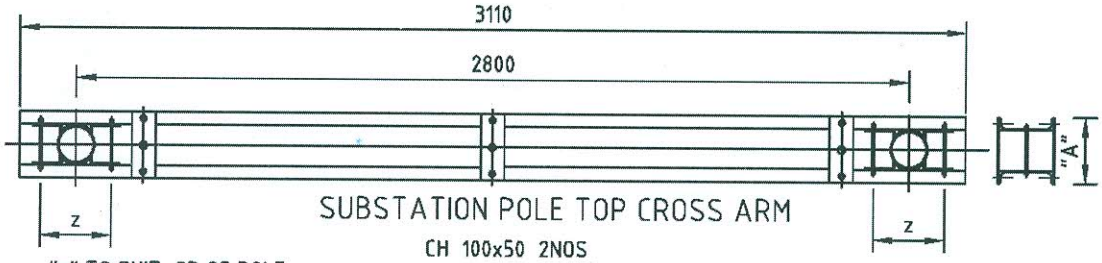

SUBSTATION POLE TOP CROSS ARM
CH 100x50 2NOS

"z" TO SUIT OD OF POLE

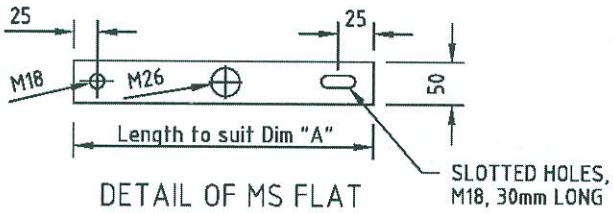

DETAIL OF MS FLAT
FL 50x6 (6 NOS)
GI 16MM DIA NUTS AND BOLTS (6NOS)

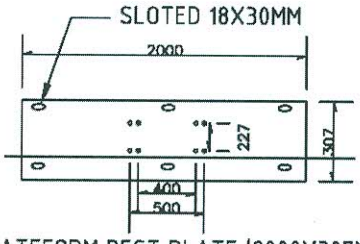

PLATEFORM REST PLATE (2000X307X5)

NOTES

1. DIMENSIONS AS SHOWN ARE IN mm.
2. DRAWING IS NOT TO SCALE.
3. TRANSFORMER LT PANEL SUPPORT REQUIRE ONLY FOR 125kVA TRANSFORMERS
4. GENERAL ARRANGEMENT OF SUBSTATION BE REFERRED FROM DRAWING NO. BPC-DDCS-(9 TO 11)

BHUTAN POWER CORPORATION LIMITED			ENGINEERING DESIGN & CONTRACTS DEPARTMENT
			DISTRIBUTION DESIGN & CONSTRUCTION STANDARD
DESIGNATION	NAME	DATE	POLE MOUNTED SUBSTATIONSTRUCTURE DETAILS FOR STEEL TUBULAR POLE
DRAFTSMAN			
DESIGNER			
DESIGN CHECK			DRAWING NO. BPC-DDCS-2015-37/1 — REVISION 2015
PROJECT MANAGER			
PROJECT DIRECTOR			

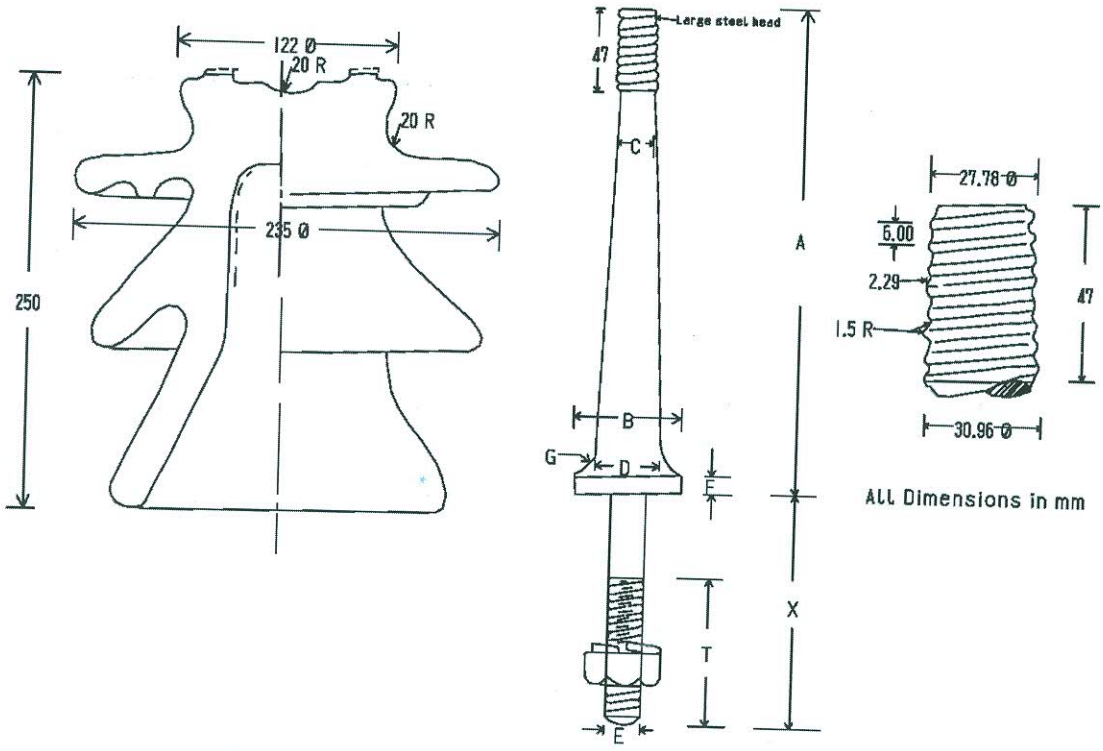

Specification no. IS 2486 (Part II) 1974
Min. Failing Load.....1080 kg

A mm	B mm	C mm	D mm	E mm	F mm	G mm	T mm	X mm
300	67	27	44	24	6	12	100	150

Large Steel Head Pin for 33kV Pin Insulator

TECHNICAL DETAILS:
(a) Highest System Voltage ..... 36kV (rms)
(b) Wet Power Frequency withstand Test ..... 75kV (rms)
(c) Power Frequency Puncture withstand Test ..... 180kV (rms)
(d) Impulse Voltage withstand Test ..... 170kV (peak)
(e) Minimum Failing Load ..... 1080 kg

BHUTAN POWER CORPORATION LIMITED

ENGINEERING DESIGN & CONTRACTS DEPARTMENT

DISTRIBUTION DESIGN & CONSTRUCTION STANDARD

33KV-10.8 kN PIN INSULATOR-LARGE HEAD

DESIGNATION	NAME	DATE
DRAFTSMAN		
DESIGNER		
DESIGN CHECK		
PROJECT MANAGER		
PROJECT DIRECTOR		

DRAWING NO. BPC-DDCS-2015-43/1

REVISION 2015

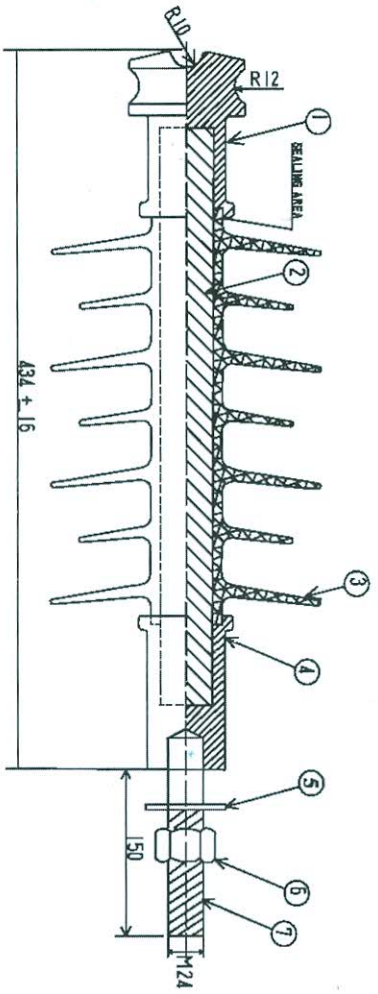

Sl.no	Description
1	Top Metal Fitting
2	Core Rod
3	Polymer Housing
4	Bottom Metal Fitting
5	Plain Washer
6	Nut
7	Stud

Guaranteed Technical Parameters

1. Min. Creepage Distance : 900 mm
2. Arcing Distance (Approximate) : 320 mm
3. Cantilever Failure Load : 10 kN
4. Nominal System Voltage : 33 kV
5. Highest System Voltage : 36 kV
6. System Frequency : 50 Hz
7. 1 Min. Power Freq. Wtihstand Voltage (Wet) : 75 kV (rms)
8. Dry Lightning Impulse Withstand Voltage : 170 kVp

BHUTAN POWER CORPORATION LIMITED

ENGINEERING DESIGN & CONTRACTS DEPARTMENT

DISTRIBUTION DESIGN & CONSTRUCTION STANDARD

33KV&11KV-10 kN COMPOSITE SILICONE RUBBER PIN INSULATOR

DESIGNATION	NAME	DATE
DRAFTSMAN		
DESIGNER		
DESIGN CHECK		
PROJECT MANAGER		
PROJECT DIRECTOR		

DRAWING NO. BPC-DDCS-2015-44

REVISION 2015

Porcelain Disc Insulator

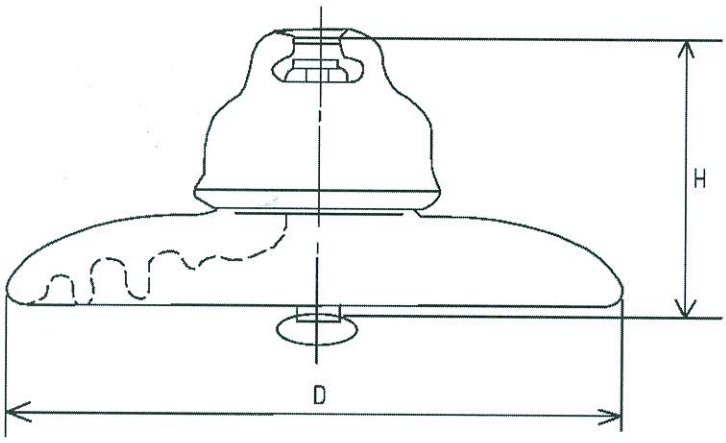

Item	Dimensions (mm)		Rate Failure Load (kN)	Weight (kg)
	D	H		
11kV	255	146	70	5.2
33kV	255	146	70	5.2x3

33 kV&11 kV-70 kN COMPOSITE SILICONE RUBBER LONG ROD INSULATOR

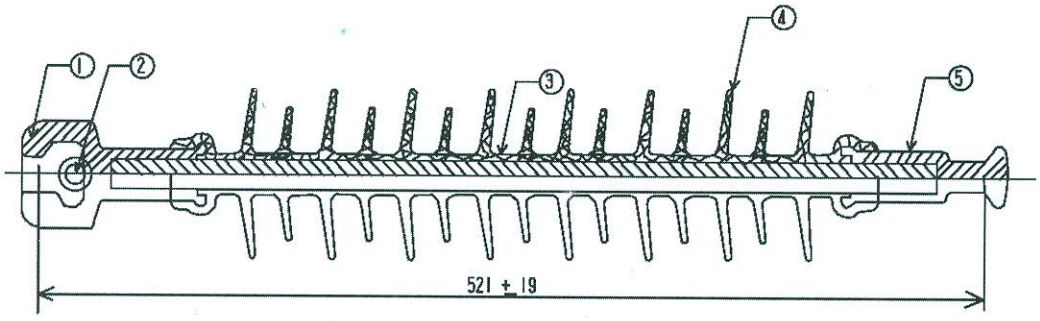

Sl.no	Description
1	Socket Fitting
2	Security clip (R)
3	Core Rod
4	Polymer Housing
5	Ball fitting

BHUTAN POWER CORPORATION LIMITED

ENGINEERING DESIGN & CONTRACTS DEPARTMENT

DISTRIBUTION DESIGN & CONSTRUCTION STANDARD

PORCELAIN AND COMPOSITE SILICON RUBBER DISC INSULATOR

DESIGNATION	NAME	DATE
DRAFTSMAN		
DESIGNER		
DESIGN CHECK		
PROJECT MANAGER		
PROJECT DIRECTOR		

DRAWING NO. BPC-DDCS-2015-45

REVISION 2015

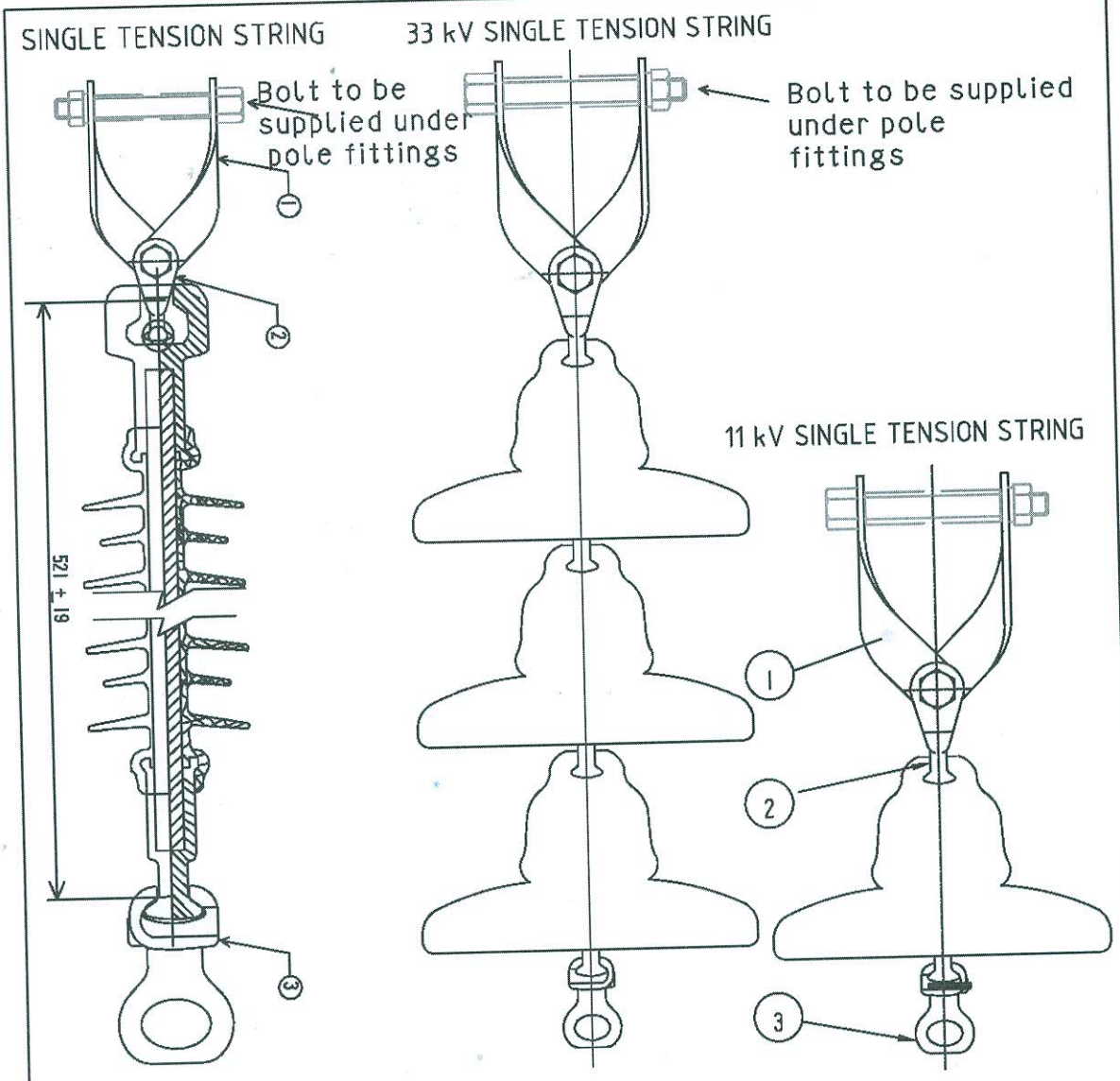

Notes:
1. All fittings shall be galvanised according to relevant standard

ITEM	NAME OF ITEM	QTY	MATERIAL
3	SOCKET THIMBLE	1	ALUMINIUM ALLOY
2	BALL EYE	1	FORGED STEEL
1	CROSSARM STRAP (TOGETHER, NOT SEPARATE)	1	GALVANISED IRON

BHUTAN POWER CORPORATION LIMITED

ENGINEERING DESIGN & CONTRACTS DEPARTMENT

DISTRIBUTION DESIGN & CONSTRUCTION STANDARD

ASSEMBLY FOR DISC INSULATOR ARRANGEMENT

DESIGNATION	NAME	DATE
DRAFTSMAN		
DESIGNER		
DESIGN CHECK		
PROJECT MANAGER		
PROJECT DIRECTOR		

DRAWING NO. BPC-DDCS-2015-46

REVISION 2015

CROSS ARM STRAP

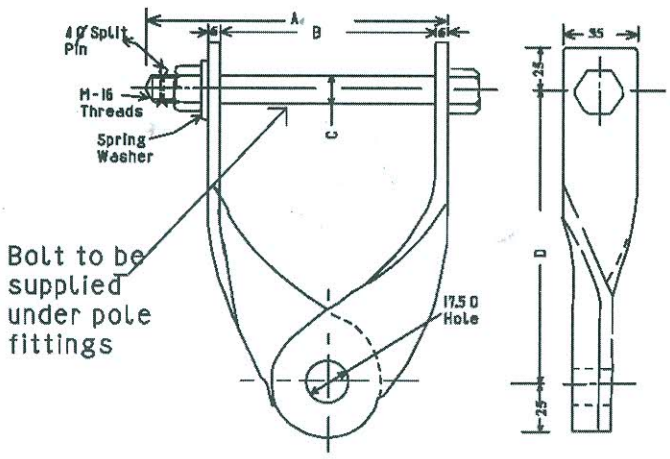

Dimensions (mm)				Rate Failure Load	Weight
A	B	C	D	(kN)	(kg)
145	100	16	140	70	-

Ball Eye

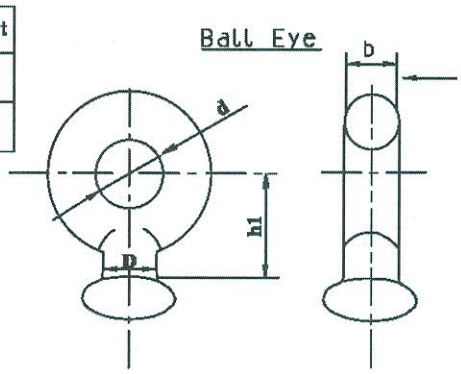

Dimensions (mm)				Rate Failure Load	Weight
D	h1	b	d	(kN)	(kg)
17	50	16	18	70	-

Socket Thimble

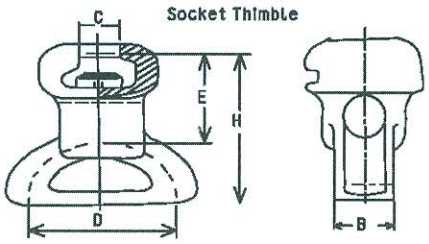

Dimensions (mm)					Rate Failure Load	Weight
B	C	D	E	H	(kN)	(kg)
32	17.6	60	60	95	70	1.20

Notes:

1. All fittings shall be galvanised according to relevant standard

BHUTAN POWER CORPORATION LIMITED	ENGINEERING DESIGN & CONTRACTS DEPARTMENT	
	DISTRIBUTION DESIGN & CONSTRUCTION STANDARD	
	HARDWARE FITTINGS FOR DISC INSULATOR ARRANGEMENT	
	DRAWING NO. BPC-DDCS-2015-47	REVISION 2015

DESIGNATION	NAME	DATE
DRAFTSMAN		
DESIGNER		
DESIGN CHECK		
PROJECT MANAGER		
PROJECT DIRECTOR		

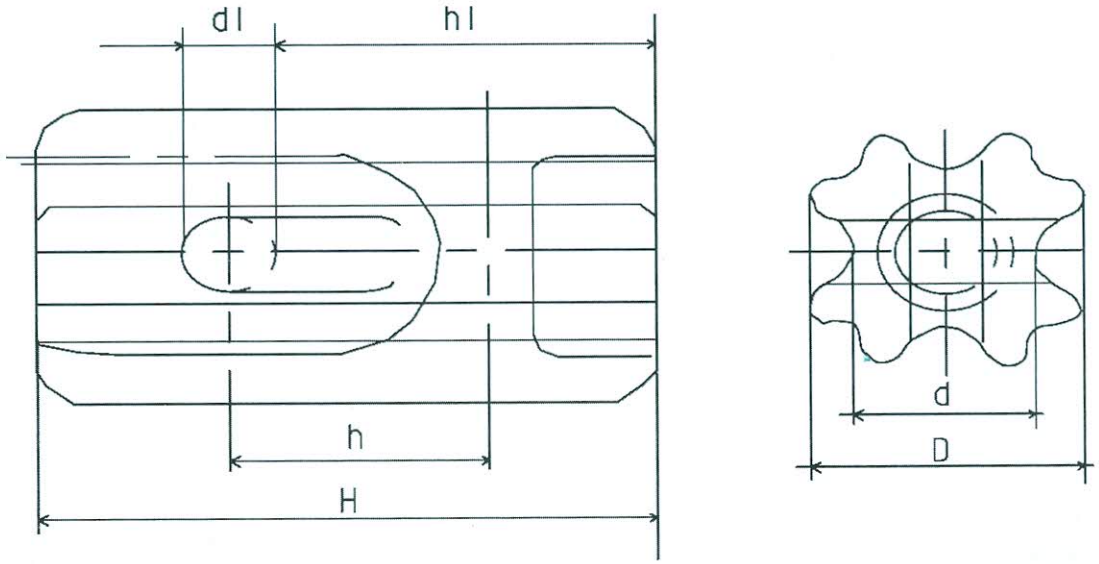

Item	Dimensions (mm)						Rated Failure Load(KN)	Weight (kg)
	H	h	D	d	hl	dl		
11&33KV	171	67	89	60.3	114.3	25.4	89	1.95

BHUTAN POWER CORPORATION LIMITED			ENGINEERING DESIGN & CONTRACTS DEPARTMENT
TITLE	NAME	DATE	DISTRIBUTION DESIGN & CONSTRUCTION STANDARD HT STAY INSULATOR
DESIGNED BY			
CHECKED BY			DRAWING NO. BPC-DDCS-2015-48 — REVISION 2015
APPROVED BY			

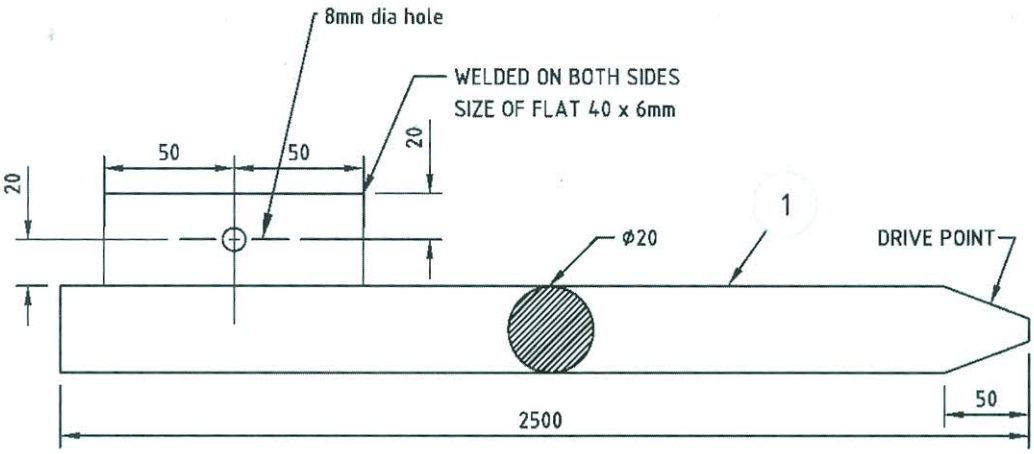

EARTHING ROD

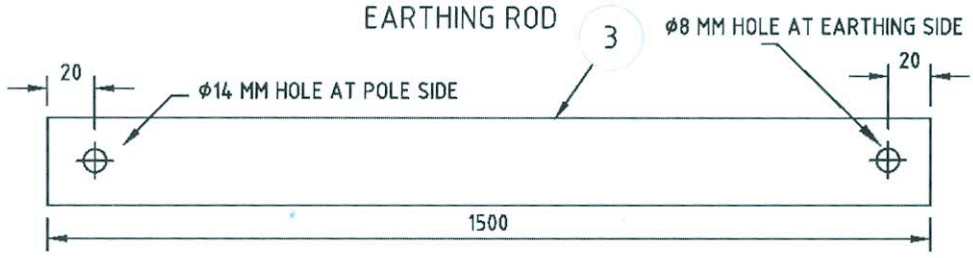

EARTHING FLAT 25X6 MM

GRADE OF STEEL: BS 4360 GRADE 43A OR EQUIVALENT
GALVANISED TO: BS 729 OR EQUIVALENT
PACKING: EARTING RODS, NUTS & BOLTS, FLATS TO BE PACKED SEPARATELY

ITEM	NAME OF ITEM	QTY	MATERIAL	SIZE
5	WASHER SPRING	4	HDG STEEL	M6
4	NUT HEX	4	HDG STEEL	M6
3	EARTHING FLAT 25X6MM	1	HDG STEEL	1.5Meter
2	BOLT HEX	4	HDG STEEL	M6 x 25 x FT
1	EARTHING ROD	1	HDG STEEL	M20 x 2500

BHUTAN POWER CORPORATION LIMITED		ENGINEERING DESIGN & CONTRACTS DEPARTMENT	
TITLE	NAME	DATE	DISTRUBUTION DESIGN & CONSTRUCTION STANDARD SPIKE EARTHING SET
DRAFTSPERSON			
DESIGNER			
PROJECT MANAGER			DRAWING NO.BPC-DDCS-2015-49
HEAD OF DEPARTMENT			REVISION 2015

ANCHOR ROD ASSEMBLY

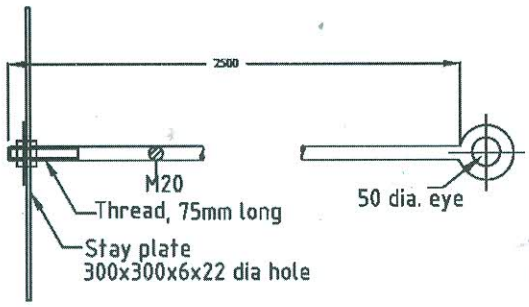

TURN-BUCKLE ASSEMBLY

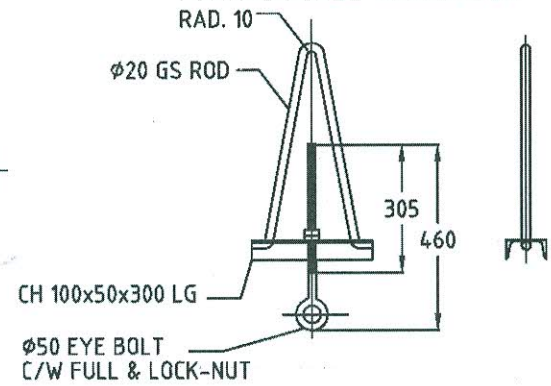

STAY PLATE

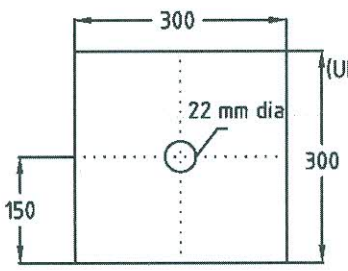

EYE BOLT

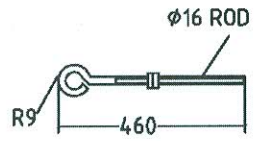

V HANGER

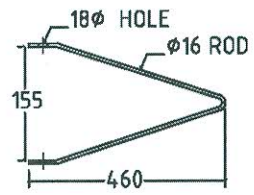

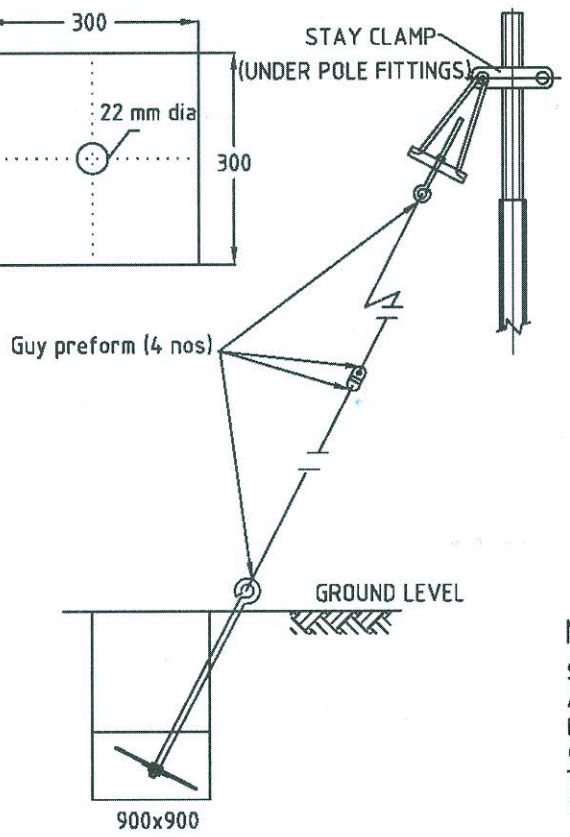

STAY WIRE ASSEMBLY

NOTES

Stay rod and nuts assembled and packed together
Anchor plates packed separately
Material :- BS 4360 Grade 43A
Galvanizing :- BS 729
Threads :- ISO Metric
Nut :- BS 4190 Grade 4.0

NAME OF THE ITEM	QTY	MATERIAL
V-HANGER ONLY FOR TELESCOPIC POLE	1	H.D.G STEEL
STAY WIRE (7/8 SWG) (IN METERS)	8M+POLE HEIGHT	H.D.G STEEL
STAY CLAMP WITH NUTS AND BOLTS	1	H.D.G STEEL
STAY ROD (2.5 M) WITH THIMBLE	1	H.D.G STEEL
ANCHOR PLATE (300 X 300 X 6MM)	1	H.D.G STEEL
TURN BUCKLE ASSEMBLEY WITH THIMBLE	1	H.D.G STEEL
GUY PREFORMED SUITABLE FOR 7/8 SWG	4	GALVANISED STEEL WIRE
STAY INSULATOR	1	PORCELAIN

BHUTAN POWER CORPORATION LIMITED

ENGINEERING DESIGN & CONTRACTS DEPARTMENT

DISTRIBUTION DESIGN & CONSTRUCTION STANDARD

STAY SET ASSEMBLY

DESIGNATION	NAME	DATE
DRAFTSMAN		
DESIGNER		
DESIGN CHECK		
PROJECT MANAGER		
PROJECT DIRECTOR		

DRAWIING NO. BPC-DDCS-2015-51

REVISION 2015

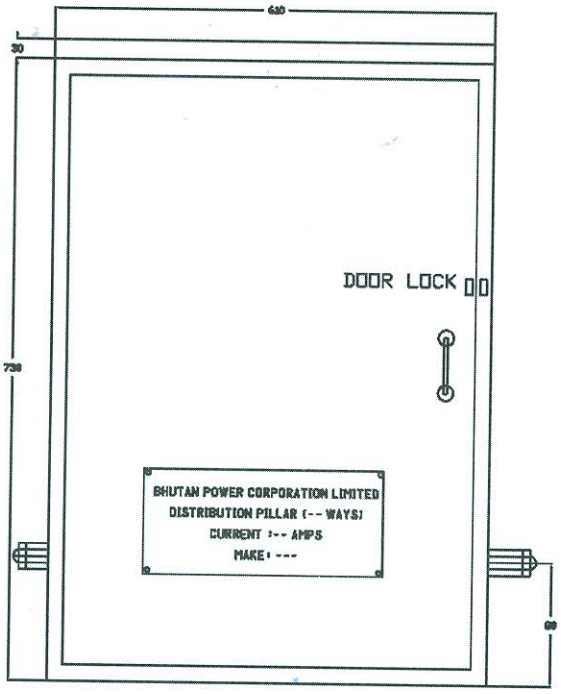

FRONT VIEW

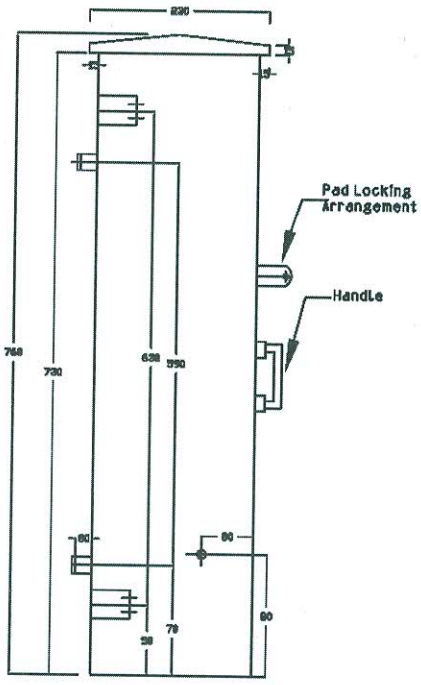

SIDE VIEW

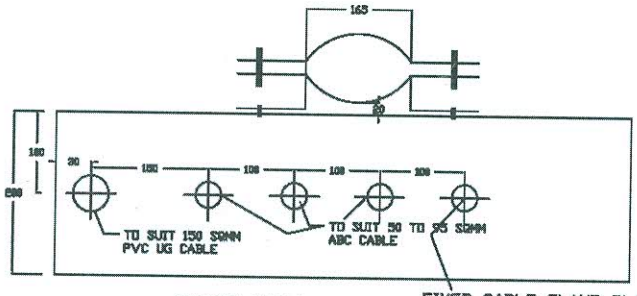

BOTTOM VIEW

FIXED CABLE GLAND PLATE WITH PUNCHED HOLES FOR CABLE ENTRY (OUTGOING 4 NOS) AND (INCOMING 1NO)

NOTE:

BUSBAR SIZE 25x10MM AL/ 20x3MM CU
NEUTRAL BUSBAR 25x5MM AL / 20x3MM CU
BAYONET LAMP (IND) TO BE PROVIDED

BHUTAN POWER CORPORATION LIMITED			ENGINEERING DESIGN & CONTRACTS DEPARTMENT
			TITLE : DISTRIBUTION DESIGN & CONSTRUCTION STANDARD THREE PHASE TRANSFORMER LT PANEL, 4 WAYS, INCOMER MCCB-UPTO 250A, OUTGOING HRC FUSE UPTO 125A (EXTERNAL VIEW)
DESIGNATION	NAME	DATE	
DRAFTSMAN			
DESIGNER			
DESIGN CHECK			DRAWING NO. BPC-DDCS-2015-54/2
PROJECT MANAGER			REVISION 2015
PROJECT DIRECTOR			

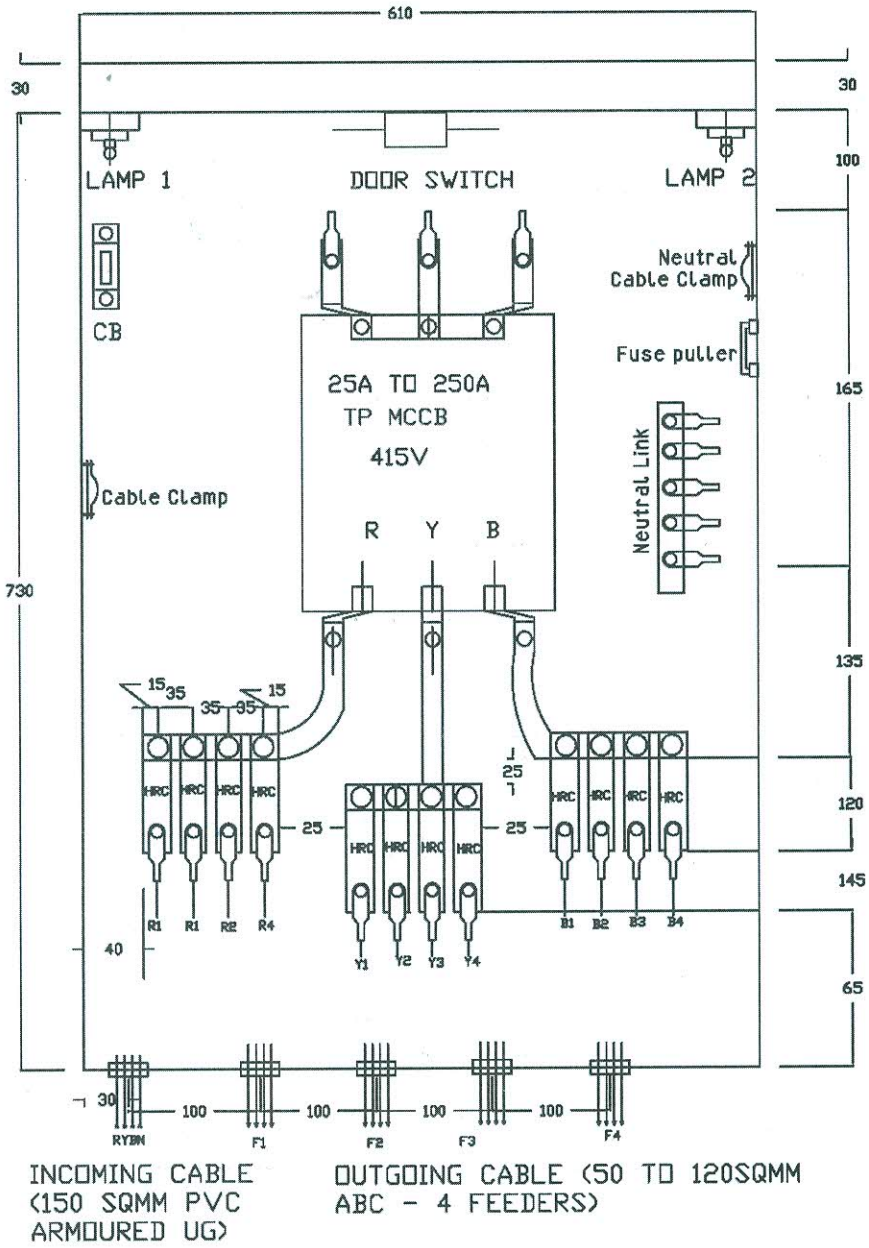

INCOMING CABLE (150 SQMM PVC ARMOURED UG)

OUTGOING CABLE (50 TO 120SQMM ABC - 4 FEEDERS)

NOTES

INTERNAL WIRING DIAGRAM OF DISTRIBUTION PILLAR

INNER DEVICE:
MCCB UPTO 250A, 1NO. TPN-415V
HRC FUSES: UPTO 125A, 6 NOS/12NOS DEPENDING ON NUMBER OF WAYS
Provide one number of HRC fuse puller for every board.
TO BE USED WITH 16KVA, 25KVA, 63 kVA and 125 kVA 3PHASE TRANSFORMER RATINGS
CABLE LUG TO BE SUPPLIED FIXED WITH THE BOARD FOR APPROPRIATE CABLE SIZES.

BHUTAN POWER CORPORATION LIMITED			ENGINEERING DESIGN & CONTRACTS DEPARTMENT
			TITLE : DISTRIBUTION DESIGN & CONSTRUCTION STANDARD THREE PHASE TRANSFORMER LT PANEL, 4 WAYS, INCOMER MCCB-UPTO 250A, OUTGOING HRC FUSE UPTO 125A(INTERNAL VIEW)
DESIGNATION	NAME	DATE	
DRAFTSMAN			
DESIGNER			
DESIGN CHECK			
PROJECT MANAGER			DRAWING NO. BPC-DDCS-2015-5A/1 — REVISION 2015
PROJECT DIRECTOR			

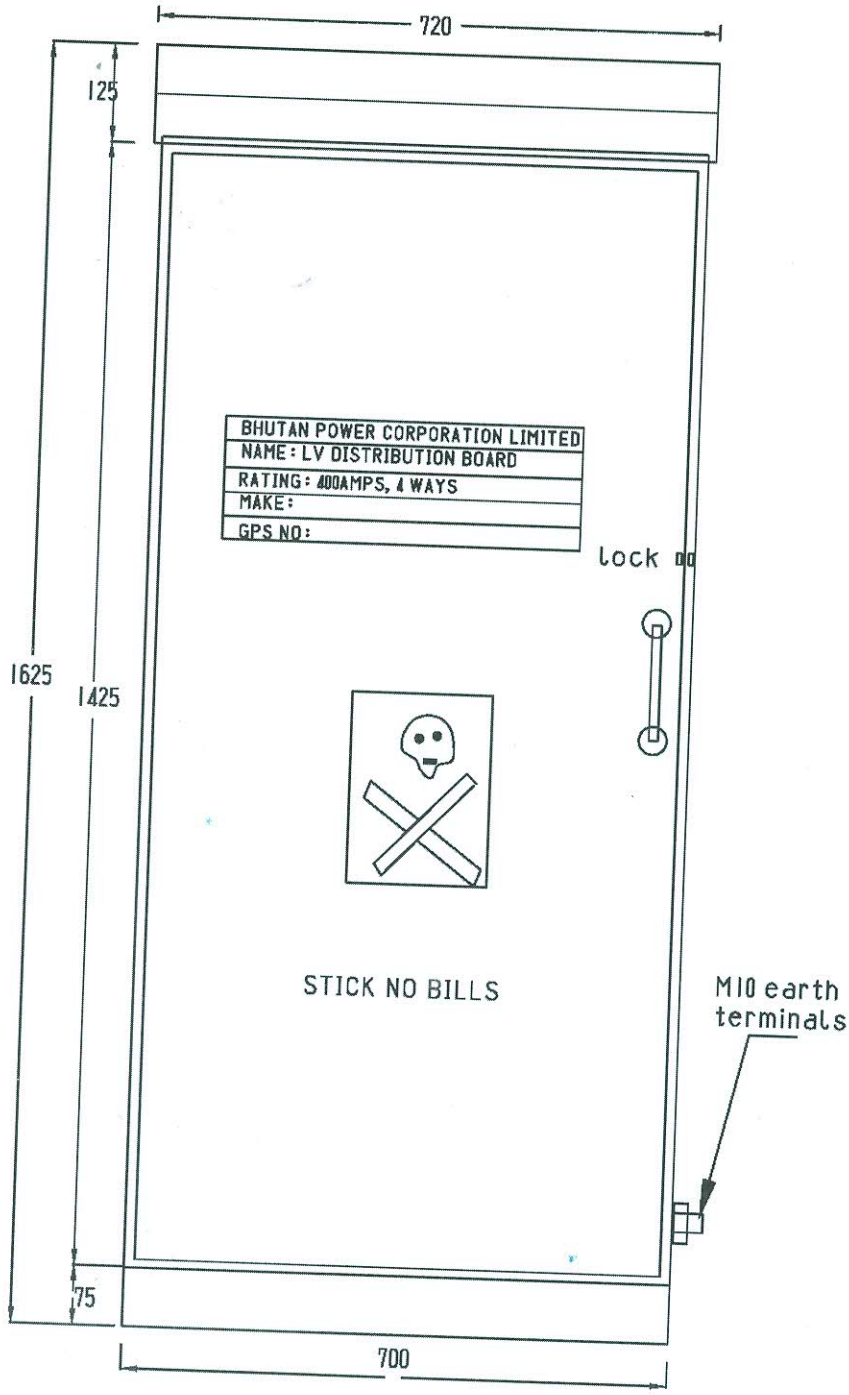

NOTES

1. DIMENSIONS AS SHOWN ARE IN MM.
2. DRAWING NOT TO SCALE.

BHUTAN POWER CORPORATION LIMITED	ENGINEERING DESIGN & CONTRACTS DEPARTMENT	
	TITLE : DISTRIBUTION DESIGN & CONSTRUCTION STANDARD 4WAYS TRANSFORMER DISTRIBUTION PILLAR (FRONT ELEVATION)	
	DRAWING NO. BPC-DDCS-2015-56/1	REVISION 2015

DESIGNATION	NAME	DATE
DRAFTSMAN		
DESIGNER		
DESIGN CHECK		
PROJECT MANAGER		
PROJECT DIRECTOR		

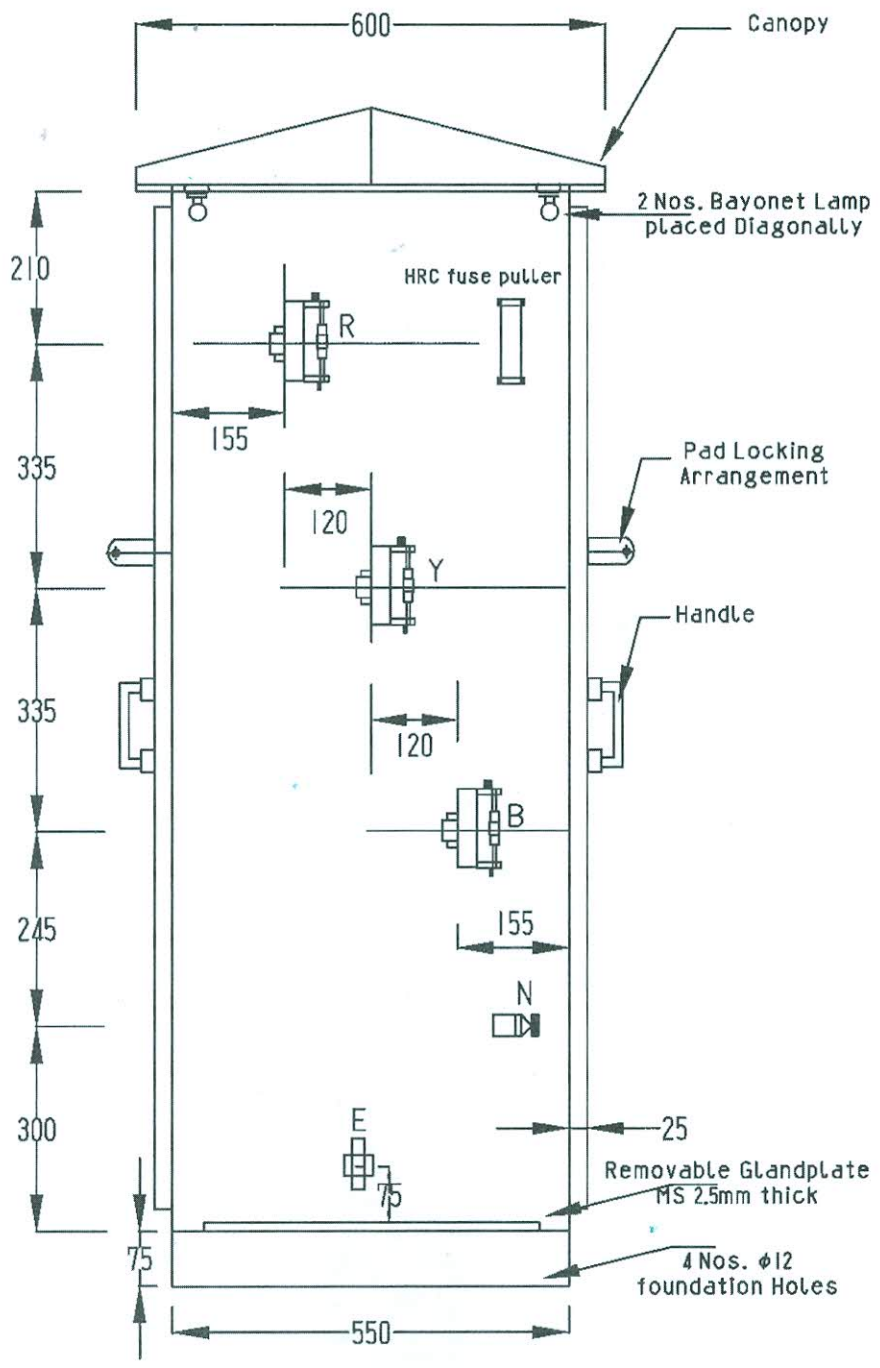

NOTES

1. DIMENSIONS AS SHOWN ARE IN MM. THE PILLAR SHALL BE TWO SIDED DOORS
2. DRAWING NOT TO SCALE.

BHUTAN POWER CORPORATION LIMITED			ENGINEERING DESIGN & CONTRACTS DEPARTMENT
			TITLE : DISTRIBUTION DESIGN & CONSTRUCTION STANDARD 4WAYS TRANSFORMER DISTRIBUTION PILLAR (SIDE ELEVATION)
DESIGNATION	NAME	DATE	
DRAFTSMAN			
DESIGNER			
DESIGN CHECK			DRAWING NO. BPC-DDCS-2015-56/2
PROJECT MANAGER			REVISION 2015
PROJECT DIRECTOR			

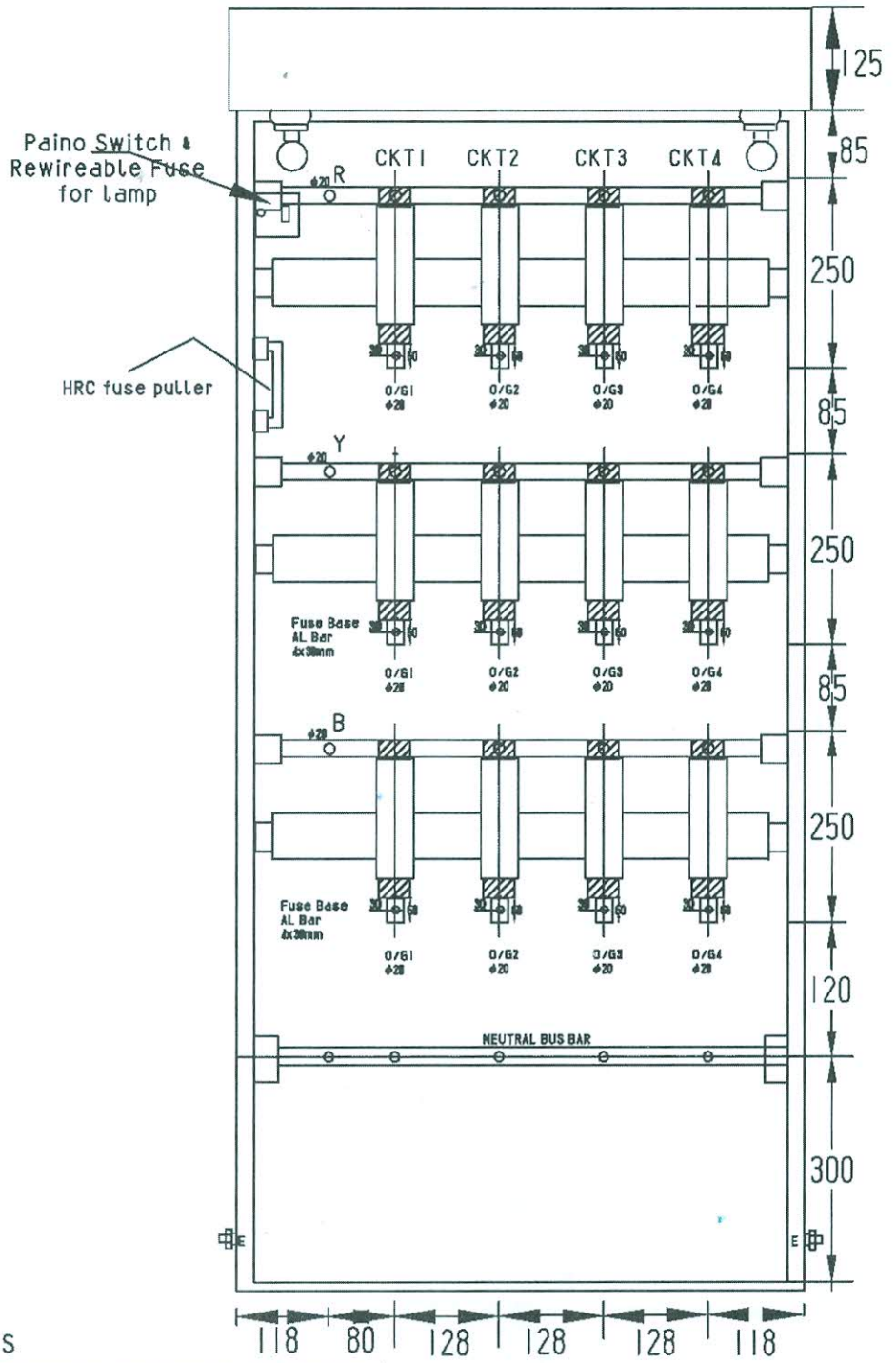

NOTES

1. DIMENSIONS AS SHOWN ARE IN MM.
2. PROVIDE ONE NO. OF FUSE PULLER FOR EVERY DISTRIBUTION BOARD.

BHUTAN POWER CORPORATION LIMITED			ENGINEERING DESIGN & CONTRACTS DEPARTMENT
			TITLE : DISTRIBUTION DESIGN & CONSTRUCTION STANDARD 4WAYS TRANSFORMER DISTRIBUTION PILLAR (FRONT ELEVATION WITHOUT DOOR)
DESIGNATION	NAME	DATE	
DRAFTSMAN			
DESIGNER			
DESIGN CHECK			DRAWING NO. BPC-DDCS-2015-56/3
PROJECT MANAGER			REVISION 2015
PROJECT DIRECTOR			

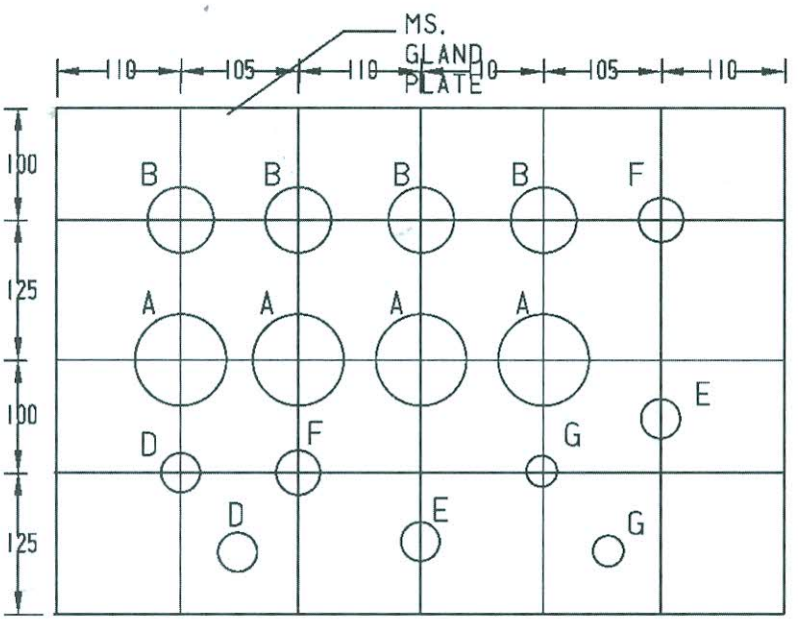

MS. GLAND PLATE	HOLE SIZE
A-4CX400SQ.MM-KNOCKOUT	3-1/8"
B-4CX300SQ.MM-KNOCKOUT	2-3/4"
C-2CX16SQ.MM	1"
D-4CX50SQ.MM-KNOCKOUT	1-1/2"
E-4CX150SQ.MM-KNOCKOUT	2"
F-4CX240SQ.MM-KNOCKOUT	2-1/2"
G-4CX95SQ.MM-KNOCKOUT	1-3/4"
h-2CX6SQ.MM	3/4"
I-2CX10SQ.MM	1"

NOTES

1. DIMENSIONS AS SHOWN ARE IN MM.
2. DRAWING NOT TO SCALE.
3. CORRECT CABLE GLAND SIZE TO BE USED ACCORDINGLY WITH CABLE SIZE

BHUTAN POWER CORPORATION LIMITED

ENGINEERING DESIGN & CONTRACTS DEPARTMENT

TITLE : DISTRIBUTION DESIGN & CONSTRUCTION STANDARD

4WAYS TRANSFORMER DISTRIBUTION PILLAR
(GLAND PLATE DETAILS)

DESIGNATION	NAME	DATE
DRAFTSMAN		
DESIGNER		
DESIGN CHECK		
PROJECT MANAGER		
PROJECT DIRECTOR		

DRAWING NO. BPC-DDCS-2015-56/4

REVISION
2015

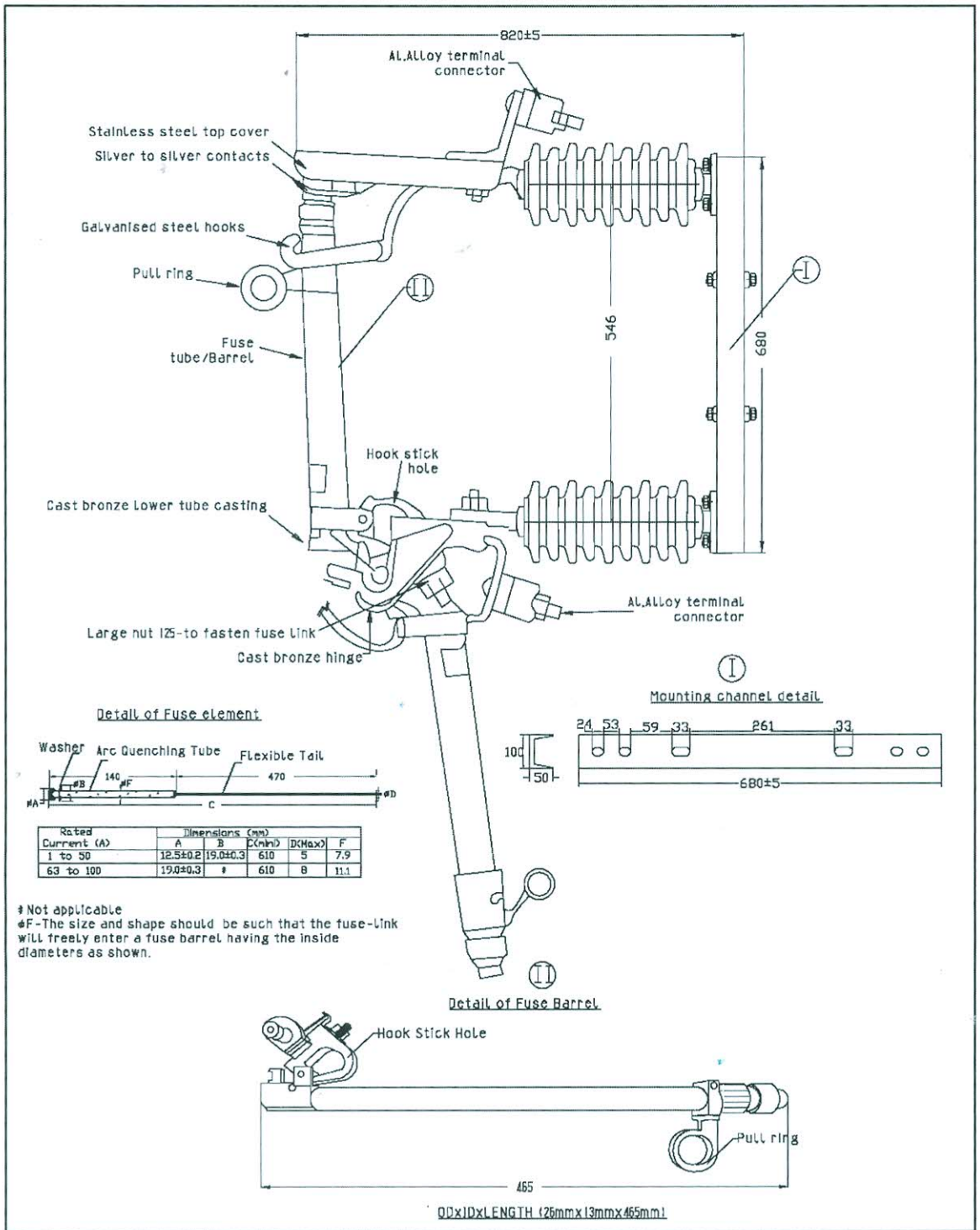

Rated Current (A)	Dimensions (mm) A	B	C(min)	D(Max)	F
1 to 50	12.5±0.2	19.0±0.3	610	5	7.9
63 to 100	19.0±0.3	#	610	8	11.1

Not applicable
ØF-The size and shape should be such that the fuse-link will freely enter a fuse barrel having the inside diameters as shown.

ODxIDxLENGTH (26mmx13mmx465mm)

BHUTAN POWER CORPORATION LIMITED		ENGINEERING DESIGN & CONTRACTS DEPARTMENT	
		TITLE : DISTRIBUTION DESIGN & CONSTRUCTION STANDARD	
DESIGNATION	NAME	DATE	Details of 11 kV and 33 kV Fuse Cut-out
DRAFTSMAN			
DESIGNER			
DESIGN CHECK			DRAWING NO. BPC-DDCS-2015-58 / REVISION 2015
PROJECT MANAGER			
PROJECT DIRECTOR			

ANCHOR ROD ASSEMBLY

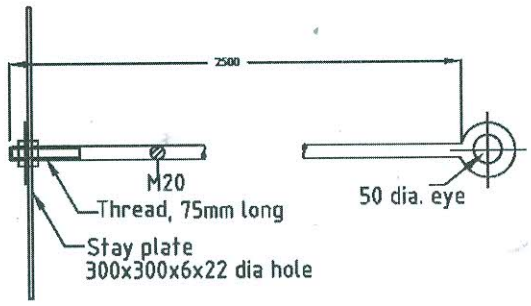

TURN-BUCKLE ASSEMBLY

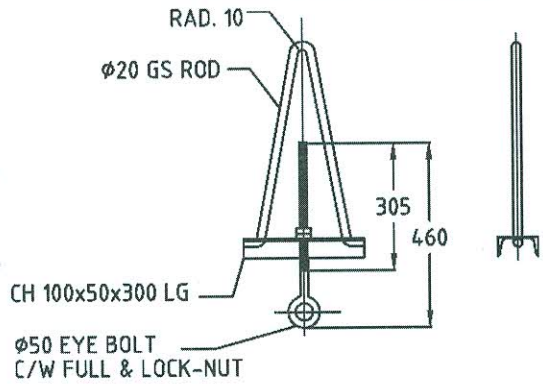

STAY PLATE

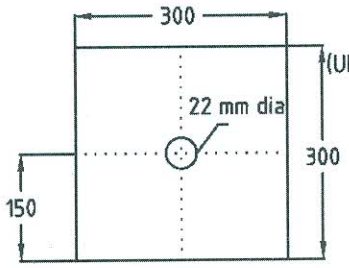

EYE BOLT

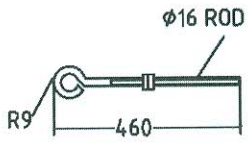

V HANGER

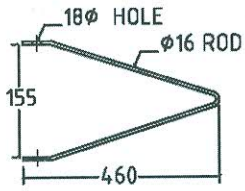

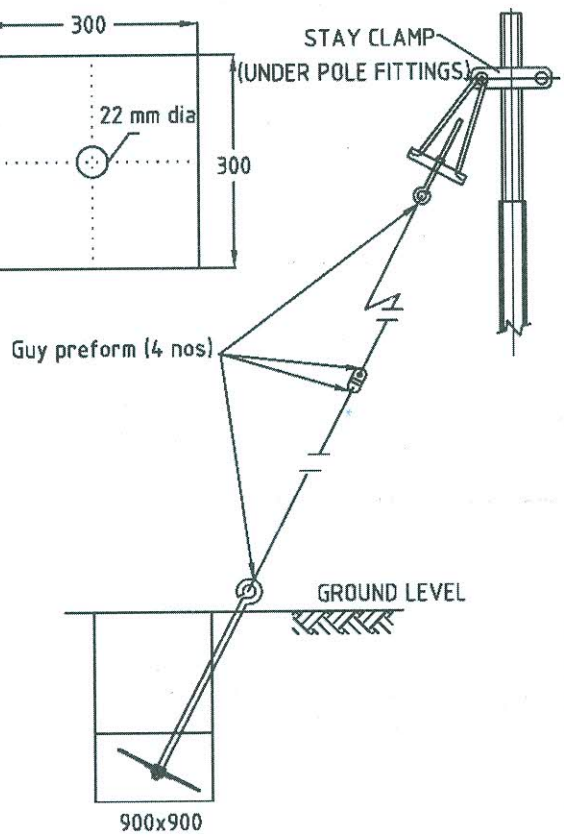

STAY WIRE ASSEMBLY

NOTES

Stay rod and nuts assembled and packed together
Anchor plates packed separately
Material :- BS 4360 Grade 43A
Galvanizing :- BS 729
Threads :- ISO Metric
Nut :- BS 4190 Grade 4.0

NAME OF THE ITEM	QTY	MATERIAL
V-HANGER ONLY FOR TELESCOPIC POLE	1	H.D.G STEEL
STAY WIRE (7/8 SWG) (IN METERS)	(M+POLE HEIGHT	H.D.G STEEL
STAY CLAMP WITH NUTS AND BOLTS	1	H.D.G STEEL
STAY ROD (2.5 M) WITH THIMBLE	1	H.D.G STEEL
ANCHOR PLATE (300 X 300 X 6MM)	1	H.D.G STEEL
TURN BUCKLE ASSEMBLEY WITH THIMBLE	1	H.D.G STEEL
GUY PREFORMED SUITABLE FOR 7/8 SWG	4	GALVANISED STEEL WIRE
STAY INSULATOR	1	PORCELAIN

BHUTAN POWER CORPORATION LIMITED

ENGINEERING DESIGN & CONTRACTS DEPARTMENT

DISTRIBUTION DESIGN & CONSTRUCTION STANDARD

STAY SET ASSEMBLY

DESIGNATION	NAME	DATE
DRAFTSMAN		
DESIGNER		
DESIGN CHECK		
PROJECT MANAGER		
PROJECT DIRECTOR		

DRAWIING NO. BPC-DDCS-2015-51

REVISION 2015

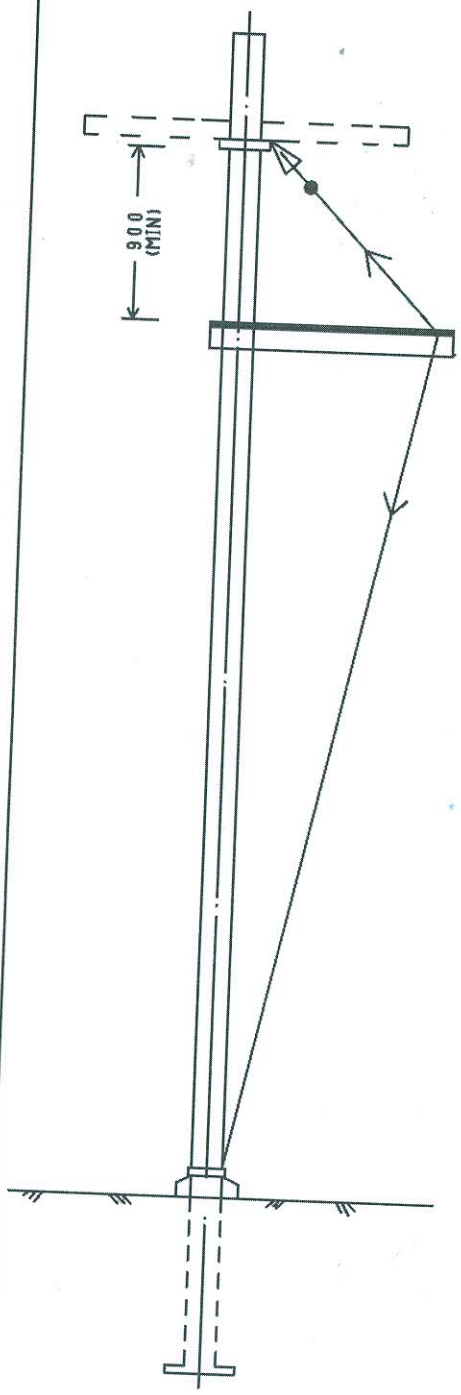

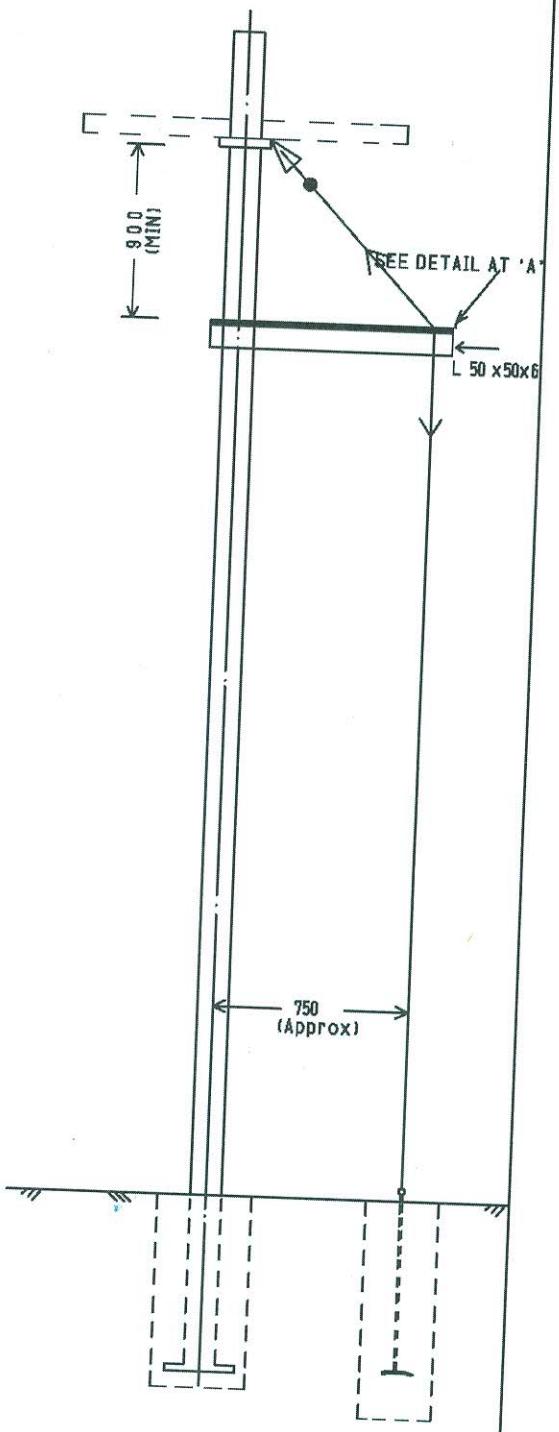

BHUTAN POWER CORPORATION LIMITED			ENGINEERING DESIGN & CONTRACTS DEPARTMENT
			DISTRIBUTION DESIGN & CONSTRUCTION STANDARD
DESIGNATION	NAME	DATE	ARRANGEMENT OF BOW-GUY
DRAFTSMAN			
DESIGNER			
DESIGN CHECK			
PROJECT MANAGER			DRAWING NO. BPC-DDCS-2015-60/1 — REVISION 2015
PROJECT DIRECTOR			

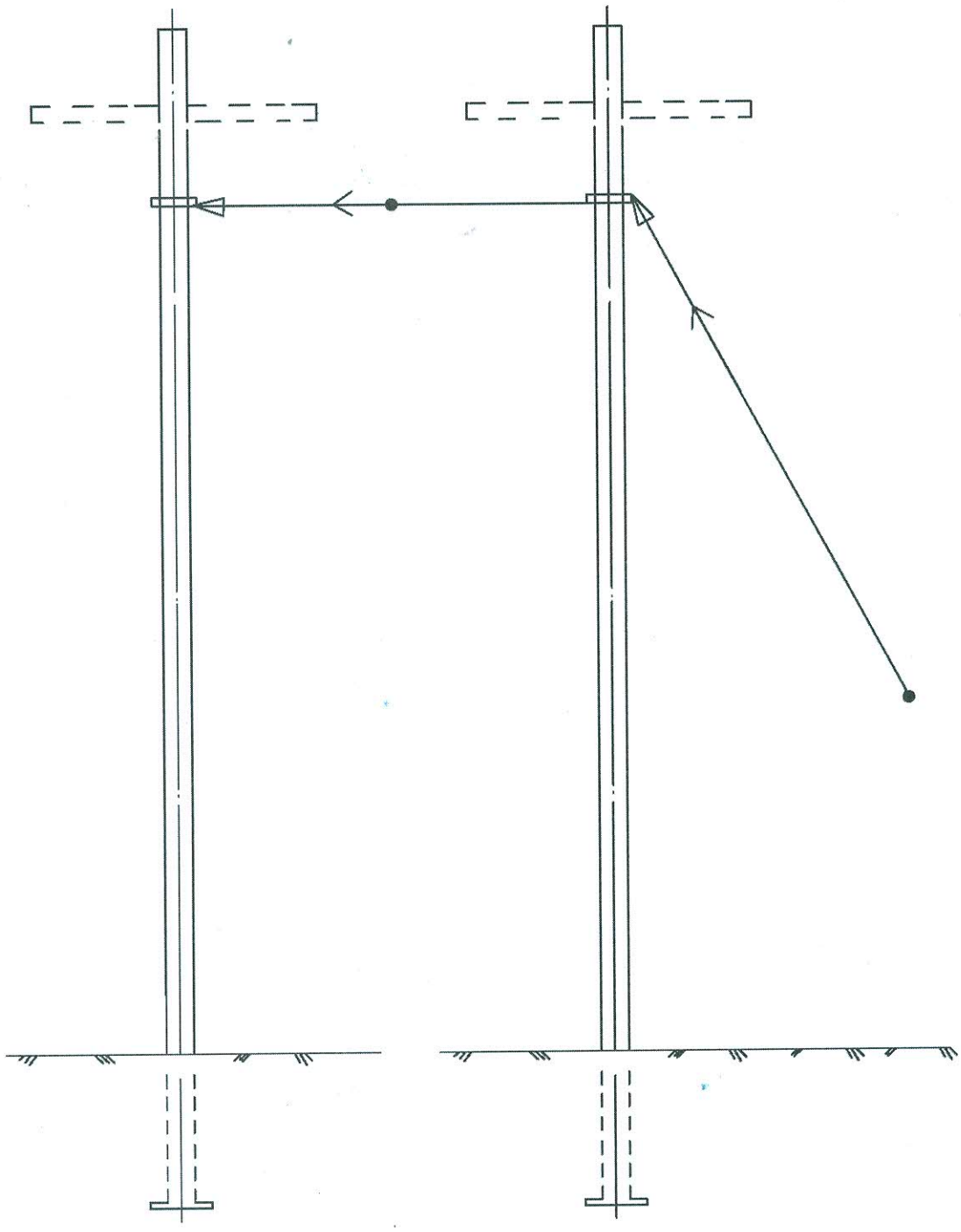

BHUTAN POWER CORPORATION LIMITED	ENGINEERING DESIGN & CONTRACTS DEPARTMENT	
	DISTRIBUTION DESIGN & CONSTRUCTION STANDARD ARRANGEMENT OF FLY-GUY	
DESIGNATION / NAME / DATE DRAFTSMAN DESIGNER DESIGN CHECK PROJECT MANAGER PROJECT DIRECTOR	DRAWING NO. BPC-DDCS-2015-60/2	REVISION 2015

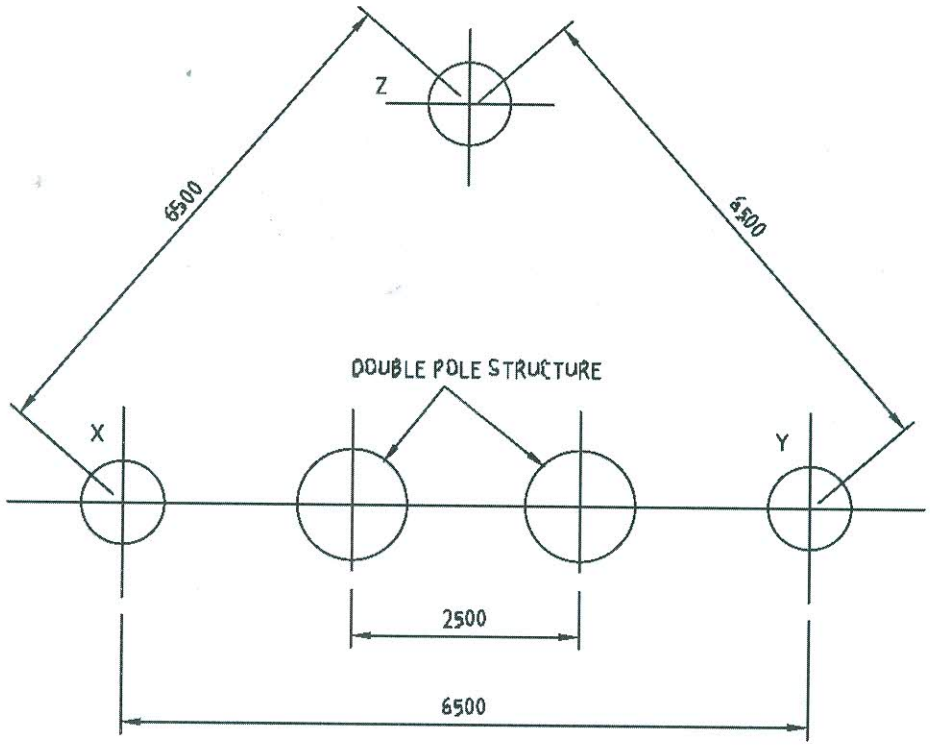

NOTES

1. THE CONNECTIONS TO THE THREE EARTH ELECTRODES SHOULD BE AS FOLLOWS:
   a. TO ONE OF THE EARTH ELECTRODES ON EITHER SIDE OF DOUBLE POLE STRUCTURE (X-Y)
      ONE DIRECT CONNECTION FROM 33kV OR 11kV NEUTRAL LIGHTNING ARRESTERS AND TRANSFORMER TANK
   b. TO EACH OF THE REMAINING TWO EARTH-ELECTRODES
      (i) ONE SEPARATE CONNECTION FROM THE NEUTRAL OF THE LOW VOLTAGE SIDE OF THE TRANSFORMER.
      (ii) ONE SEPARATE CONNECTION FROM TERMINAL EARTH OF TRANSFORMER LT PANEL .
      (iii) ONE SEPARATE CONNECTION FROM BODY OF TRANSFORMER LT PANEL .
2. 25 x 6 mm GALVANISED IRON STRAP LEADS.
3. THREE NOS. 40mm x 2500mm PIPE ELECTODES.
4. EARTH ELECTRODES X,Y AND Z TO BE BONDED TOGETHER USING 25x6mm GALVANISED IRON STRAP BURIED 100mm BELOW GROUND LEVEL.
5. REFER DWG BPC-DDCS-2015-66 FOR EARTH POINTS ON TRANSFORMER AND STRUCTURE.

BHUTAN POWER CORPORATION LIMITED			ENGINEERING DESIGN & CONTRACTS DEPARTMENT
			TITLE : DISTRIBUTION DESIGN & CONSTRUCTION STANDARD 33 kV OR 11 kV / 415 V DISTRIBUTION SUB-STATION PIPE EARTHING
DESIGNATION	NAME	DATE	
DRAFTSMAN			
DESIGNER			
DESIGN CHECK			DRAWING NO. BPC-DDCS-2015-64 / REVISION 2015
PROJECT MANAGER			
PROJECT DIRECTOR			

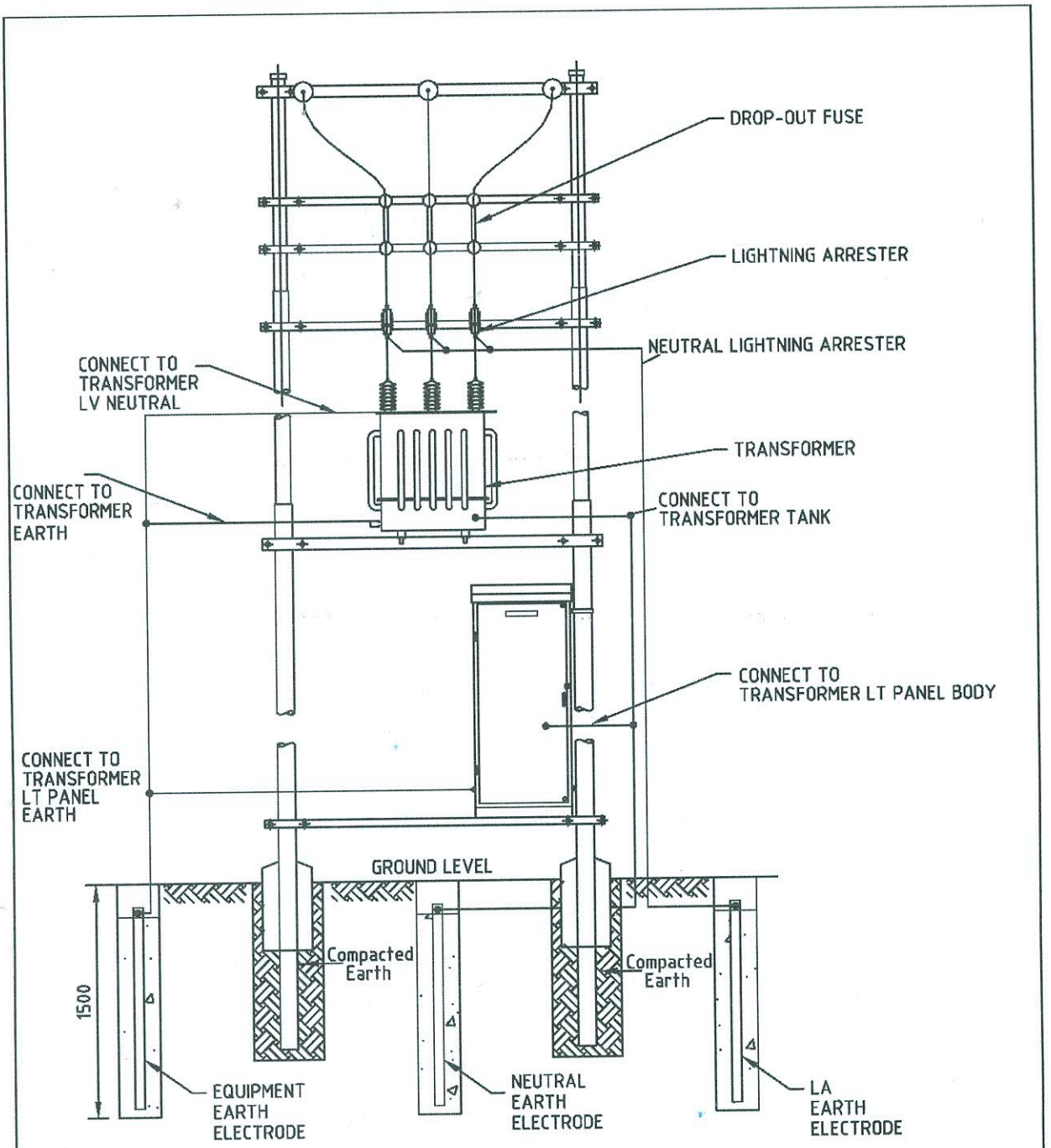

NOTES

1. DIMENSIONS AS SHOWN ARE IN mm.
2. DRAWING IS NOT TO SCALE.
3. EARTH CONDUCTOR IS 25 x 6 MS FLAT

BHUTAN POWER CORPORATION LIMITED

ENGINEERING DESIGN & CONTRACTS DEPARTMENT

TITLE : DISTRIBUTION DESIGN & CONSTRUCTION STANDARD

DISTRIBUTION SUBSTATION TYPICAL EARTHING SCHEME ARRANGEMENT

DESIGNATION	NAME	DATE
DRAFTSMAN		
DESIGNER		
DESIGN CHECK		
PROJECT MANAGER		
PROJECT DIRECTOR		

DRAWING NO. BPC-DDCS-2015-65

REVISION 2015

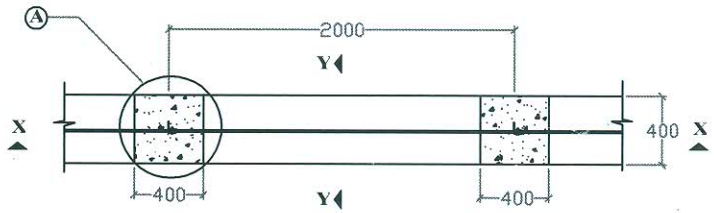

PLAN

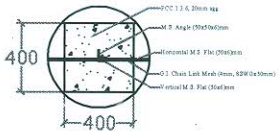

Detail at A

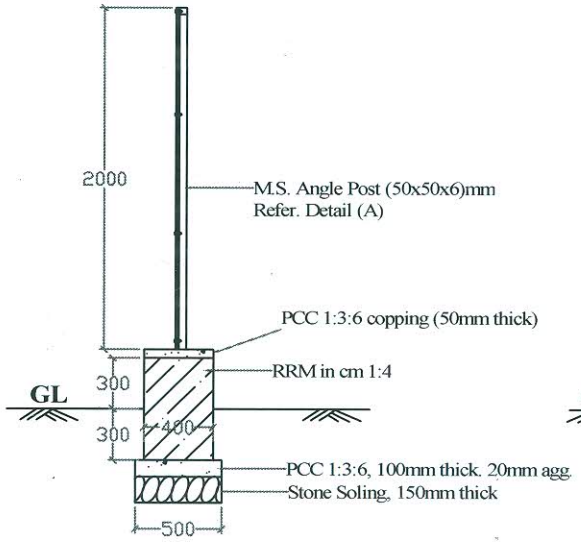

SECTION (Y-Y)

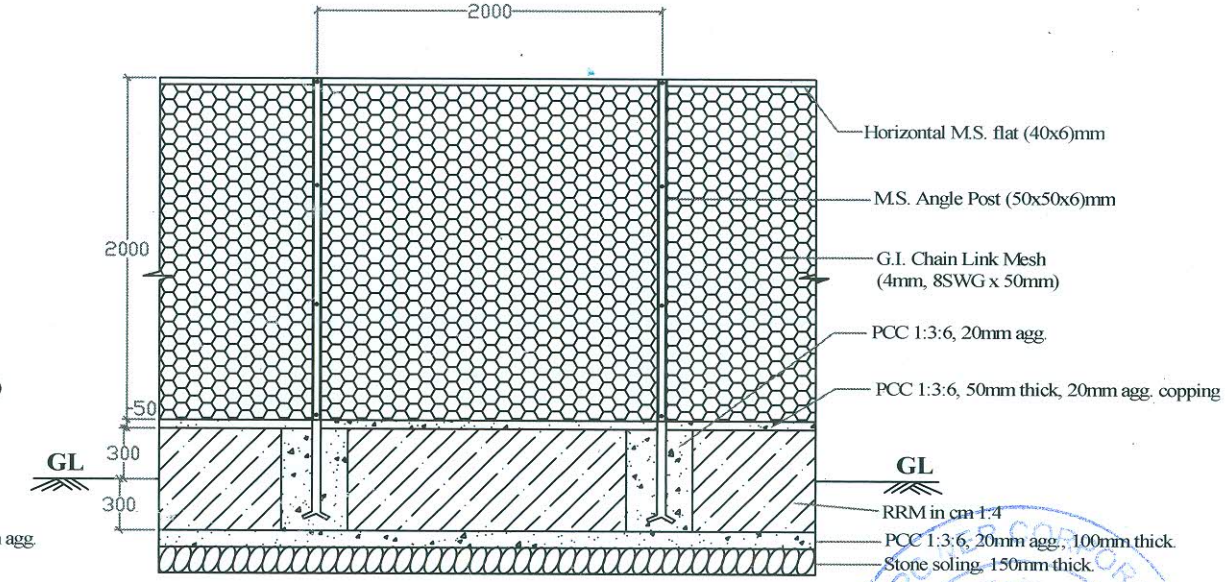

SECTIONAL ELEVATION (X-X) FRONT/LEFT & RIGHT SIDE

Note: Dimensions shown are in millimetres

11kV SUB-STATION WITH G.I. CHAIN LINK MESH (8x8Mtrs)

BHUTAN POWER CORPORATION LTD. BPC TRONGSA : BHUTAN

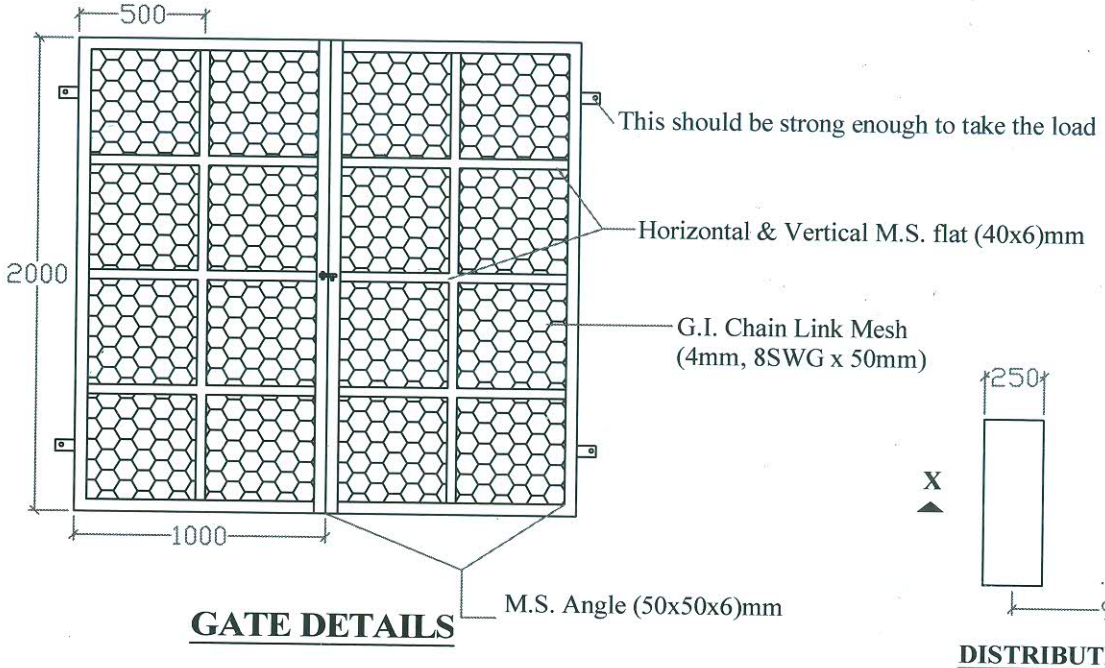

GATE DETAILS

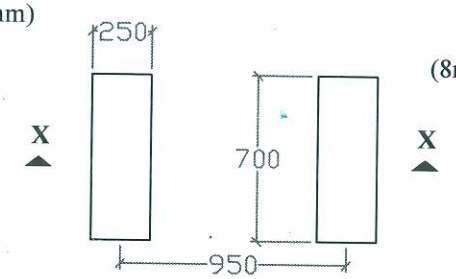

DISTRIBUTION PILLAR PLAN

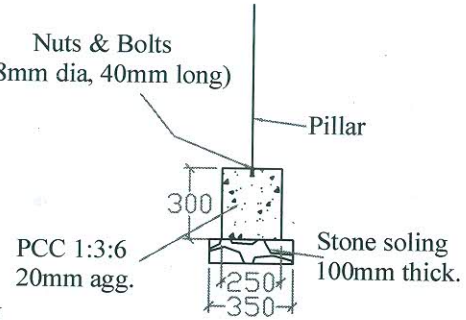

SECTION (X-X)

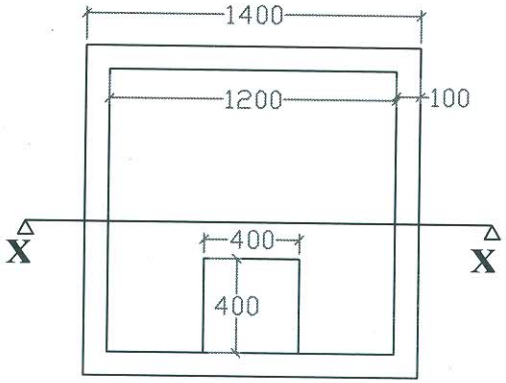

TRANSFORMER PLINTH PLAN

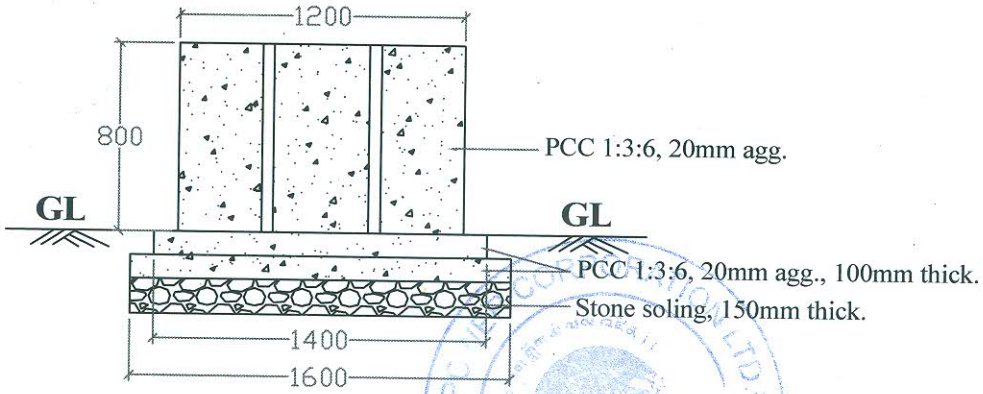

SECTIONAL ELEVATION (X-X)

Note: Dimensions shown are in millimetres

TRANSFORMER PLINTH AND GATE DETAIL

PCC 1:2:4, 20mm agg.,
100mm thick.

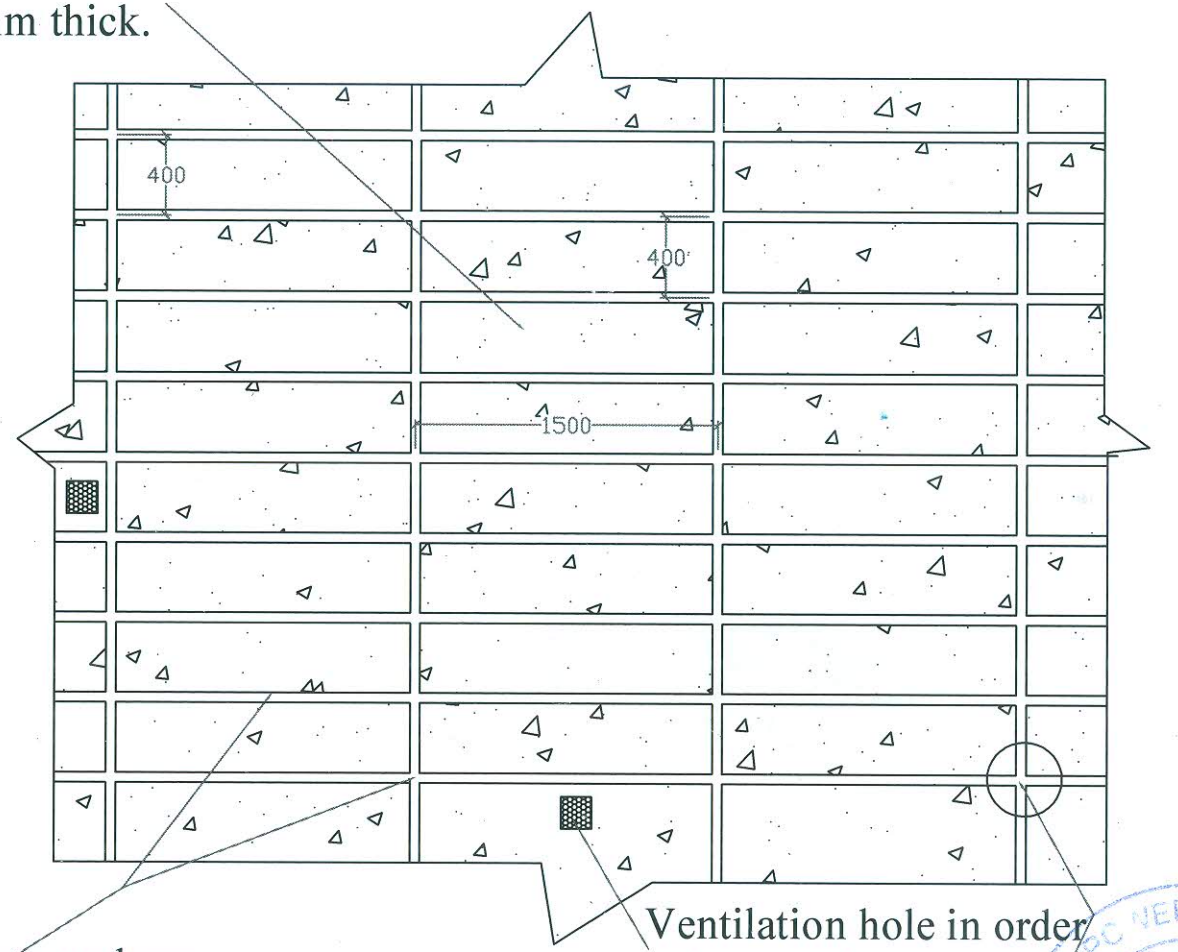

100x75mm undress
timber bottom wood

Ventilation hole in order
to keep moisture out

Plan for Undressed
Timber Framing

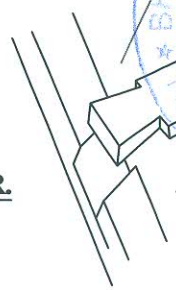

BHUTAN POWER CORPORATION LTD.
BPC
THIMPHU, BHUTAN

UNDRESSED TIMBER FRAME PLAN AT SHERUBLING STAFF QUARTER.

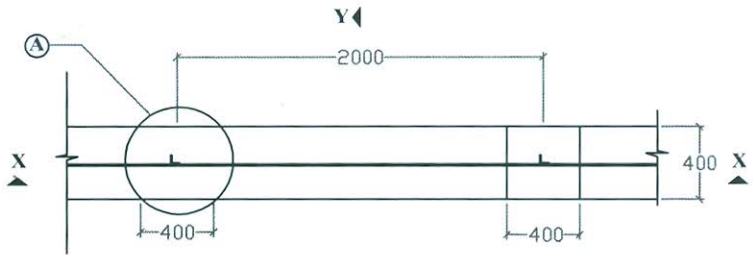

PLAN

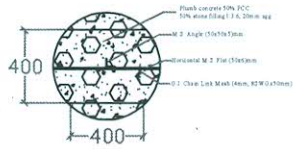

Detail at A

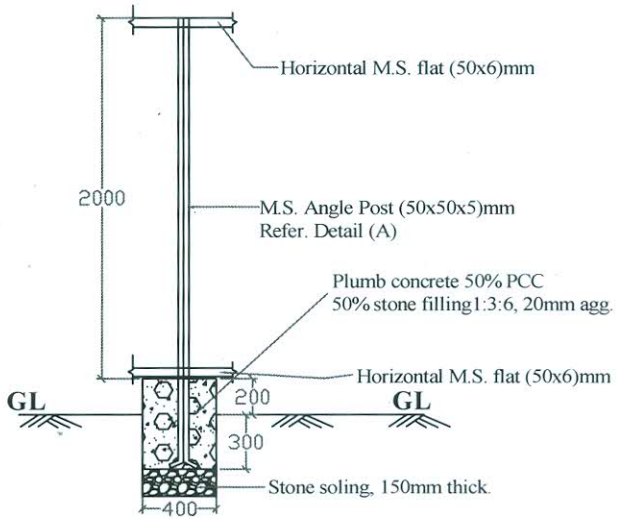

SECTION (Y-Y)

Note: Dimensions shown are in milimitres

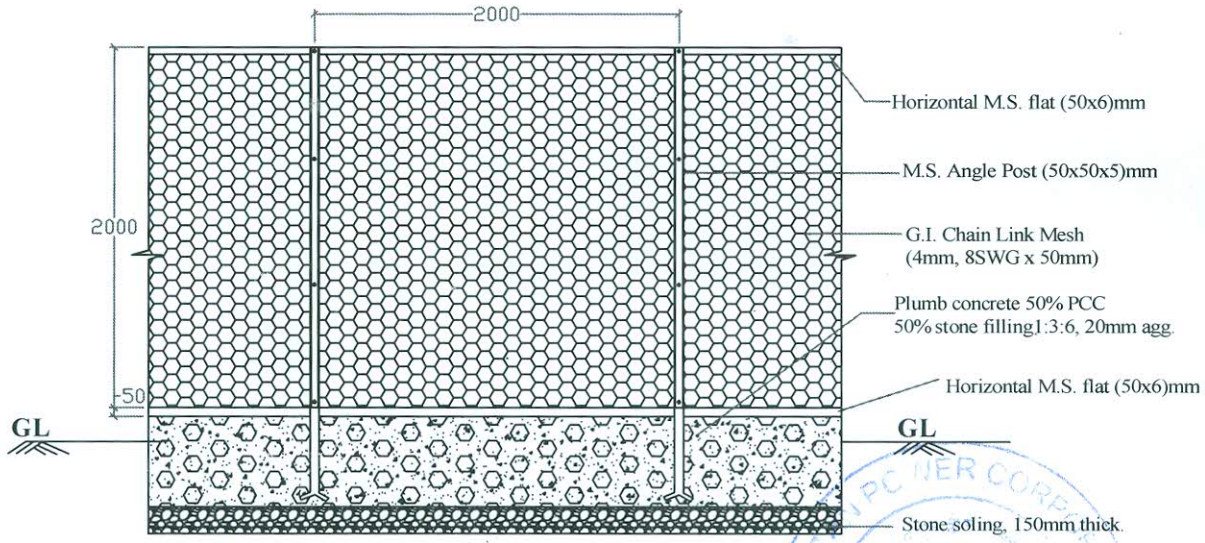

SECTIONAL ELEVATION (X-X)

BOUNDARY FENCING WITH G.I. CHAIN LINK MESH AT ESD, OFFICE (TRONGSA)

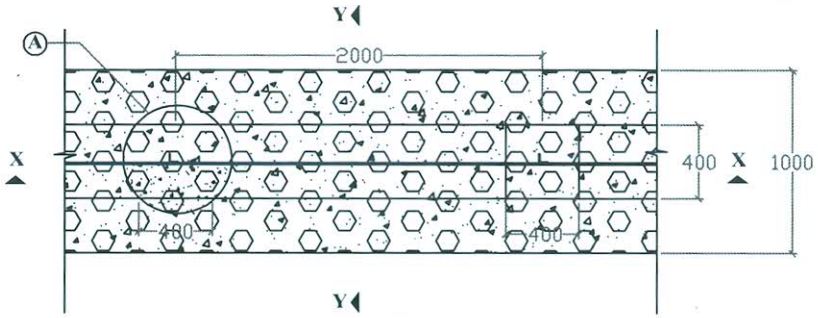

PLAN

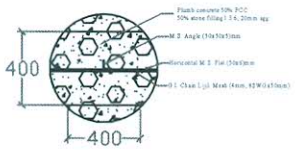

Detail at A

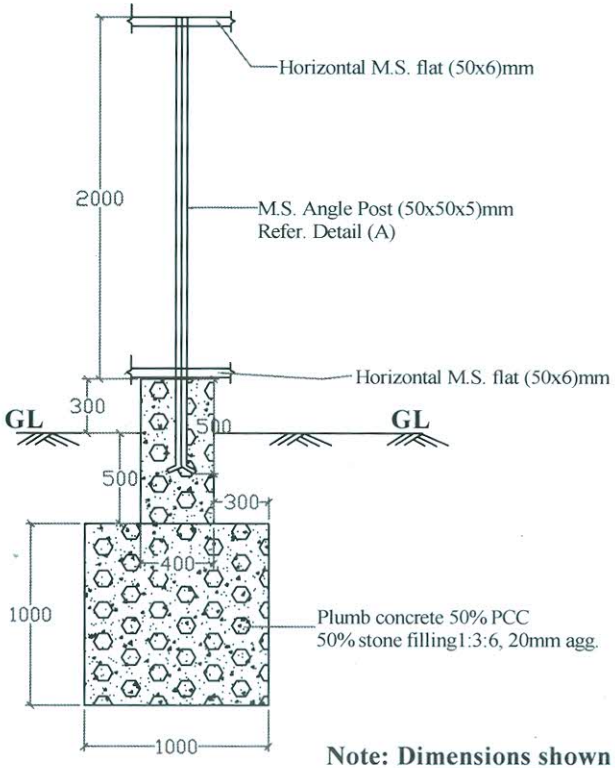

SECTION (Y-Y)

Note: Dimensions shown are in milimitres

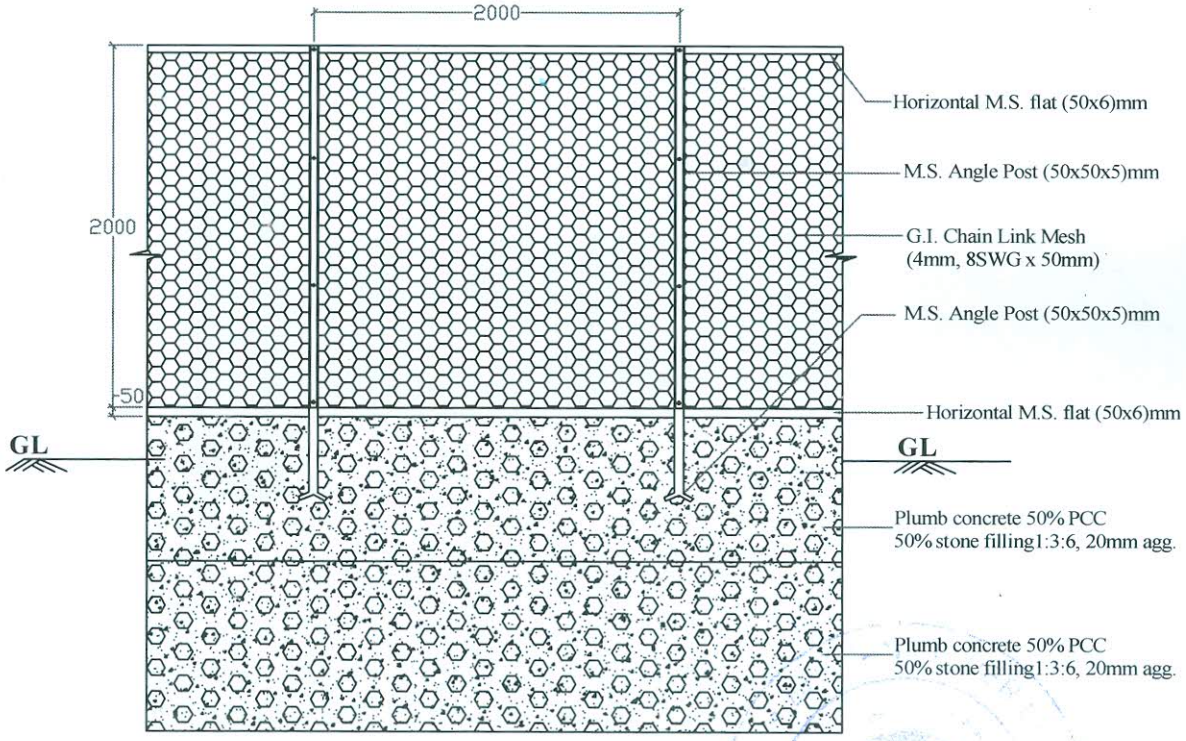

SECTIONAL (X-X)

BOUNDARY FENCING WITH G.I. CHAIN LINK MESH AT ESD, OFFICE (TRONGSA)

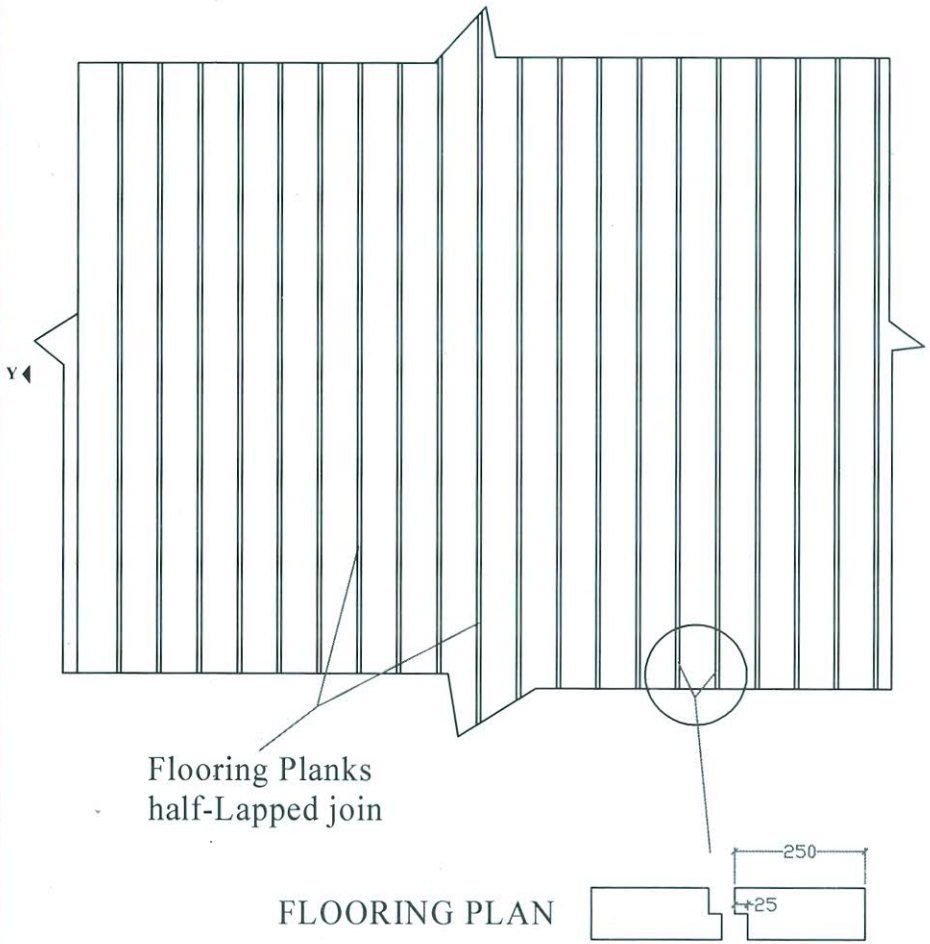

FLOORING PLAN

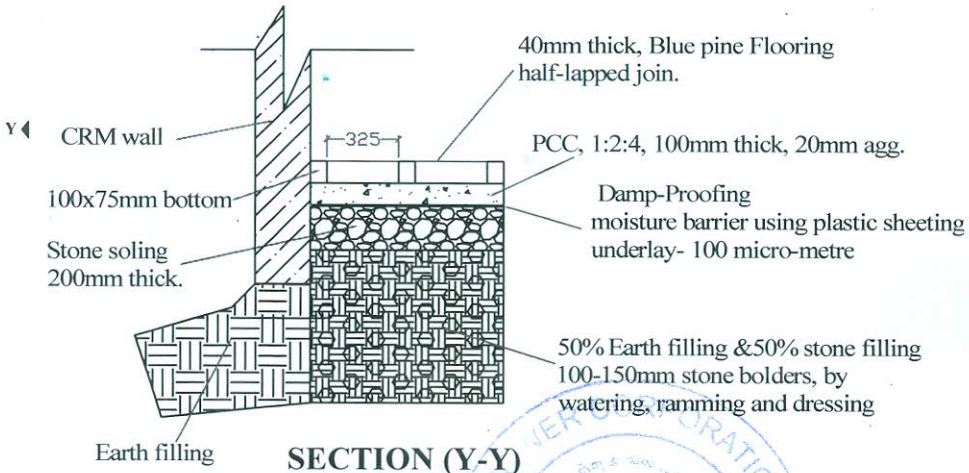

SECTION (Y-Y)

Note: Dimensions shown are in millimetres

FLOORING PLAN AT SHERUBLING STAFF QUARTER.

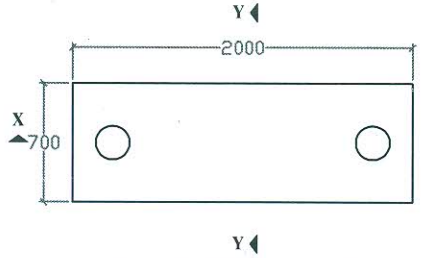

PLAN DOUBLE POLE

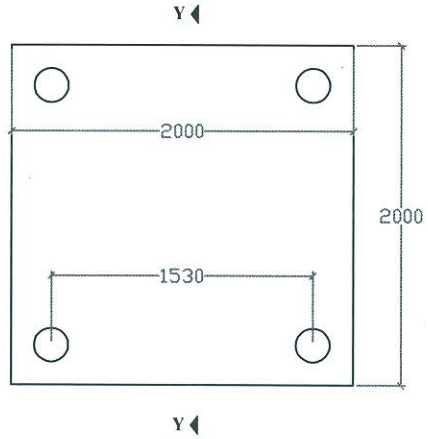

PLAN FOUR (4) POLE

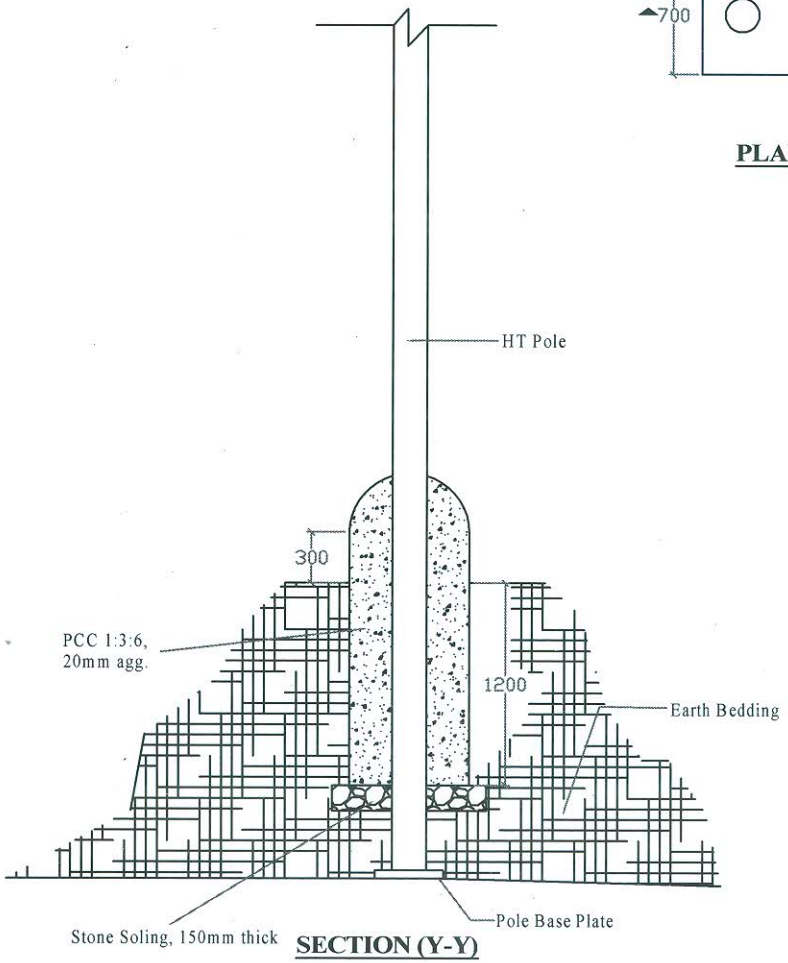

SECTION (Y-Y)

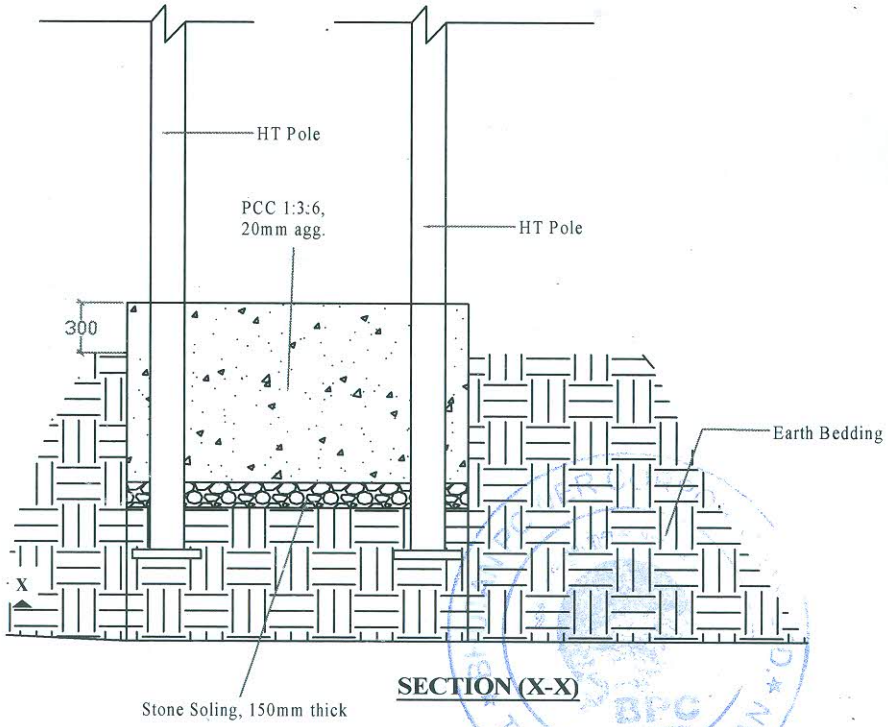

SECTION (X-X)

Note: Dimensions shown are in millimetres

HT POLE BASE PCC CASTING AT SAMTSHOLING DHI PROJECT

BPC TRONGSA BHUTAN

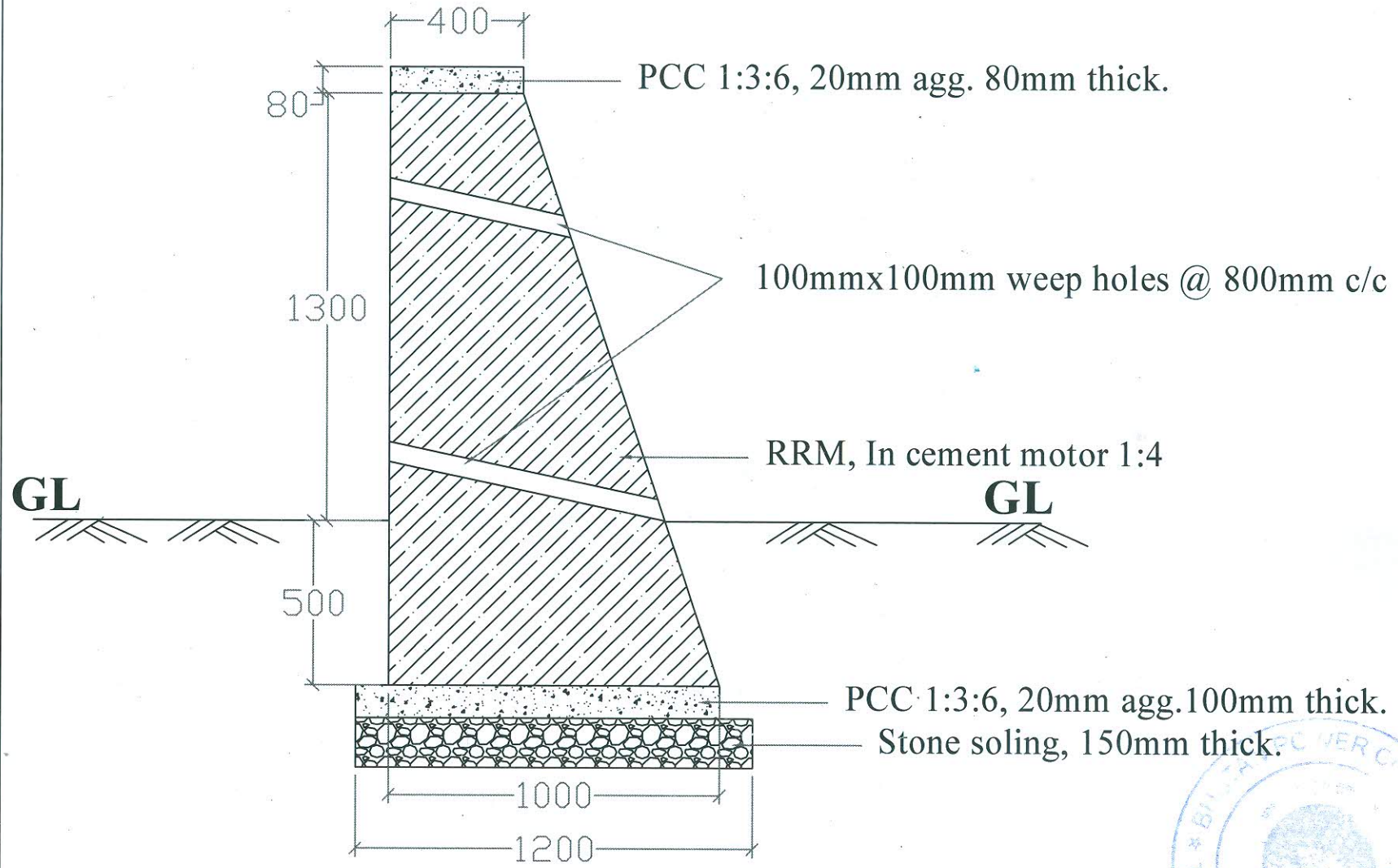

Note: Dimensions shown are in millimetres

RRM RETAINING WALL (SITE DEVELOPMENT)
NEAR DASHO DZONGRAB RESIDENT

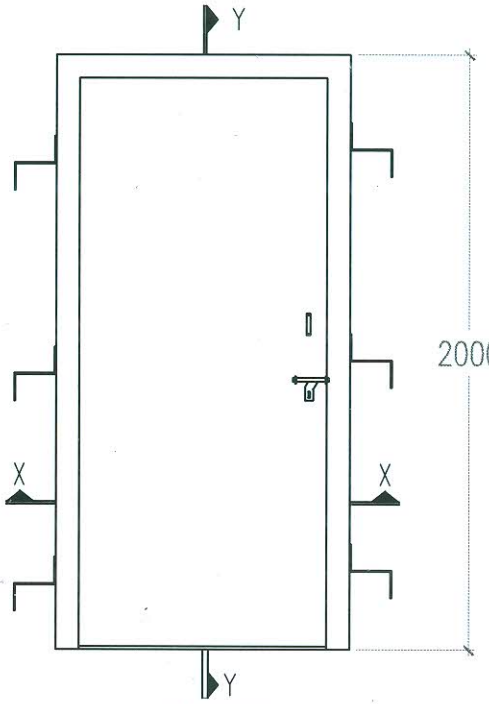

ELEVATION

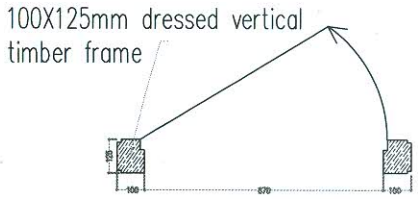

SECTION X–X

DOOR–D2

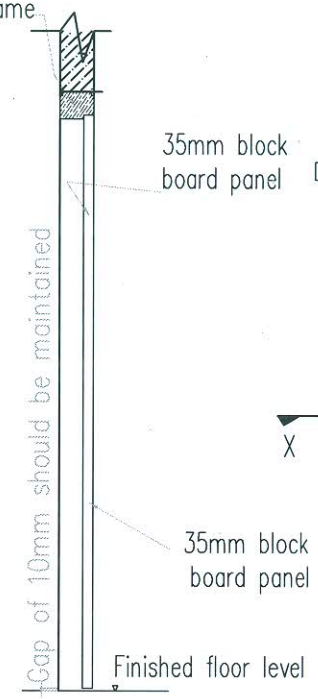

SECTION Y–Y

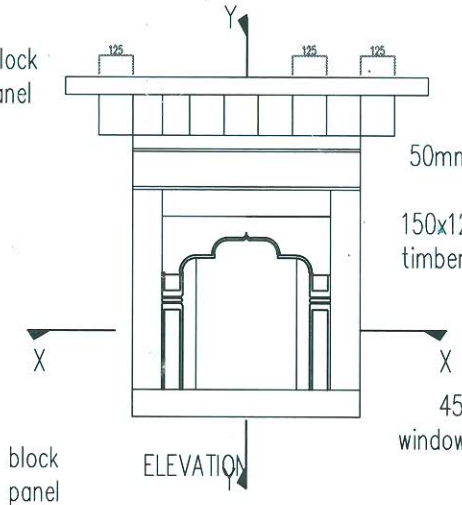

ELEVATION

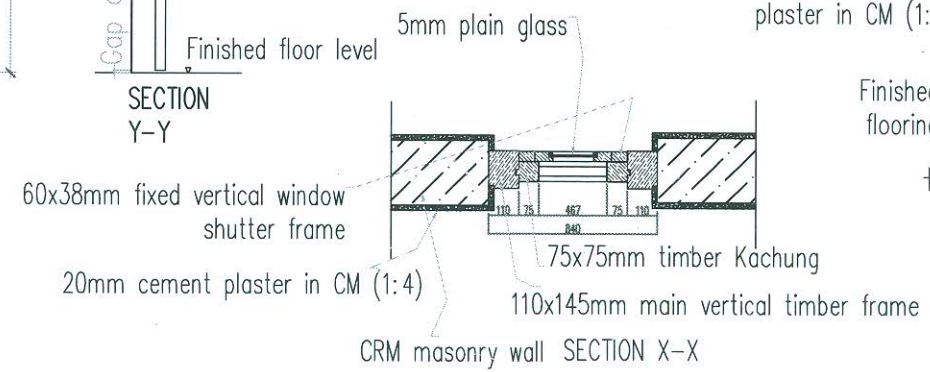

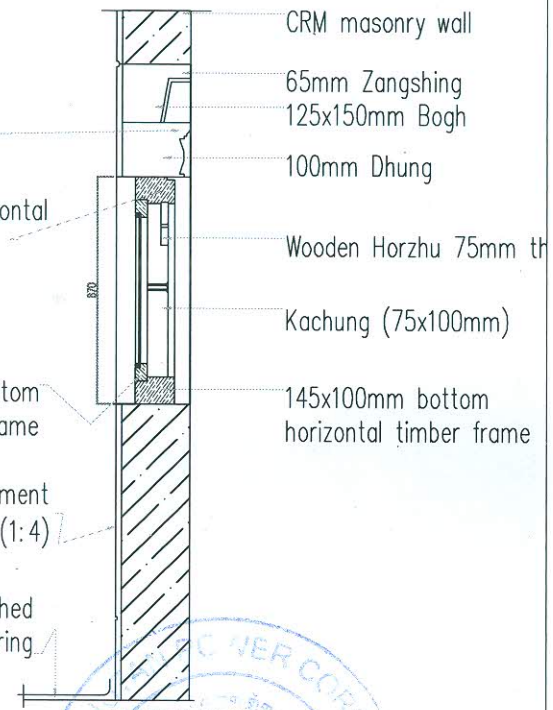

SECTION Y–Y

DOOR AND WINDOW DETAILS