BHUTAN POWER CORPORATION LIMITED

THIMPHU: BHUTAN

TENDER DOCUMENT

(TENDER NO. BPC/C&PD/CMS/ TENDER-2026/01)

FOR

SUPPLY, CONSTRUCTION, TESTING AND COMMISSIONING OF 66 kV DOUBLE CIRCUIT TRANSMISSION LINE FROM SEMTOKHA SUBSTATION TO DECHENCHOLING SUBSTATION, THIMPHU, BHUTAN

January, 2026

CONTENTS

VOLUME I & II	**INSTRUCTION TO BIDDERS, CONDITIONS OF CONTRACT, TECHNICAL SPECIFICATIONS & SAMPLE FORMS**
	NOTICE INVITING BID
SECTION 1	INSTRUCTIONS TO BIDDERS
SECTION 2	CONDITIONS OF THE CONTRACT PART I - GENERAL CONDITIONS OF THE CONTRACT
SECTION 3	CONDITIONS OF THE CONTRACT PART II - CONDITIONS OF PARTICULAR APPLICATION
SECTION 4	TECHNICAL SPECIFICATIONS AND DRAWINGS
SECTION 5	FORM OF BID, APPENDIX TO BID, INTEGRITY PACT, MANUFACTURER'S AUTHORISATION / UNDERTAKING
SECTION 6	SAMPLE FORM OF AGREEMENT
SECTION 7	SAMPLE FORMS OF SECURITIES
SECTION 8	SCHEDULES OF SUPPLEMENTAL INFORMATION

(ALL THE ABOVE SECTIONS ARE IN VOLUME I EXCEPT SECTION 4, WHICH IS IN VOLUME II)

VOLUME III	**PRICE SCHEDULE, INCLUDING BILL OF QUANTITIES**
SECTION 9	PREAMBLE TO PRICE SCHEDULE PRICE SCHEDULES

BHUTAN POWER CORPORATION LIMITED

THIMPHU: BHUTAN

BPC/C&PD/CMS/TENDER-2026/05 **January 08, 2026**

NOTICE INVITING TENDER

Bhutan Power Corporation Limited (BPC) is pleased to invite Single Stage two envelope-sealed bids from registered eligible large Bhutanese & International firms and joint ventures from these firms for the "Supply, Construction, Testing & Commissioning of a 66kV D/C transmission line from Semtokha substation to Dechencholing substation, Thimphu, Bhutan" (Tender number: BPC/C&PD/CMS/TENDER-2026/01), as defined in the bidding document (hereinafter referred to as the Works). The brief details of the bid are as follows:

1	Bid No. & date	BPC/C&PD/CMS/TENDER-2026/01
2	Bid Description	Supply, Construction, Testing & Commissioning of a 66kV D/C transmission line from Semtokha substation to Dechencholing substation, Thimphu, Bhutan.
3 a) b) c) d) e) f)	Bid Details: Cost of bid document: Bid Sale Date: Place of sale (address): Submission of bids: Opening of bids: Venue for opening of bids:	 Nu. 15,000.00 (Non- refundable). 8th January 2026 to 5th February 2026 (Working Hours) CMS, CD, PCD, BPC, Thimphu. (Telephone no. 02-322046). 5th February 2026 (on or before 14:00 hours). 5th February 2026 (14:30 hours). BPC conference hall, Thimphu.

The bidding document can be purchased by any interested eligible bidder on the submission of written application together with valid trade license to the above address. Bidding documents can also be downloaded from the BPC's website www.bpc.bt free of cost. The bidder who have downloaded the bid document and wish to participate should register with CMS, CD, C&PD, BPC, Thimphu prior to the bid sale date.

BPC reserves the right to reject or accept the Bids or annul the bidding process without assigning any reason.

Chief Manager

SECTION 1
INSTRUCTION TO BIDDERS

SECTION 1

INSTRUCTIONS TO BIDDER

Table of Clauses

A. GENERAL

1. Scope of Bid
2. Eligible Bidders
3. Origin of Materials, Equipment and Services
4. Qualification of the Bidder
5. One Bid per Bidder
6. Cost of Bidding
7. Site Visit

B. BIDDING DOCUMENTS

8. Contents of Bidding Documents
9. Clarification of Bidding Documents
10. Amendment of Bidding Documents

C. PREPARATION OF BIDS

11. Language of Bid
12. Documents Comprising the Bid
13. Bid Prices
14. Currencies of Bid and Payment
15. Bid Validity
16. Bid Security
17. Alternative Proposals by Bidders
18. Pre-Bid Meeting
19. Format and Signing of Bid

D. SUBMISSION OF BIDS

20. Sealing and Marking of Bids
21. Deadline for Submission of Bids
22. Late Bids
23. Modification and Withdrawal of Bids

E. BID OPENING AND EVALUATION

24. Bid Opening – Opening of Bids
25. Process to be Confidential.
26. Clarification of Bids
27. Preliminary Examination of Bids and Determination of Responsiveness
28. Correction of Errors
29. Evaluation and Comparison of Bids

F. AWARD OF CONTRACT

30. Award
31. Employer's Right to Accept any Bid and to Reject any or all Bids
32. Notification of Award
33. Signing of Agreement
34. Performance Security
35. Fraud & Corruption

Bid Data Sheet (BDS)

SECTION 1 - INSTRUCTIONS TO BIDDERS

A. GENERAL

1. **Scope of Bid**

1.1 Bhutan Power Corporation Limited (BPC) intends to construct a 1x66kV double circuit from Semtokha substation to Dechencholing Substation (loop-in loop-out (LILO) of existing 66 kV Dechencholing - Damji line), along with the necessary line termination works including supply of cables, vertical XLPE cable drop arrangement on transmission terminal tower and construction of cable burial system, at Semtokha substation in Thimphu Dzongkhag, Bhutan, as defined in the bidding document (hereinafter referred to as the Works).

1.2 The Successful bidders will be expected to complete the Works within contract period as described in the BDS from the date of Commencement of the Works, as defined in the Conditions of Contract.

2. **Eligible Bidders**

2.1 Eligible bidders are the contractors who fulfill the Qualification Requirements given in Clause 4 and meet the following requirements:

A bidder or any of its affiliates shall not be affiliated with a firm or entity:

(i) which has provided consulting services to the Employer during the preparatory stages of the Works or of the project of which the Works form a part, or

(ii) which has been hired (or is proposed to be hired) by the Employer as Engineer for the Contract.

2.2 Bidders shall provide such evidence of their eligibility satisfactory to the Employer as the Employer shall reasonably request.

3. **Origin of Materials, Equipment And Services**

3.1 The Origin of Materials, Equipment and Services to be supplied for this Project shall be from sources, which do not contravene the statutory requirements of Royal Government of Bhutan. "Origin" means the place where the materials and equipment are mined, grown, produced or manufactured, and from which the services are provided. Materials and equipment are produced when, through manufacturing,

processing or substantial or major assembling of components, a commercially recognized product results that is substantially different in basic characteristics or in purpose or utility from its components.

4. **Qualification Of the Bidder**

4.1 To be qualified for award of Contract, bidders shall:

a) Submit copies of documents defining the constitution or legal status, place of registration, and principal place of business of the bidder. Bhutanese bidders participating as Partner In Charge (Contractor Category as described in the BDS) and Joint Venture Partner (Contractor Category as described in the BDS) must be registered with Construction Development Board of Bhutan and possess valid license as a perquisite for their bid to be considered;

b) submit duly signed Integrity Pact by the authorized signatory of the bid;

c) submit a written power of attorney authorizing the signatory of the bid to commit the bidder;

d) submit satisfactory evidence concerning the following:

i) The bidder is a qualified manufacturer/ erector/ or an authorized representative of a qualified manufacturer/ erector who regularly manufactures/ erects the equipment/ materials of the type quoted and has the adequate technical knowledge and practical experience.

ii) The bidder does not anticipate change in ownership during the proposed period of work (if such a change is anticipated, the scope and effect thereof shall be defined).

iii) The bidder has adequate financial capability to meet the financial obligations pursuant to the scope of the works. The bidder shall submit Audited Balance Sheet for the recent five (5) years.

iv) The bidder has or has access to adequate plant and manufacturing capacity to execute

the works within the time specified. The evidence shall consist of written details of the installed manufacturing capacities and present commitments (excluding the work under this specification) of the bidder or his principal. If the present commitments are such that the installed capacity results in inadequacy of the manufacturing capacity to meet the requirement of equipment/ materials corresponding to this tender then the details of alternative arrangements made shall also be furnished.

v) The bidder has adequate field service organization to provide the necessary field erection and management services required to successfully erect, test and commission, the equipment/ materials as required under the specifications.

vi) The bidder has established Quality Assurance System and Design Organization to achieve high level of equipment/ material reliability during manufacture and installation.

vii) The bidder should provide details of any current litigation that he is involved with.

4.2 Bids submitted by a Joint Venture, if so, permitted in the BDS, of two or more firms as partners shall comply with the following requirements:

a) the bid, and in case of a successful bid, the Form of Agreement, shall be signed so as to be legally binding on all partners;

b) one of the partners shall be authorized to be in charge (referred as Lead Partner or Partner-In-Charge); and this authorization shall be evidenced by submitting a power of attorney, as per the format in Section 5, signed by legally authorized signatories of all the partners;

c) the Partner-In-Charge/Lead Partner shall meet all the Qualification Requirements by itself and each of the other partners shall meet at least 25% of the technical or financial qualification requirements;

d) the Partner-In-Charge shall be authorized to incur liabilities and receive instructions for and on behalf of any or all partners of the joint venture and the entire execution of the Contract including payment shall be done exclusively with the partner-in-charge. The partner-in-charge cannot transfer his responsibility / authority to any other partners during the currency of the contract;

e) all partners of the joint venture shall be jointly and severally liable for the execution of the Contract in accordance with the Contract terms, and a relevant statement to this effect shall be included in the authorization mentioned under (b) above as well as in the Bid Form and the Form of Agreement (in case of successful bid); and

f) a copy of the undertaking / agreement entered into by the joint venture partners, as per the format in Section 5, shall be submitted with the bid.

4.3 Bidders shall also submit proposals of work methods and schedule, in sufficient detail to demonstrate the adequacy of the bidders' proposals to meet the technical specifications and the completion time referred to in Sub-Clause 1.2 above.

4.4 Qualification will also be based on meeting all the following minimum criteria regarding the Bidder's general and particular experience, personnel and equipment capabilities and financial position as demonstrated by the Bidder's responses in the corresponding schedules to the Bid.

The Owner reserves the right to waive minor deviations if they do not materially affect the capability of a Bidder to perform the Contract.

4.5 Experience of the Bidder

The Bidder and in case of JV, the Partner-in-charge, shall meet the following minimum qualification criteria:

(a) Technical Qualification Requirements as indicated in the BDS.

(b) Financial Qualification Requirements as indicated in the BDS.

4.6 Qualification of Associate Contractors/ Manufacturer's

A list of approved manufacturers, if applicable, whose products only are to be supplied is indicated in the technical specifications. The Employer may approve alternative suppliers in case of closure/ merger of the specified makes. The Employer may also approve alternative suppliers, if the credentials of the Supplier are established to the satisfaction of the Employer based on documentary evidence and / or factory assessment of the Supplier. The Bidders at the time of Bid submission may propose alternative Suppliers with the provison that if the proposed Supplier is not acceptable to the Employer, the Bidder will supply the material from the suppliers in the Employer's approved list without any cost implications.

The bidder shall furnish the manufacturer's authorization along with the offer in the formats provided in this bidding document.

5 **One Bid per Bidder**

5.1 Each bidder shall submit only one bid either by itself, or as a partner in a joint venture or as a responsible officer in the management of the company. A bidder who submits or participates in more than one bid other than alternatives pursuant to Sub-Clause 17.1 will be disqualified.

6. **Cost of Bidding**

6.1 The bidder shall bear all costs associated with the preparation and submission of its bid and the Employer will in no case be responsible or liable for those costs.

7. **Site Visit**

7.1 The bidder is advised to visit and examine the Site of Works and its surroundings and obtain for itself on its own responsibility all information that may be necessary for preparing the bid and entering into a contract for the Works. The costs of visiting the Site shall be at the bidder's own expense and at his own risk.

7.2 The bidder and any of its personnel will be granted permission by the Employer to enter upon its premises and lands for the purpose of such inspection, but only upon the express condition that

the bidder, its personnel, will release and indemnify the Employer and its personnel from and against all liability in respect thereof and will be responsible for death or personal injury, loss of or damage to property and any other loss, damage, costs and expenses incurred as a result of the inspection.

7.3 The Employer may conduct a Site visit concurrently with the Pre-Bid Meeting referred to in Clause 18.

B. BIDDING DOCUMENTS

8. Content of Bidding Documents

8.1 The bidding documents are those stated below, and should be read in conjunction with any Addenda issued in accordance with Clause 10.

		Letter seeking offer
Section	1.	Instructions to Bidders
Section	2.	General Conditions of Contract
Section	3.	Conditions of Particular Application
Section	4.	Technical Specifications
Section	5.	Forms of Bid, Appendix to Bid, Integrity Pact, Forms for Joint Venture and Bid Security
Section	6.	Form of Agreement
Section	7.	Forms of Performance Bank Guarantee and Bank Guarantee for Advance Payment
Section	8.	Schedules of Supplementary Information
Section	9.	Preamble to Price Schedule and Schedule of Prices (including Bill of Quantities)

The above sections shall be arranged in Volumes as described in BDS.

The bidder is expected to examine carefully the contents of the Bidding documents. Failure to comply with the requirements of bid submission will be at the bidder's own risk.

Pursuant to Clause 27, bids which are not substantially responsive to the requirements of the bidding documents shall be rejected.

9. Clarification Of Bidding Documents

9.1 A prospective bidder requiring any clarification of the bidding documents may notify the Employer in writing at the Employer's address indicated in BDS. The Employer will respond to any request for clarification, which it receives as described in BDS. Copies of the Employer's response will be forwarded

to all purchasers of the bidding documents, including a description of the enquiry.

10. **Amendment of Bidding Documents**

10.1 At any time prior to the deadline for submission of bids, the Employer may, for any reason, whether at its own initiative or in response to a clarification requested by a prospective bidder, or based on the proceedings of the pre-bid meeting modify the bidding documents by issuing addenda.

10.2 Any addendum thus issued shall be part of the bidding documents pursuant to Sub-Clause 8.1, and shall be communicated by the Employer in writing to all purchasers of the bidding documents. Prospective bidders shall acknowledge receipt of each addendum to the Employer.

10.3 To afford prospective bidders reasonable time in which to take an addendum into account in preparing their bids, the Employer may extend the deadline for submission of bids, in accordance with Clause 21.

C. PREPARATION OF BIDS

11. **Language of Bid**

11.1 The bid, and all correspondence and documents, related to the bid, exchanged between the bidder and the Employer shall be written in the English language. Supporting documents and printed literature furnished by the bidder may be in another language provided they are accompanied by an accurate translation of the relevant passages in the English language, in which case, for purposes of interpretation of the bid, the English translation shall prevail.

12. **Documents Comprising The Bid**

12.1 The bidder shall submit Technical and Price Bids separately. Technical bid will be opened first and evaluated. Price bid shall be opened only after the technical bid of a bidder is found acceptable.

12.2 Technical bid shall comprise of the following:

Technical Bid form, integrity pack, Appendix to Bid, Bid security, the information on eligibility and qualification, schedules of supplementary information including those for alternatives, where proposed by the bidder and any other materials required to be completed and submitted by Bidders in accordance with these Instructions to Bidders. The documents listed of Volume II, Part 1 shall be filled in without exception, subject to extensions thereof in the same format. The Technical Bid Form and Appendix to Bid shall be without any price information. The Bidder shall also submit soft copy of Schedules along with the bid.

12.3 Price bid shall comprise the following:

Price Bid form and Appendix to Bid, priced Bill of Quantities, Price Bids for alternatives where proposed by the bidder and any other material required to be completed and submitted by Bidders in accordance with these Instructions to Bidders.

13. Bid Prices

13.1 Unless stated otherwise in the Bidding documents, the Contract shall be for the whole Works as described in Sub-Clause 1.1, based on the schedule of unit rates and prices submitted by the bidder.

13.2 The Bidder must quote unit Free at Site (FAS) prices of all items (along with Ex-works prices) for delivery of items to the actual site of erection including any storage, carriage (during transit and at site) by head load (if any) charges etc. as may be necessary. The unit FAS price shall comprise of the following components:

Ex-works price, packing and forwarding charges, railway freight, transport charges to actual work site, storage as and where necessary, any pandemic related costs, charges for transit insurance against all risks and storage after receipt of equipment at destination stores, all taxes, duties and levies. Insurance of materials/ equipment/ goods at site is a mandatory requirement of the Royal Government of Bhutan.

13.3 The bidder shall fill in rates and prices for all items of the Works described in the Bill of Quantities. Items against which no rate or price is entered by the

bidder will not be paid for by the Employer when executed and shall be deemed covered by the other rates and prices in the Bill of Quantities.

13.4 All duties, taxes and other levies payable by the Contractor in Bhutan under the Contract, or any other clause, as of the date 28 days prior to the deadline for submission of bids shall be included in the rates and prices and the total bid price submitted by the bidder, and the evaluation and comparison of bids by the Employer shall be made accordingly. It is the responsibility of the Bidder to ascertain the value of applicable tax rates (Good and Services Tax / or Customs Duty and or any other applicable taxes / duties) for various items under Price Schedule and indicate the same in the price schedules. It shall be noted that payment towards such taxes / duties in Bhutan, will be limited to the value obtained by using the rate quoted in the Bid, unless there is any change in rates notified by relevant authorities after the date 28 days prior to the submission of Bids. In the event of such change by relevant authorities, the differential amount (increase or decrease) will be based on the differential rates between revised notified value and the maximum of (i) the rates assumed by the Bidder in its offer and (ii) the actual rate prevalent at the time 28 days prior to the due date of bid submission.

13.5 The rates and prices quoted by the bidder should be firm unless otherwise explicitly provided for as subject to adjustment during the performance of the Contract in accordance with Clause 70 of the Conditions Particular Application (Section 3).
(Note: No clause for TDS).

13.6 The bidder shall fill in rates and prices for all items of the Works described in the Bill of Quantities. Items against which the bidder enters no rate or price will not be paid for by the Employer when executed and shall be deemed covered by the other rates and prices in the Bill of Quantities. From Motangs s/s

14. **Currency of Bid and Payment**

14.1 The unit rates and the prices shall be quoted by the bidder entirely in Bhutanese Ngultrum and the payment will be made in Bhutanese Ngultrum.

15. **Bid Validity**

15.1 Bids shall remain valid till the date indicated in BDS.

15.2 In exceptional circumstances, prior to expiry of the original bid validity period, the Employer may request that the bidders extend the period of validity for a specified additional period. The request and the responses thereto shall be made in writing. A bidder may refuse the request without forfeiting its bid security. A bidder agreeing to the request will not be required or permitted to modify its bid but will be required to extend the validity of its bid security for the period of the extension, and in compliance with Clause 16 in all respects.

16. Bid Security

16.1 The bidder shall furnish, as part of its bid, a bid security in the amount as indicated in BDS.

16.2 The Bid Security shall, at the bidder's option, be in the form of a banker's certified cheque, cash warrant, standby letter of credit or bank guarantee drawn in favour of ***"General Manager, Finance & Accounts Division, Bhutan Power Corporation Limited, Thimphu, Bhutan"*** payable at any Bank/Financial Institution in Thimphu, Bhutan. The format of the bank guarantee shall be in accordance with the sample form of Bid Security included in Section 5. Letters of credit and bank guarantees issued, as surety for the bid shall be valid till the date as indicated in BDS.

Bid Security, provided by the bidder shall be from a Bank/Financial Institution in Bhutan.

16.3 Any bid not accompanied by an acceptable bid security shall be rejected by the Employer as non-responsive.

16.4 The bid securities of unsuccessful bidders shall be returned after signing of the Contract and submission of the Performance Security by the successful bidder, in any case not later than the expiration of the period of bid security validity.

16.5 The bid security of the successful bidder will be returned upon furnishing required performance security and signing of the Contract by bidder.

16.6 The bid security may be forfeited

(a) if the bidder withdraws its bid during the period of bid validity; or

(b) if the bidder does not accept the correction of its bid price, pursuant to Sub-Clause 28.2; or

(c) in the case of a successful bidder, if he fails within the specified time limit to

(i) sign the Agreement, or
(ii) furnish the required performance security.

17. **Alternative Proposals by Bidders**

17.1 Bidders wishing to offer technical alternatives to the requirements of the bidding documents must first price the Employer's design as described in the bidding documents and shall further provide all information necessary for a complete evaluation of the alternative by the Employer, including drawings, design calculations, technical specifications, breakdown of prices, and proposed construction methods. Only the technical alternatives, if any, of the lowest evaluated bidder conforming to the basic technical requirements shall be considered by the Employer for adoption, at the sole discretion of the Employer.

18. **Pre- Bid Meeting**

18.1 The bidder or its official representative is invited to attend a pre-bid meeting, which shall take place on date / time and place as indicated in BDS. To provide Bidders with an opportunity to visit site and assess the project requirements prior to the pre-bid meeting, a meeting shall be arranged by the Employer from date / time and to the places as indicated in BDS or on any other dates / places as amended. Bidders wishing to make a site visit are required to furnish the identification and other details of the representatives to the Employer at least 3 days in advance, if the Bidder requires any letter from the Employer to the relevant authorities, for obtaining special permit. Any Bidder, who wishes to undertake any separate site visit may be pursuant to Clause 7 undertake the same, by giving at least 3 days' notice to the Employer along with the identification and other details of the bidder's representative, if Bidder requires any letter from the Employer to the relevant authorities for obtaining special permit. However, requests for site visits shall be entertained by the Employer, if the same are received by the Employer at least 7 days prior to the deadline of Bid submission.

18.2 The purpose of the meeting will be to clarify issues and to answer questions on any matter that may be raised at that stage.

18.3 The bidder is requested to submit any query in writing, to reach the Employer not later than as per BDS.

18.4 Proceedings of the meeting, including the text of the questions raised and the responses given, will be transmitted without delay to all purchasers of the bidding documents. Any modification of the bidding documents listed in Sub-Clause 8.1 which may become necessary as a result of the pre-bid meeting shall be made by the Employer exclusively through the issue of an Addendum pursuant to Clause 10 and not through the minutes of the pre-bid meeting.

18.5 Bidders are advised to attend the pre-bid meeting. However, non-attendance at the pre-bid meeting will not be a cause for disqualification of a bidder.

18.6 All costs associated with attending the pre-bid meeting and / or site visits shall be borne by the Bidder. It shall be noted that the Employer's issuance of letter for obtaining permits shall not be construed as Employer's commitment or obligation to arrange for the permits from the relevant Authorities, especially in the absence of any statutory requirements not being met by the Bidder.

19. Format and Signing of Bid

19.1 The bidder shall prepare ONE original and ONE copies of the Bid documents as described in Clause 12 of these Instructions to Bidders, and clearly marked "ORIGINAL" and "COPY". In the event of discrepancy between them, the original shall prevail.

19.2 The original and all copies of the bids shall be typed or written in indelible ink (in the case of copies, photostats are also acceptable) and shall be signed by a person or persons duly authorized to sign on behalf of the bidder, pursuant to Sub-Clause 4.1 (a) or 4.2 (b), as the case may be.

19.3 The bids shall contain no alterations, omission or additions, except those to comply with instructions issued by the Employer, or as necessary to correct errors made by the bidder, in which case such corrections shall be initialed by the person or persons signing the bid.

D. SUBMISSION OF BIDS

20. Sealing and Marking of Bids

20.1 The bidder shall seal the original and each copy of the bid in an inner and an outer envelope, duly marking the envelopes as " BID - ORIGINAL " and " BID - COPY".

20.2 The inner and outer envelopes shall

(a) be addressed to the Employer at the address indicated in BDS.

(b) bear the identification as indicated in BDS:

20.3 In addition to the identification required in Sub-Clause 20.2, the inner envelope shall indicate the name and address of the bidder to enable the bid to be returned unopened in case it is declared "late" pursuant to Clause 22.

20.4 If the outer envelope is not sealed and marked as above, the Employer will assume no responsibility for the misplacement or premature opening of the bid.

21. Deadline for Submission of Bids

21.1 Bids must be received by the Employer at the address specified as per ITB clause 20.2 (a) above no later than the date and time as indicated in BDS.

21.2 The Employer may, at his discretion, extend the deadline for submission of bids by issuing an addendum in accordance with Clause 10 in which case all rights and obligations of the Employer and the bidders previously subject to the original deadline will thereafter be subject to the deadline as extended.

22. Late Bids

22.1 Any bid received by the Employer after the deadline for submission of bids prescribed in Clause 21 will be rejected and returned unopened to the bidder.

23. Modification and With-drawl of Bids

23.1 The bidder may modify or withdraw its bid after bid submission, provided that written notice of the modification or withdrawal is received by the Employer prior to the deadline for submission of bids.

23.2 The bidder's modification or withdrawal notice shall be prepared, sealed, marked and delivered in accordance with the provisions of Clause 20, with the outer and inner envelopes additionally marked "MODIFICATION" or "WITHDRAWAL", as appropriate. A withdrawal notice may also be sent by fax but must be followed by a signed confirmation copy.

23.3 No bid may be modified/withdrawn by the bidder after the deadline for submission of bids.

23.4 Withdrawal of a bid during the interval between the deadline for submission of bids and the expiration of the period of bid validity specified in the Form of Bid may result in the forfeiture of the bid security pursuant to Clause 16.

E. BID OPENING AND EVALUATION

24. Bid Opening – Opening of Bids

24.1 The Employer will open the bids, including technical modifications made pursuant to Clause 23, in the presence of bidders' representatives who choose to attend, at the time, date and in the place specified in the BDS. The bidders' representatives who are present shall sign an attendance sheet evidencing their attendance.

24.2 Envelopes marked "WITHDRAWAL" shall be opened and read out first. Bids for which an acceptable notice of withdrawal has been submitted pursuant to Clause 23 shall not be opened.

24.3 The bidders' names, technical bid modifications and withdrawals, the presence or absence of bid security and Integrity Pact, the bid prices, the total amount of each, any discount and such other details as the Employer may consider appropriate, will be announced and recorded by the Employer at the opening. The bidder's representatives will be required to sign the record.

24.4 The Employer shall prepare, besides the record of bid opening, minutes of the bid opening, including the information disclosed to those present in accordance with Sub-Clause 24.3.

25. Process to be Confidential

25.1 Information relating to the examination, clarification, evaluation and comparison of bids and

recommendations for the award of a contract shall not be disclosed to bidders or any other persons not officially concerned with such process until the award to the successful bidder has been announced. Any effort by a bidder to influence the Employer's processing of bids or award decisions may result in the rejection of the bidder's bid.

26. **Clarification of Bids**

26.1 To assist in the examination, evaluation and comparison of bids, the Employer may, at its discretion, ask any bidder for clarification of its bid, including but not limited to (a) during evaluation of Technical aspects any information on the technical data/information provided, qualifying requirements and/or deviations taken by the Bidder or any other clarification deemed fit by the Employer and (b) during evaluation of Prices breakdowns of unit rates or any other clarifications deemed fit by the Employer. The request for clarification and the response shall be in writing or by fax, but no change in the price or substance of the bid shall be sought, offered or permitted except as required to confirm the correction of arithmetic errors discovered by the Employer in the evaluation of the bids in accordance with Clause 28. Also seeking of any clarifications shall not be construed as the Bidder having met all/any qualification requirements and the Employer's seeking such clarifications is without prejudice to the Employer's right to reject Bids which are not substantially responsive at the time of original Bid submission.

27. **Preliminary Examination of Bids and Determination of Responsiveness**

27.1 Prior to the detailed evaluation of bids (during evaluation of technical Bids as well as the Financial Bids as appropriate), the Employer will determine whether each bid (i) meets the eligibility criteria; (ii) has been properly signed; (iii) is accompanied by the required securities; (iv) is substantially responsive to the requirements of the bidding documents; and (v) provides any clarification and/or substantiation that the Employer may require pursuant to Clause 26.

27.2 A responsive bid is one which conforms to the terms, conditions and specifications of the bidding documents, without material deviation or reservation. A material deviation or reservation is one (i) which affects in any substantial way the scope, quality or performance of the Works; (ii) which limits in any substantial way, inconsistent with the bidding documents, the Employer's rights or

the bidder's obligations under the Contract; or (iii) whose rectification would affect unfairly the competitive position of other bidders presenting substantially responsive bids.

27.3 If a bid is not responsive, it will be rejected by the Employer, and may not subsequently be made responsive by correction or withdrawal of the nonconforming deviation or reservation.

28. **Correction of Errors**

28.1 Bids determined to be substantially responsive will be checked by the Employer for any arithmetic errors. Arithmetic errors will be rectified on the following basis. If there is a discrepancy between the unit rate and the total cost per item that is obtained by multiplying the unit rate and quantity, the unit rate shall prevail and the total cost per item will be corrected unless in the opinion of the Employer there is an obvious misplacement of the decimal point in the unit rate, in which case the total cost per item as quoted will govern and the unit rate corrected. If there is a discrepancy between the total bid amount and the sum of total costs per item, the sum of the total costs per item shall prevail and the total bid amount will be corrected.

28.2 The amount stated in the Form of Price Bid will be adjusted by the Employer in accordance with the above procedure for the correction of errors and, shall be considered as binding upon the bidder. If the bidder does not accept the corrected amount of bid, its bid will be rejected, and the bid security may be forfeited in accordance with Sub-Clause 16.6 (b).

29. **Evaluation and Comparison of Bids**

29.1 The Employer will evaluate and compare only the bids determined to be responsive in accordance with Clause 27.

29.2 In evaluating the bids, the Employer will determine for each bid the Evaluated Bid Price separately for Package A and Package B by adjusting the Bid Price as follows:

(a) making any correction for errors pursuant to Clause 28;

(b) excluding Provisional Sums and the provision, if any, for Contingencies in the Summary Bill of Quantities, but including Daywork, where priced competitively;

(c) making an appropriate adjustment for any other acceptable variations, deviations or alternative offers submitted in accordance with Clause 17; and

(d) applying any discounts offered by the bidder for the award.

29.3 The Employer reserves the right to accept or reject any variation or deviations. Variations and other factors which are in excess of the requirements of the bidding documents or otherwise result in the accrual of unsolicited benefits to the Employer shall not be taken into account in bid evaluation.

29.4 The estimated effect of the price adjustment provisions of the Conditions of Contract, applied over the period of execution of the Contract, shall not be taken into account in bid evaluation.

29.5 If the bid of the successful bidder is seriously unbalanced in relation to the Engineer's estimate of the cost of work to be performed under the Contract, the Employer may require the bidder to produce detailed price analyses for any or all items of the Bill of Quantities, to demonstrate the internal consistency of those prices with the construction methods and schedule proposed. After evaluation of the price analyses, the Employer may require that the amount of the performance security set forth in Clause 34 be increased at the expense of the successful bidder to a level sufficient to protect the Employer against financial loss in the event of default of the successful bidder under the Contract.

F. AWARD OF CONTRACT

30. **Award**

30.1 Subject to Clause 31, the Employer will award the Contract to the bidder whose bid has been determined to be substantially responsive to the bidding documents and who has offered the Lowest Evaluated Bid Price for Package A and Package B, respectively, provided that such bidder has been determined to be (i) eligible in accordance with the provisions of Sub-Clause 2.1; and (ii) qualified in accordance with the provisions of Clause 4.

31. **Employer's**

31.1 Bids will be rejected if:

Right to Accept any Bid and to Reject any or all Bids

a) Any conditional bids other than those offering conditional discounts pursuant to Clause 29.2 (d)

b) Bids that do not comply with completion time.

31.2 Notwithstanding Clause 30, the Employer reserves the right to accept or reject any bid, and to annul the bidding process and reject all bids, at any time prior to award of Contract, without thereby incurring any liability to the affected bidder or bidders or any obligation to inform the affected bidder or bidders of the grounds for the Employer's action.

32. **Notification of Award**

32.1 Prior to expiration of the period of bid validity prescribed by the Employer, the Employer will notify the successful bidder through letter (hereinafter called the "Letter of Acceptance") that its bid has been accepted. This Letter of Acceptance may also seek for pre-award discussions.

32.2 The notification of award through Letter of Acceptance will constitute the formation of the Contract.

32.3 Upon the furnishing of a performance security by the successful bidder, the Employer will promptly notify the other bidders that their bids have been unsuccessful.

33. **Signing of Agreement**

33.1 At the same time that the Employer notifies the successful bidder that its bid has been accepted. The Employer will intimate the date of signing of the agreement to the Bidder.

33.2 The Agreement shall be signed within twenty eight (28) days of receipt of Letter of Acceptance from the Employer.

34. **Performance Security**

34.1 Within twenty eight (28) days of receipt of the Letter of Acceptance from the Employer, the successful bidder shall furnish to the Employer a performance security in an amount of ten (10) percent of the Contract Price in accordance with the Conditions of Contract. The form of performance security provided in Section 8 of the bidding documents shall be used.

Performance Security, provided by the successful bidder, shall be from a Bank/Financial Institution in Bhutan.

34.2 Failure of the successful bidder to comply with the requirements of Clauses 33 or 34 shall constitute sufficient grounds for the annulment of the award and forfeiture of the bid security.

35. Fraud & Corruption

35.1 It is Royal Government of Bhutan's (RGoB) policy to require that Employers, Bidders, Suppliers, Contractors and their Subcontractors observe the highest standards of ethics during the procurement and execution of contracts. In pursuance to this policy the Employer/RGoB:

(a) defines, for the purposes of this provision, the terms set forth below as:

(i) "corrupt practice" is the offering, giving, receiving or soliciting, directly or indirectly, of anything of value to influence improperly the actions of another party;

(ii) "fraudulent practice" is any intentional act or omission, including a misrepresentation, that knowingly or recklessly misleads, or attempts to mislead, a party to obtain a financial or other benefit or to avoid an obligation;

(iii) "collusive practice" is an arrangement between two or more parties designed to achieve an improper purpose, including to influence improperly the actions of another party'

(iv) "coercive practice" is impairing or harming, or threatening to impair or harm, directly or indirectly, any party or the property of the party to influence improperly the action of a party;

(v) "obstructive practice" is deliberately destroying, falsifying, altering or concealing of evidence material to the investigation or making false statements to investigators in order to materially impede any investigation into allegations of a corrupt, fraudulent,

coercive or collusive practice; and/or threatening, harassing or intimidating any party to prevent it from disclosing its knowledge of matters relevant to investigation or from pursuing the investigation; or acts intended to materially impede the exercise of the inspection and audit rights of the Employer or any organization or person appointed by the Employer.

(b) will reject a proposal for award if it determines that the bidder recommended for award has, directly or through an agent, engaged in corrupt, fraudulent, collusive, coercive or obstructive practices in competing for the contract in question.

(c) will sanction a firm or an individual, including declaring them ineligible, either indefinitely or for a stated period of time, to be awarded a contract if it at any time determines that they have, directly or through an agent, engaged in corrupt, fraudulent, collusive, coercive or obstructive practices in competing for, or in executing contract;

(d) will have the right to require that a provision be included in the bidding documents and in contracts, requiring bidders, suppliers, contractors and their subcontractors to permit the Employer, any organization or person appointed by the Employer and/or any relevant RGoB agency to inspect their accounts and records and other documents relating to the bid submission and contract performance and to have them audited by auditors appointed by the Employer;

(e) requires that bidders, as a condition to admission to eligibility, execute and attach to their bids an Integrity Pact Statement in the form provided in the Instructions to bidders.

(f) will report any case of corrupt, fraudulent, collusive, coercive or obstructive practice to relevant RGoB agencies, including but not limited to the Anti-Corruption Commission (ACC) of Bhutan, for necessary action in

accordance with the statutes and provisions of the relevant agency.

BIDDING DATA SHEET (BDS)

A. General	
ITB 1.1	Supply, Construction, Testing & Commissioning of a 66kV Double Circuit transmission line from Semtokha substation to Dechencholing substation. Tender no.: BPC/C&PD/CMS/TENDER-2026/01
ITB 1.2	The contract period is **12 months**.
ITB 4.2	**Permitted.**
ITB 4.5	In addition to the requirements specified in ITB.4.5 a) & b), the following qualifying requirement shall be met by the Bidder to be responsive to the bidding document: A. Experience and Technical Capability **General** The EPC bidder shall have experience of supply, erection, testing and commissioning of at least 50 km of 66kV or above voltages in a single contract in hilly terrain in the last five (5) years. **Specific** i. The EPC bidder shall have experience of Aluminium Conductor Composite Core (ACCC) conductor stringing at least 20km in hilly terrain. ii. The EPC bidder shall obtain manufacturing authorization from Original Equipment Manufacturer (OEM) for the offered ACCC conductor meeting the following : a. Conductor manufacturers of offered ACCC conductors with carbon fibre composite core shall have at least 100 kilometres and 50 kilometres supply record outside the country of manufacture. It shall be in satisfactory operation in the field for at least 5 years period as on the date of bid closing. ACCC conductor manufacturers shall have design, manufacturing and supply experience of at least 10 years. b. Carbon fibre composite core manufacturers shall have design, manufacturing and supply experience of at least 10

years including over 45,000 km of supply record out of which at least 21,500 km shall be outside the country of manufacture.

c. Hardware fitting manufacturers for ACCC conductors shall have at least 10 years of manufacturing experience of transmission line fittings with 70kN or higher rating including minimum manufacturing experience of at least 5 years for the proposed conductor type and the same should have been satisfactory operation for a minimum period of 5 years as on the date of bid closing. The offered type dead end assembly must include collets, collet housing type hardware arrangement and should have been in satisfactory operation for at least 5 years.

iii. Bidder shall have assured access to supply of Hardware Fittings and Accessories for ACCC conductor (equivalent to ACSR Wolf) and XLPE Cables from qualified manufacturers meeting the minimum requirements specified herein, and shall demonstrate that, based on existing commitments, these materials will be available for use in the proposed Contract.

iv. All materials shall be procured from BPC approved vendor lists that meet the respective qualifying requirements. The Contractor shall finalize their sub-vendors/manufacturers for the supply of various line materials from among the qualified firms within **one** month from the date of issuance of the Letter of Award (LoA) and shall submit documents demonstrating compliance with the stipulated qualification requirements.

v. The bidder has adequate personnel (Project Manager, Electrical/Civil engineer, Survey engineer, Environmental specialist including Health & safety specialist) in their pay roll.

Sl. No.	Position	General Qualifications	Work Experience
1	Project Manager	Min. Bachelors	10+ years
2	Project Engineer	Min. Bachelors in Civil/Electrical Engineering	7+ years
3	Survey Engineer	Min. Diploma in Survey Engineering	5+ years
4	Environmental specialist	Min. Bachelors	5+ years
5	Health & safety specialist	Min. Bachelors	5+ years

	B. Financial Capacity i. The bidder should have an average annual turnover (defined as billing for works in progress and completed) over last three (3) years of **Nu 241.74 million.** ii. The Bidder should also demonstrate that he/she has access to, or available, liquid assets unencumbered real assets, line of credit and other financial means (inter alia including a Guarantee or an undertaking from a Bank or Financier) sufficient to meet the construction cash flow for a period of three months, estimated as **Nu 40.29 million** Or equivalent; net of the Bidder's commitments for other contract. The bidder not meeting the qualifications criteria above shall be ground for disqualifications of the bids.
B. Bidding Documents	
ITB 8.1	The sections are arranged as per the following volumes. **Volume I: Section 1, 2, 3, 4, 5, 6, 7, 8 and 9** **Volume II: Section 4 – Technical Specification** **Volume III:** Preamble to Price Schedule and Schedule of Prices (including Bill of Quantities)
ITB 9.1	The Employer's address for clarification is: **Chief Manager** **Contracts Management Section** **Construction Division** **Construction & Procurement Department** **Bhutan Power Corporation Limited** **Thimphu, Bhutan** **Telephone: +975-2-322046 / 00975 17150540 / 17615064** **Email: sangay.lungten@bpc.bt / cmsection@bpc.bt**
ITB 9.1	The Bidder shall submit the following additional documents in its Technical Bid: 1. Signed Integrity Pact form

C. Preparation of Bids	
ITB 13.5	The prices quoted by the Bidder shall: Not be adjustable.
ITB 15.1	The Bids shall remain valid till **May 06, 2026**.
ITB 16.1 & 16.2	The Bidder shall furnish a bid security amounting to **Nu 4.03 million**, which shall be valid up to **June 05, 2026**, in favor of: ***General Manager, Finance & Account Division, Bhutan Power Corporation Limited, Thimphu.***
ITB 18.1	Alternative Bids will not be permitted.
ITB 18.1	Pre-bid Meeting shall be held on **January 29, 2026, BPC office** or on any other dates /address as amended. Bidders wishing to visit site sites can be done on **January 28, 2026**.
ITB 18.3	The Employer will respond to any request for clarification, which it receives on or before **January 30, 2026.**
D. Submission of Bids	
ITB 21.1	Bid should be submit before **1400 hours on February 05, 2026.**
E. Bid Opening and Evaluation	
ITB 24.1	The bid opening (technical bids) shall be conducted at **14:30 hours** on **February 05, 2026** in the Conference Hall of BPC, Thimphu. After completion of the technical evaluation, the Price Bids of only those bidders who are found technically responsive shall be opened on a date and time to be notified to the technically qualified bidders. The Price Bids of bidders found technically non-responsive shall not be opened, and such bidders shall be duly notified of their technical disqualification.

SECTION 2

CONDITIONS OF CONTRACT

PART I – GENERAL CONDITIONS OF CONTRACTS

FEDERATION INTERNATIONALE DES INGENIEURS-CONSEILS

CONDITIONS OF CONTRACT FOR WORKS OF CIVIL ENGINEERING CONSTRUCTION

PART I GENERAL CONDITIONS
WITH FORMS OF TENDER AND AGREEMENT

PART II CONDITIONS OF PARTICULAR APPLICATION
WITH GUIDELINES FOR PREPARATION OF PART II CLAUSES

FOURTH EDITION 1987

Reprinted 1988 with editorial amendments

Reprinted 1992 with further amendments

FEDERATION INTERNATIONALE DES INGENIEURS-CONSEILS

CONDITIONS OF CONTRACT FOR WORKS OF CIVIL ENGINEERING CONSTRUCTION

PART I GENERAL CONDITIONS

WITH FORMS OF TENDER AND AGREEMENT

FOURTH EDITION 1987
Reprinted 1988 with editorial amendments
Reprinted 1992 with further amendments

FOREWORD

The terms of the Fourth Edition of the Conditions of Contract for Works of Civil Engineering Construction have been prepared by the Fédération Internationale des Ingénieurs Conseils (FIDIC) and are recommended for general use for the purpose of construction of such works where tenders are invited on an international basis. The Conditions, subject to minor modifications, are also suitable for use on domestic contracts.

The version in English of the Conditions is considered by FIDIC as the official and authentic text for the purpose of translation.

In the preparation of the Conditions it was recognised that while there are numerous Clauses which will be generally applicable there are some Clauses which must necessarily vary to take account of the circumstances and locality of the Works. The Clauses of general application have been grouped together in this document and are referred to as Part I – General Conditions. They have been printed in a form which will facilitate their inclusion as printed in the contract documents normally prepared.

The General Conditions are linked with the Conditions of Particular Application, referred to as Part II, by the corresponding numbering of the Clauses, so that Parts I and II together comprise the Conditions governing the rights and obligations of the parties.

Part II must be specially drafted to suit each individual Contract.

When dredging and certain types of reclamation work are involved special consideration must be given to Part II.

To assist in the preparation of Part II explanatory material and example clauses are published with the Conditions in a separately bound document entitled "Conditions of Contract for Works of Civil Engineering Construction, Part II – Conditions of Particular Application, with Guidelines for preparation of Part II Clauses, Fourth Edition".

FIDIC has published a "Guide to the Use of FIDIC Conditions of Contract for Works of Civil Engineering Construction" which includes comments on the provisions of the Fourth Edition of the Conditions. Users of the Fourth Edition may find it helpful to refer to this Guide.

It may also be helpful for users to refer to other FIDIC publications, such as:

Tendering Procedure (First Edition 1982)
Construction, Insurance and Law (1986)

FIDIC gratefully acknowledges the suggestions and comments it has received during the preparation of this edition from European International Contractors (EIC) as mandatory of Confederation of International Contractors Associations (CICA) with participation of Associated General Contractors of America (AGC).

© FIDIC 1987

CONTENTS

PART I: GENERAL CONDITIONS

Definitions and Interpretation

1.1	Definitions	1
1.2	Headings and Marginal Notes	2
1.3	Interpretation	2
1.4	Singular and Plural	2
1.5	Notices, Consents, Approvals, Certificates and Determinations	3

Engineer and Engineer's Representative

2.1	Engineer's Duties and Authority	3
2.2	Engineer's Representative	3
2.3	Engineer's Authority to Delegate	3
2.4	Appointment of Assistants	3
2.5	Instructions in Writing	3
2.6	Engineer to Act Impartially	4

Assignment and Subcontracting

3.1	Assignment of Contract	4
4.1	Subcontracting	4
4.2	Assignment of Subcontractors' Obligations	4

Contract Documents

5.1	Language/s and Law	4
5.2	Priority of Contract Documents	5
6.1	Custody and Supply of Drawings and Documents	5
6.2	One Copy of Drawings to be Kept on Site	5
6.3	Disruption of Progress	5
6.4	Delays and Cost of Delay of Drawings	5
6.5	Failure by Contractor to Submit Drawings	5
7.1	Supplementary Drawings and Instructions	6
7.2	Permanent Works Designed by Contractor	6
7.3	Responsibility Unaffected by Approval	6

General Obligations

8.1	Contractor's General Responsibilities	6
8.2	Site Operations and Methods of Construction	6
9.1	Contract Agreement	6
10.1	Performance Security	6
10.2	Period of Validity of Performance Security	7
10.3	Claims under Performance Security	7
11.1	Inspection of Site	7
12.1	Sufficiency of Tender	7
12.2	Not Foreseeable Physical Obstructions or Conditions	7
13.1	Work to be in Accordance with Contract	8
14.1	Programme to be Submitted	8
14.2	Revised Programme	8
14.3	Cash Flow Estimate to be Submitted	8
14.4	Contractor not Relieved of Duties or Responsibilities	8
15.1	Contractor's Superintendence	8

© FIDIC 1987

16.1	Contractor's Employees	8
16.2	Engineer at Liberty to Object	8
17.1	Setting-out	9
18.1	Boreholes and Exploratory Excavation	9
19.1	Safety, Security and Protection of the Environment	9
19.2	Employer's Responsibilities	9
20.1	Care of Works	9
20.2	Responsibility to Rectify Loss or Damage	10
20.3	Loss or Damage Due to Employer's Risks	10
20.4	Employer's Risks	10
21.1	Insurance of Works and Contractor's Equipment	10
21.2	Scope of Cover	11
21.3	Responsibility for Amounts not Recovered	11
21.4	Exclusions	11
22.1	Damage to Persons and Property	11
22.2	Exceptions	11
22.3	Indemnity by Employer	12
23.1	Third Party Insurance (including Employer's Property)	12
23.2	Minimum Amount of Insurance	12
23.3	Cross Liabilities	12
24.1	Accident or Injury to Workmen	12
24.2	Insurance Against Accident to Workmen	12
25.1	Evidence and Terms of Insurances	12
25.2	Adequacy of Insurances	12
25.3	Remedy on Contractor's Failure to Insure	12
25.4	Compliance with Policy Conditions	12
26.1	Compliance with Statutes, Regulations	13
27.1	Fossils	13
28.1	Patent Rights	13
28.2	Royalties	13
29.1	Interference with Traffic and Adjoining Properties	13
30.1	Avoidance of Damage to Roads	14
30.2	Transport of Contractor's Equipment or Temporary Works	14
30.3	Transport of Materials or Plant	14
30.4	Waterborne Traffic	14
31.1	Opportunities for Other Contractors	14
31.2	Facilities for Other Contractors	14
32.1	Contractor to Keep Site Clear	15
33.1	Clearance of Site on Completion	15

Labour

34.1	Engagement of Staff and Labour	15
35.1	Returns of Labour and Contractor's Equipment	15

Materials, Plant and Workmanship

36.1	Quality of Materials, Plant and Workmanship	15
36.2	Cost of Samples	15
36.3	Cost of Tests	15
36.4	Cost of Tests not Provided for	16
36.5	Engineer's Determination where Tests not Provided for	16
37.1	Inspection of Operations	16
37.2	Inspection and Testing	16
37.3	Dates for Inspection and Testing	16
37.4	Rejection	16
37.5	Independent Inspection	17
38.1	Examination of Work before Covering up	17

© FIDIC 1987

38.2 Uncovering and Making Openings 17
39.1 Removal of Improper Work, Materials or Plant 17
39.2 Default of Contractor in Compliance 17

Suspension

40.1 Suspension of Work 17
40.2 Engineer's Determination following Suspension 18
40.3 Suspension lasting more than 84 Days 18

Commencement and Delays

41.1 Commencement of Works 18
42.1 Possession of Site and Access Thereto 18
42.2 Failure to Give Possession 19
42.3 Rights of Way and Facilities 19
43.1 Time for Completion 19
44.1 Extension of Time for Completion 19
44.2 Contractor to Provide Notification and Detailed Particulars 19
44.3 Interim Determination of Extension 19
45.1 Restriction on Working Hours 20
46.1 Rate of Progress 20
47.1 Liquidated Damages for Delay 20
47.2 Reduction of Liquidated Damages 20
48.1 Taking-Over Certificate 21
48.2 Taking-Over of Sections or Parts 21
48.3 Substantial Completion of Parts 21
48.4 Surfaces Requiring Reinstatement 21

Defects Liability

49.1 Defects Liability Period 21
49.2 Completion of Outstanding Work and Remedying Defects 22
49.3 Cost of Remedying Defects 22
49.4 Contractor's Failure to Carry Out Instructions 22
50.1 Contractor to Search 22

Alterations, Additions and Omissions

51.1 Variations 22
51.2 Instructions for Variations 23
52.1 Valuation of Variations 23
52.2 Power of Engineer to Fix Rates 23
52.3 Variations Exceeding 15 percent 23
52.4 Daywork 24

Procedure for Claims

53.1 Notice of Claims 24
53.2 Contemporary Records 24
53.3 Substantiation of Claims 25
53.4 Failure to Comply 25
53.5 Payment of Claims 25

Contractor's Equipment, Temporary Works and Materials

54.1 Contractor's Equipment, Temporary Works and Materials; Exclusive Use for the Works 25
54.2 Employer not Liable for Damage 25
54.3 Customs Clearance 25

© FIDIC 1987

54.4	Re-export of Contractor's Equipment	25
54.5	Conditions of Hire of Contractor's Equipment	26
54.6	Costs for the Purpose of Clause 63	26
54.7	Incorporation of Clause in Subcontracts	26
54.8	Approval of Materials not Implied	26

Measurement

55.1	Quantities	26
56.1	Works to be Measured	26
57.1	Method of Measurement	27
57.2	Breakdown of Lump Sum Items	27

Provisional Sums

58.1	Definition of "Provisional Sum"	27
58.2	Use of Provisional Sums	27
58.3	Production of Vouchers	27

Nominated Subcontractors

59.1	Definition of "Nominated Subcontractors"	27
59.2	Nominated Subcontractors; Objection to Nomination	27
59.3	Design Requirements to be Expressly Stated	28
59.4	Payments to Nominated Subcontractors	28
59.5	Certification of Payments to Nominated Subcontractors	28

Certificates and Payment

60.1	Monthly Statements	29
60.2	Monthly Payments	29
60.3	Payment of Retention Money	29
60.4	Correction of Certificates	29
60.5	Statement at Completion	30
60.6	Final Statement	30
60.7	Discharge	30
60.8	Final Payment Certificate	30
60.9	Cessation of Employer's Liability	30
60.10	Time for Payment	31
61.1	Approval only by Defects Liability Certificate	31
62.1	Defects Liability Certificate	31
62.2	Unfulfilled Obligations	31

Remedies

63.1	Default of Contractor	31
63.2	Valuation at Date of Termination	32
63 3	Payment after Termination	32
63.4	Assignment of Benefit of Agreement	32
64.1	Urgent Remedial Work	32

Special Risks

65.1	No Liability for Special Risks	33
65.2	Special Risks	33
65.3	Damage to Works by Special Risks	33
65.4	Projectile, Missile	33
65.5	Increased Costs arising from Special Risks	33
65.6	Outbreak of War	33
65.7	Removal of Contractor's Equipment on Termination	34
65.8	Payment if Contract Terminated	34

© FIDIC 1987

Release from Performance

66.1 Payment in Event of Release from Performance 35

Settlement of Disputes

67.1 Engineer's Decision 35
67.2 Amicable Settlement 35
67.3 Arbitration 36
67.4 Failure to Comply with Engineer's Decision 36

Notices

68.1 Notice to Contractor 36
68.2 Notice to Employer and Engineer 36
68.3 Change of Address 36

Default of Employer

69.1 Default of Employer 36
69.2 Removal of Contractor's Equipment 37
69.3 Payment on Termination 37
69.4 Contractor's Entitlement to Suspend Work 37
69.5 Resumption of Work 37

Changes in Cost and Legislation

70.1 Increase or Decrease of Cost 37
70.2 Subsequent Legislation 37

Currency and Rates of Exchange

71.1 Currency Restrictions 38
72.1 Rates of Exchange 38
72.2 Currency Proportions 38
72.3 Currencies of Payment for Provisional Sums 38

REFERENCE TO PART II
INDEX
TENDER
AGREEMENT
EDITORIAL AMENDMENTS IN 1988
FURTHER AMENDMENTS IN 1992

© FIDIC 1987

PART I - GENERAL CONDITIONS

Definitions and Interpretation

Definitions **1.1** In the Contract (as hereinafter defined) the following words and expressions shall have the meanings hereby assigned to them, except where the context otherwise requires:

(a) (i) "Employer" means the person named as such in Part II of these Conditions and the legal successors in title to such person, but not (except with the consent of the Contractor) any assignee of such person.

(ii) "Contractor" means the person whose tender has been accepted by the Employer and the legal successors in title to such person, but not (except with the consent of the Employer) any assignee of such person.

(iii) "Subcontractor" means any person named in the Contract as a Subcontractor for a part of the Works or any person to whom a part of the Works has been subcontracted with the consent of the Engineer and the legal successors in title to such person, but not any assignee of any such person.

(iv) "Engineer" means the person appointed by the Employer to act as Engineer for the purposes of the Contract and named as such in Part II of these Conditions.

(v) "Engineer's Representative" means a person appointed from time to time by the Engineer under Sub-Clause 2.2.

(b) (i) "Contract" means these Conditions (Parts I and II), the Specification, the Drawings, the Bill of Quantities, the Tender, the Letter of Acceptance, the Contract Agreement (if completed) and such further documents as may be expressly incorporated in the Letter of Acceptance or Contract Agreement (if completed).

(ii) "Specification" means the specification of the Works included in the Contract and any modification thereof or addition thereto made under Clause 51 or submitted by the Contractor and approved by the Engineer.

(iii) "Drawings" means all drawings, calculations and technical information of a like nature provided by the Engineer to the Contractor under the Contract and all drawings, calculations, samples, patterns, models, operation and maintenance manuals and other technical information of a like nature submitted by the Contractor and approved by the Engineer.

(iv) "Bill of Quantities" means the priced and completed bill of quantities forming part of the Tender.

(v) "Tender" means the Contractor's priced offer to the Employer for the execution and completion of the Works and the remedying of any defects therein in accordance with the provisions of the Contract, as accepted by the Letter of Acceptance.

(vi) "Letter of Acceptance" means the formal acceptance by the Employer of the Tender.

(vii) "Contract Agreement" means the contract agreement (if any) referred to in Sub-Clause 9.1.

(viii) "Appendix to Tender" means the appendix comprised in the form of Tender annexed to these Conditions.

(c) (i) "Commencement Date" means the date upon which the Contractor receives the notice to commence issued by the Engineer pursuant to Clause 41.

(ii) "Time for Completion" means the time for completing the execution of and passing the Tests on Completion of the Works or any Section or part thereof as stated in the Contract (or as extended under Clause 44) calculated from the Commencement Date.

© FIDIC 1987

(d) (i) "Tests on Completion" means the tests specified in the Contract or otherwise agreed by the Engineer and the Contractor which are to be made by the Contractor before the Works or any Section or part thereof are taken over by the Employer.

(ii) "Taking-Over Certificate" means a certificate issued pursuant to Clause 48.

(e) (i) "Contract Price" means the sum stated in the Letter of Acceptance as payable to the Contractor for the execution and completion of the Works and the remedying of any defects therein in accordance with the provisions of the Contract.

(ii) "Retention Money" means the aggregate of all monies retained by the Employer pursuant to Sub-Clause 60.2(a).

(iii) "Interim Payment Certificate" means any certificate of payment issued by the Engineer other than the Final Payment Certificate.

(iv) "Final Payment Certificate" means the certificate of payment issued by the Engineer pursuant to Sub-Clause 60.8.

(f) (i) "Works" means the Permanent Works and the Temporary Works or either of them as appropriate.

(ii) "Permanent Works" means the permanent works to be executed (including Plant) in accordance with the Contract.

(iii) "Temporary Works" means all temporary works of every kind (other than Contractor's Equipment) required in or about the execution and completion of the Works and the remedying of any defects therein.

(iv) "Plant" means machinery, apparatus and the like intended to form or forming part of the Permanent Works.

(v) "Contractor's Equipment" means all appliances and things of whatsoever nature (other than Temporary Works) required for the execution and completion of the Works and the remedying of any defects therein, but does not include Plant, materials or other things intended to form or forming part of the Permanent Works.

(vi) "Section" means a part of the Works specifically identified in the Contract as a Section.

(vii) "Site" means the places provided by the Employer where the Works are to be executed and any other places as may be specifically designated in the Contract as forming part of the Site.

(g) (i) "cost" means all expenditure properly incurred or to be incurred, whether on or off the Site, including overhead and other charges properly allocable thereto but does not include any allowance for profit.

(ii) "day" means calendar day.

(iii) "foreign currency" means a currency of a country other than that in which the Works are to be located.

(iv) "writing" means any hand-written, type-written, or printed communication, including telex, cable and facsimile transmission.

Headings and Marginal Notes

1.2 The headings and marginal notes in these Conditions shall not be deemed part thereof or be taken into consideration in the interpretation or construction thereof or of the Contract.

Interpretation

1.3 Words importing persons or parties shall include firms and corporations and any organisation having legal capacity.

Singular and Plural

1.4 Words importing the singular only also include the plural and vice versa where the context requires.

© FIDIC 1987

Notices, Consents, Approvals, Certificates and Determinations

1.5 Wherever in the Contract provision is made for the giving or issue of any notice, consent, approval, certificate or determination by any person, unless otherwise specified such notice, consent, approval, certificate or determination shall be in writing and the words "notify", "certify" or "determine" shall be construed accordingly. Any such consent, approval, certificate or determination shall not unreasonably be withheld or delayed.

Engineer and Engineer's Representative

Engineer's Duties and Authority

2. 1 (a) The Engineer shall carry out the duties specified in the Contract.

(b) The Engineer may exercise the authority specified in or necessarily to be implied from the Contract, provided, however, that if the Engineer is required, under the terms of his appointment by the Employer, to obtain the specific approval of the Employer before exercising any such authority, particulars of such requirements shall be set out in Part II of these Conditions. Provided further that any requisite approval shall be deemed to have been given by the Employer for any such authority exercised by the Engineer.

(c) Except as expressly stated in the Contract, the Engineer shall have no authority to relieve the Contractor of any of his obligations under the Contract.

Engineer's Representative

2.2 The Engineer's Representative shall be appointed by and be responsible to the Engineer and shall carry out such duties and exercise such authority as may be delegated to him by the Engineer under Sub-Clause 2.3.

Engineer's Authority to Delegate

2.3 The Engineer may from time to time delegate to the Engineer's Representative any of the duties and authorities vested in the Engineer and he may at any time revoke such delegation. Any such delegation or revocation shall be in writing and shall not take effect until a copy thereof has been delivered to the Employer and the Contractor.

Any communication given by the Engineer's Representative to the Contractor in accordance with such delegation shall have the same effect as though it had been given by the Engineer. Provided that:

(a) any failure of the Engineer's Representative to disapprove any work, materials or Plant shall not prejudice the authority of the Engineer to disapprove such work, materials or Plant and to give instructions for the rectification thereof; and

(b) if the Contractor questions any communication of the Engineer's Representative he may refer the matter to the Engineer who shall confirm, reverse or vary the contents of such communication.

Appointment of Assistants

2.4 The Engineer or the Engineer's Representative may appoint any number of persons to assist the Engineer's Representative in the carrying out of his duties under Sub-Clause 2.2. He shall notify to the Contractor the names, duties and scope of authority of such persons. Such assistants shall have no authority to issue any instructions to the Contractor save in so far as such instructions may be necessary to enable them to carry out their duties and to secure their acceptance of materials, Plant or workmanship as being in accordance with the Contract, and any instructions given by any of them for those purposes shall be deemed to have been given by the Engineer's Representative.

Instructions in Writing

2.5 Instructions given by the Engineer shall be in writing, provided that if for any reason the Engineer considers it necessary to give any such instruction orally, the Contractor shall comply with such instruction. Confirmation in writing of such oral instruction given by the Engineer, whether before or after the carrying out of the instruction, shall be deemed to be an instruction within the meaning of this Sub-Clause. Provided further that if the Contractor, within 7 days, confirms in writing to the Engineer any oral instruction of the Engineer and such confirmation is not contradicted in writing within 7 days by the Engineer, it shall be deemed to be an instruction of the Engineer.

© FIDIC 1987

The provisions of this Sub-Clause shall equally apply to instructions given by the Engineer's Representative and any assistants of the Engineer or the Engineer's Representative appointed pursuant to Sub-Clause 2.4.

Engineer to Act Impartially

2.6 Wherever, under the Contract, the Engineer is required to exercise his discretion by:

(a) giving his decision, opinion or consent,

(b) expressing his satisfaction or approval,

(c) determining value, or

(d) otherwise taking action which may affect the rights and obligations of the Employer or the Contractor

he shall exercise such discretion impartially within the terms of the Contract and having regard to all the circumstances. Any such decision, opinion, consent, expression of satisfaction, or approval, determination of value or action may be opened up, reviewed or revised as provided in Clause 67.

Assignment and Subcontracting

Assignment of Contract

3. 1 The Contractor shall not, without the prior consent of the Employer (which consent, notwithstanding the provisions of Sub-Clause 1.5, shall be at the sole discretion of the Employer), assign the Contract or any part thereof, or any benefit or interest therein or thereunder, otherwise than by:

(a) a charge in favour of the Contractor's bankers of any monies due or to become due under the Contract, or

(b) assignment to the Contractor's insurers (in cases where the insurers have discharged the Contractor's loss or liability) of the Contractor's right to obtain relief against any other party liable.

Subcontracting

4. 1 The Contractor shall not subcontract the whole of the Works. Except where otherwise provided by the Contract, the Contractor shall not subcontract any part of the Works without the prior consent of the Engineer. Any such consent shall not relieve the Contractor from any liability or obligation under the Contract and he shall be responsible for the acts, defaults and neglects of any Subcontractor, his agents, servants or workmen as fully as if they were the acts, defaults or neglects of the Contractor, his agents, servants or workmen.

Provided that the Contractor shall not be required to obtain such consent for:

(a) the provision of labour,

(b) the purchase of materials which are in accordance with the standards specified in the Contract, or

(c) the subcontracting of any part of the Works for which the Subcontractor is named in the Contract.

Assignment of Subcontractors' Obligations

4.2 In the event of a Subcontractor having undertaken towards the Contractor in respect of the work executed, or the goods, materials, Plant or services supplied by such Subcontractor, any continuing obligation extending for a period exceeding that of the Defects Liability Period under the Contract, the Contractor shall at any time, after the expiration of such Period, assign to the Employer, at the Employer's request and cost, the benefit of such obligation for the unexpired duration thereof.

Contract Documents

Language/s and Law

5. 1 There is stated in Part II of these Conditions:

(a) the language or languages in which the Contract documents shall be drawn up, and

(b) the country or state the law of which shall apply to the Contract and according to which the Contract shall be construed.

© FIDIC 1987

If the said documents are written in more than one language, the language according to which the Contract shall be construed and interpreted is also stated in Part II of these Conditions, being therein designated the "Ruling Language".

Priority of Contract Documents

5.2 The several documents forming the Contract are to be taken as mutually explanatory of one another, but in case of ambiguities or discrepancies the same shall be explained and adjusted by the Engineer who shall thereupon issue to the Contractor instructions thereon and in such event, unless otherwise provided in the Contract, the priority of the documents forming the Contract shall be as follows:

(1) The Contract Agreement (if completed);

(2) The Letter of Acceptance;

(3) The Tender;

(4) Part II of these Conditions;

(5) Part I of these Conditions; and

(6) Any other document forming part of the Contract.

Custody and Supply of Drawings and Documents

6.1 The Drawings shall remain in the sole custody of the Engineer, but two copies thereof shall be provided to the Contractor free of charge. The Contractor shall make at his own cost any further copies required by him. Unless it is strictly necessary for the purposes of the Contract, the Drawings, Specification and other documents provided by the Employer or the Engineer shall not, without the consent of the Engineer, be used or communicated to a third party by the Contractor. Upon issue of the Defects Liability Certificate, the Contractor shall return to the Engineer all Drawings, Specification and other documents provided under the Contract.

The Contractor shall supply to the Engineer four copies of all Drawings, Specification and other documents submitted by the Contractor and approved by the Engineer in accordance with Clause 7, together with a reproducible copy of any material which cannot be reproduced to an equal standard by photocopying. In addition the Contractor shall supply such further copies of such Drawings, Specification and other documents as the Engineer may request in writing for the use of the Employer, who shall pay the cost thereof.

One Copy of Drawings to be Kept on Site

6.2 One copy of the Drawings, provided to or supplied by the Contractor as aforesaid, shall be kept by the Contractor on the Site and the same shall at all reasonable times be available for inspection and use by the Engineer and by any other person authorised by the Engineer in writing.

Disruption of Progress

6.3 The Contractor shall give notice to the Engineer, with a copy to the Employer, whenever planning or execution of the Works is likely to be delayed or disrupted unless any further drawing or instruction is issued by the Engineer within a reasonable time. The notice shall include details of the drawing or instruction required and of why and by when it is required and of any delay or disruption likely to be suffered if it is late.

Delays and Cost of Delay of Drawings

6.4 If, by reason of any failure or inability of the Engineer to issue, within a time reasonable in all the circumstances, any drawing or instruction for which notice has been given by the Contractor in accordance with Sub-Clause 63, the Contractor suffers delay and/or incurs costs then the Engineer shall, after due consultation with the Employer and the Contractor, determine:

(a) any extension of time to which the Contractor is entitled under Clause 44, and

(b) the amount of such costs, which shall be added to the Contract Price,

and shall notify the Contractor accordingly, with a copy to the Employer.

Failure by Contractor to Submit Drawings

6.5 If the failure or inability of the Engineer to issue any drawings or instructions is caused in whole or in part by the failure of the Contractor to submit Drawings, Specification or other documents which he is required to submit under the Contract, the Engineer shall take such failure by the Contractor into account when making his determination pursuant to Sub-Clause 6.4.

© FIDIC 1987

Supplementary Drawings and Instructions

7.1 The Engineer shall have authority to issue to the Contractor, from time to time, such supplementary Drawings and instructions as shall be necessary for the purpose of the proper and adequate execution and completion of the Works and the remedying of any defects therein. The Contractor shall carry out and be bound by the same.

Permanent Works Designed by Contractor

7.2 Where the Contract expressly provides that part of the Permanent Works shall be designed by the Contractor, he shall submit to the Engineer, for approval:

(a) such drawings, specifications, calculations and other information as shall be necessary to satisfy the Engineer as to the suitability and adequacy of that design, and

(b) operation and maintenance manuals together with drawings of the Permanent Works as completed, in sufficient detail to enable the Employer to operate, maintain, dismantle, reassemble and adjust the Permanent Works incorporating that design. The Works shall not be considered to be completed for the purposes of taking over in accordance with Clause 48 until such operation and maintenance manuals, together with drawings on completion, have been submitted to and approved by the Engineer.

Responsibility Unaffected by Approval

7.3 Approval by the Engineer, in accordance with Sub-Clause 7.2, shall not relieve the Contractor of any of his responsibilities under the Contract.

General Obligations

Contractor's General Responsibilities

8.1 The Contractor shall, with due care and diligence, design (to the extent provided for by the Contract), execute and complete the Works and remedy any defects therein in accordance with the provisions of the Contract. The Contractor shall provide all superintendence, labour, materials, Plant, Contractor's Equipment and all other things, whether of a temporary or permanent nature, required in and for such design, execution, completion and remedying of any defects, so far as the necessity for providing the same is specified in or is reasonably to be inferred from the Contract.

The Contractor shall give prompt notice to the Engineer, with a copy to the Employer, of any error, omission, fault or other defect in the design of or Specification for the Works which he discovers when reviewing the Contract or executing the Works.

Site Operations and Methods of Construction

8.2 The Contractor shall take full responsibility for the adequacy, stability and safety of all Site operations and methods of construction. Provided that the Contractor shall not be responsible (except as stated hereunder or as may be otherwise agreed) for the design or specification of Permanent Works, or for the design or specification of any Temporary Works not prepared by the Contractor. Where the Contract expressly provides that part of the Permanent Works shall be designed by the Contractor, he shall be fully responsible for that part of such Works, notwithstanding any approval by the Engineer.

Contract Agreement

9.1 The Contractor shall, if called upon so to do, enter into and execute the Contract Agreement, to be prepared and completed at the cost of the Employer, in the form annexed to these Conditions with such modification as may be necessary.

Performance Security

10.1 If the Contract requires the Contractor to obtain security for his proper performance of the Contract, he shall obtain and provide to the Employer such security within 28 days after the receipt of the Letter of Acceptance, in the sum stated in the Appendix to Tender. When providing such security to the Employer, the Contractor shall notify the Engineer of so doing. Such security shall be in the form annexed to these Conditions or in such other form as may be agreed between the Employer and the Contractor. The institution providing such security shall be subject to the approval of the Employer. The cost of complying with the requirements of this Clause shall be borne by the Contractor, unless the Contract otherwise provides.

© FIDIC 1987

Period of Validity of Performance Security

10.2 The performance security shall be valid until the Contractor has executed and completed the Works and remedied any defects therein in accordance with the Contract. No claim shall be made against such security after the issue of the Defects Liability Certificate in accordance with Sub-Clause 62.1 and such security shall be returned to the Contractor within 14 days of the issue of the said Defects Liability Certificate.

Claims under Performance Security

10.3 Prior to making a claim under the performance security the Employer shall, in every case, notify the Contractor stating the nature of the default in respect of which the claim is to be made.

Inspection of Site

11.1 The Employer shall have made available to the Contractor, before the submission by the Contractor of the Tender, such data on hydrological and sub-surface conditions as have been obtained by or on behalf of the Employer from investigations undertaken relevant to the Works but the Contractor shall be responsible for his own interpretation thereof.

The Contractor shall be deemed to have inspected and examined the Site and its surroundings and information available in connection therewith and to have satisfied himself (so far as is practicable, having regard to considerations of cost and time) before submitting his Tender, as to:

(a) the form and nature thereof, including the sub-surface conditions,

(b) the hydrological and climatic conditions,

(c) the extent and nature of work and materials necessary for the execution and completion of the Works and the remedying of any defects therein, and

(d) the means of access to the Site and the accommodation he may require,

and, in general, shall be deemed to have obtained all necessary information, subject as above mentioned, as to risks, contingencies and all other circumstances which may influence or affect his Tender.

The Contractor shall be deemed to have based his Tender on the data made available by the Employer and on his own inspection and examination, all as aforementioned.

Sufficiency of Tender

12.1 The Contractor shall be deemed to have satisfied himself as to the correctness and sufficiency of the Tender and of the rates and prices stated in the Bill of Quantities, all of which shall, except insofar as it is otherwise provided in the Contract, cover all his obligations under the Contract (including those in respect of the supply of goods, materials, Plant or services or of contingencies for which there is a Provisional Sum) and all matters and things necessary for the proper execution and completion of the Works and the remedying of any defects therein.

Not Foreseeable Physical Obstructions or Conditions

12.2 If, however, during the execution of the Works the Contractor encounters physical obstructions or physical conditions, other than climatic conditions on the Site, which obstructions or conditions were, in his opinion, not foreseeable by an experienced contractor, the Contractor shall forthwith give notice thereof to the Engineer, with a copy to the Employer. On receipt of such notice, the Engineer shall, if in his opinion such obstructions or conditions could not have been reasonably foreseen by an experienced contractor, after due consultation with the Employer and the Contractor, determine:

(a) any extension of time to which the Contractor is entitled under Clause 44, and

(b) the amount of any costs which may have been incurred by the Contractor by reason of such obstructions or conditions having been encountered, which shall be added to the Contract Price,

and shall notify the Contractor accordingly, with a copy to the Employer. Such determination shall take account of any instruction which the Engineer may issue to the Contractor in connection therewith, and any proper and reasonable measures acceptable to the Engineer which the Contractor may take in the absence of specific instructions from the Engineer.

© FIDIC 1987

Work to be in Accordance with Contract **13.1** Unless it is legally or physically impossible, the Contractor shall execute and complete the Works and remedy any defects therein in strict accordance with the Contract to the satisfaction of the Engineer. The Contractor shall comply with and adhere strictly to the Engineer's instructions on any matter, whether mentioned in the Contract or not, touching or concerning the Works. The Contractor shall take instructions only from the Engineer (or his delegate).

Programme to be Submitted **14.1** The Contractor shall, within the time stated in Part II of these Conditions after the date of the Letter of Acceptance, submit to the Engineer for his consent a programme, in such form and detail as the Engineer shall reasonably prescribe, for the execution of the Works. The Contractor shall, whenever required by the Engineer, also provide in writing for his information a general description of the arrangements and methods which the Contractor proposes to adopt for the execution of the Works.

Revised Programme **14.2** If at any time it should appear to the Engineer that the actual progress of the Works does not conform to the programme to which consent has been given under Sub-Clause 14.1, the Contractor shall produce, at the request of the Engineer, a revised programme showing the modifications to such programme necessary to ensure completion of the Works within the Time for Completion.

Cash Flow Estimate to be Submitted **14.3** The Contractor shall, within the time stated in Part II of these Conditions after the date of the Letter of Acceptance, provide to the Engineer for his information a detailed cash flow estimate, in quarterly periods, of all payments to which the Contractor will be entitled under the Contract and the Contractor shall subsequently supply revised cash flow estimates at quarterly intervals, if required to do so by the Engineer.

Contractor not Relieved of Duties or Responsibilities **14.4** The submission to and consent by the Engineer of such programmes or the provision of such general descriptions or cash flow estimates shall not relieve the Contractor of any of his duties or responsibilities under the Contract.

Contractor's Superintendence **15. 1** The Contractor shall provide all necessary superintendence during the execution of the Works and as long thereafter as the Engineer may consider necessary for the proper fulfilling of the Contractor's obligations under the Contract. The Contractor, or a competent and authorised representative approved of by the Engineer, which approval may at any time be withdrawn, shall give his whole time to the superintendence of the Works. Such authorised representative shall receive, on behalf of the Contractor, instructions from the Engineer.

If approval of the representative is withdrawn by the Engineer, the Contractor shall, as soon as is practicable, having regard to the requirement of replacing him as hereinafter mentioned, after receiving notice of such withdrawal, remove the representative from the Works and shall not thereafter employ him again on the Works in any capacity and shall replace him by another representative approved by the Engineer.

Contractor's Employees **16. 1** The Contractor shall provide on the Site in connection with the execution and completion of the Works and the remedying of any defects therein:

(a) only such technical assistants as are skilled and experienced in their respective callings and such foremen and leading hands as are competent to give proper superintendence of the Works, and

(b) such skilled, semi-skilled and unskilled labour as is necessary for the proper and timely fulfilling of the Contractor's obligations under the Contract.

Engineer at Liberty to Object **16.2** The Engineer shall be at liberty to object to and require the Contractor to remove forthwith from the Works any person provided by the Contractor who, in the opinion of the Engineer, misconducts himself, or is incompetent or negligent in the proper performance of his duties, or whose presence on Site is otherwise considered by the Engineer to be undesirable, and such person shall not be again allowed upon the Works without the consent of the Engineer. Any person so removed from the Works shall be replaced as soon as possible.

© FIDIC 1987

Setting-out **17. 1** The Contractor shall be responsible for:

(a) the accurate setting-out of the Works in relation to original points, lines and levels of reference given by the Engineer in writing,

(b) the correctness, subject as above mentioned, of the position, levels, dimensions and alignment of all parts of the Works, and

(c) the provision of all necessary instruments, appliances and labour in connection with the foregoing responsibilities.

If, at any time during the execution of the Works, any error appears in the position, levels, dimensions or alignment of any part of the Works, the Contractor, on being required so to do by the Engineer, shall, at his own cost, rectify such error to the satisfaction of the Engineer, unless such error is based on incorrect data supplied in writing by the Engineer, in which case the Engineer shall determine an addition to the Contract Price in accordance with Clause 52 and shall notify the Contractor accordingly, with a copy to the Employer.

The checking of any setting-out or of any line or level by the Engineer shall not in any way relieve the Contractor of his responsibility for the accuracy thereof and the Contractor shall carefully protect and preserve all bench-marks, sight-rails, pegs and other things used in setting-out the Works.

Boreholes and Exploratory Excavation **18.1** If, at any time during the execution of the Works, the Engineer requires the Contractor to make boreholes or to carry out exploratory excavation, such requirement shall be the subject of an instruction in accordance with Clause 51, unless an item or a Provisional Sum in respect of such work is included in the Bill of Quantities.

Safety, Security and Protection of the Environment **19.1** The Contractor shall, throughout the execution and completion of the Works and the remedying of any defects therein:

(a) have full regard for the safety of all persons entitled to be upon the Site and keep the Site (so far as the same is under his control) and the Works (so far as the same are not completed or occupied by the Employer) in an orderly state appropriate to the avoidance of danger to such persons,

(b) provide and maintain at his own cost all lights, guards, fencing, warning signs and watching, when and where necessary or required by the Engineer or by any duly constituted authority, for the protection of the Works or for the safety and convenience of the public or others, and

(c) take all reasonable steps to protect the environment on and off the Site and to avoid damage or nuisance to persons or to property of the public or others resulting from pollution, noise or other causes arising as a consequence of his methods of operation.

Employer's Responsibilities **19.2** If under Clause 31 the Employer shall carry out work on the Site with his own workmen he shall, in respect of such work:

(a) have full regard to the safety of all persons entitled to be upon the Site, and

(b) keep the Site in an orderly state appropriate to the avoidance of danger to such persons.

If under Clause 31 the Employer shall employ other contractors on the Site he shall require them to have the same regard for safety and avoidance of danger.

Care of Works **20.1** The Contractor shall take full responsibility for the care of the Works and materials and Plant for incorporation therein from the Commencement Date until the date of issue of the Taking-Over Certificate for the whole of the Works, when the responsibility for the said care shall pass to the Employer. Provided that:

(a) if the Engineer issues a Taking-Over Certificate for any Section or part of the Permanent Works the Contractor shall cease to be liable for the care of that Section or part from the date of issue of the Taking-Over Certificate, when the responsibility for the care of that Section or part shall pass to the Employer, and

(b) the Contractor shall take full responsibility for the care of any outstanding Works and materials and Plant for incorporation therein which he undertakes to finish during the Defects Liability Period until such outstanding Works have been completed pursuant to Clause 49.

Responsibility to Rectify Loss or Damage

20.2 If any loss or damage happens to the Works, or any part thereof, or materials or Plant for incorporation therein, during the period for which the Contractor is responsible for the care thereof, from any cause whatsoever, other than the risks defined in Sub-Clause 20.4, the Contractor shall, at his own cost, rectify such loss or damage so that the Permanent Works conform in every respect with the provisions of the Contract to the satisfaction of the Engineer. The Contractor shall also be liable for any loss or damage to the Works occasioned by him in the course of any operations carried out by him for the purpose of complying with his obligations under Clauses 49 and 50.

Loss or Damage Due to Employer's Risks

20.3 In the event of any such loss or damage happening from any of the risks defined in Sub-Clause 20.4, or in combination with other risks, the Contractor shall, if and to the extent required by the Engineer, rectify the loss or damage and the Engineer shall determine an addition to the Contract Price in accordance with Clause 52 and shall notify the Contractor accordingly, with a copy to the Employer. In the case of a combination of risks causing loss or damage any such determination shall take into account the proportional responsibility of the Contractor and the Employer.

Employer's Risks

20.4 The Employer's risks are:

(a) war, hostilities (whether war be declared or not), invasion, act of foreign enemies,

(b) rebellion, revolution, insurrection, or military or usurped power, or civil war,

(c) ionising radiations, or contamination by radio-activity from any nuclear fuel, or from any nuclear waste from the combustion of nuclear fuel, radio-active toxic explosive or other hazardous properties of any explosive nuclear assembly or nuclear component thereof,

(d) pressure waves caused by aircraft or other aerial devices travelling at sonic or supersonic speeds,

(e) riot, commotion or disorder, unless solely restricted to employees of the Contractor or of his Subcontractors and arising from the conduct of the Works,

(f) loss or damage due to the use or occupation by the Employer of any Section or part of the Permanent Works, except as may be provided for in the Contract,

(g) loss or damage to the extent that it is due to the design of the Works, other than any part of the design provided by the Contractor or for which the Contractor is responsible, and

(h) any operation of the forces of nature against which an experienced contractor could not reasonably have been expected to take precautions.

Insurance of Works and Contractor's Equipment

21.1 The Contractor shall, without limiting his or the Employer's obligations and responsibilities under Clause 20, insure:

(a) the Works, together with materials and Plant for incorporation therein, to the full replacement cost (the term "cost" in this context shall include profit),

(b) an additional sum of 15 per cent of such replacement cost, or as may be specified in Part II of these Conditions, to cover any additional costs of and incidental to the rectification of loss or damage including professional fees and the cost of demolishing and removing any part of the Works and of removing debris of whatsoever nature, and

(c) the Contractor's Equipment and other things brought onto the Site by the Contractor, for a sum sufficient to provide for their replacement at the Site.

© FIDIC 1987

Scope of Cover **21.2** The insurance in paragraphs (a) and (b) of Sub-Clause 21.1 shall be in the joint names of the Contractor and the Employer and shall cover:

(a) the Employer and the Contractor against all loss or damage from whatsoever cause arising, other than as provided in Sub-Clause 21.4, from the start of work at the Site until the date of issue of the relevant Taking-Over Certificate in respect of the Works or any Section or part thereof as the case may be, and

(b) the Contractor for his liability:

(i) during the Defects Liability Period for loss or damage arising from a cause occurring prior to the commencement of the Defects Liability Period, and

(ii) for loss or damage occasioned by the Contractor in the course of any operations carried out by him for the purpose of complying with his obligations under Clauses 49 and 50.

Responsibility for Amounts not Recovered **21.3** Any amounts not insured or not recovered from the insurers shall be borne by the Employer or the Contractor in accordance with their responsibilities under Clause 20.

Exclusions **21.4** There shall be no obligation for the insurances in Sub-Clause 21.1 to include loss or damage caused by:

(a) war, hostilities (whether war be declared or not), invasion, act of foreign enemies,

(b) rebellion, revolution, insurrection, or military or usurped power, or civil war,

(c) ionising radiations, or contamination by radio-activity from any nuclear fuel, or from any nuclear waste from the combustion of nuclear fuel, radio-active toxic explosive or other hazardous properties of any explosive nuclear assembly or nuclear component thereof, or

(d) pressure waves caused by aircraft or other aerial devices travelling at sonic or supersonic speeds.

Damage to Persons and Property **22.1** The Contractor shall, except if and so far as the Contract provides otherwise, indemnify the Employer against all losses and claims in respect of:

(a) death of or injury to any person, or

(b) loss of or damage to any property (other than the Works),

which may arise out of or in consequence of the execution and completion of the Works and the remedying of any defects therein, and against all claims, proceedings, damages, costs, charges and expenses whatsoever in respect thereof or in relation thereto, subject to the exceptions defined in Sub-Clause 22.2.

Exceptions **22.2** The "exceptions" referred to in Sub-Clause 22.1 are:

(a) the permanent use or occupation of land by the Works, or any part thereof,

(b) the right of the Employer to execute the Works, or any part thereof, on, over, under, in or through any land,

(c) damage to property which is the unavoidable result of the execution and completion of the Works, or the remedying of any defects therein, in accordance with the Contract, and

(d) death of or injury to persons or loss of or damage to property resulting from any act or neglect of the Employer, his agents, servants or other contractors, not being employed by the Contractor, or in respect of any claims, proceedings, damages, costs, charges and expenses in respect thereof or in relation thereto or, where the injury or damage was contributed to by the Contractor, his servants or agents, such part of the said injury or damage as may be just and equitable having regard to the extent of the responsibility of the Employer, his servants or agents or other contractors for the injury or damage.

© FIDIC 1987

Indemnity by Employer **22.3** The Employer shall indemnify the Contractor against all claims, proceedings, damages, costs, charges and expenses in respect of the matters referred to in the exceptions defined in Sub-Clause 22.2.

Third Party Insurance (including Employer's Property) **23.1** The Contractor shall, without limiting his or the Employer's obligations and responsibilities under Clause 22, insure, in the joint names of the Contractor and the Employer, against liabilities for death of or injury to any person (other than as provided in Clause 24) or loss of or damage to any property (other than the Works) arising out of the performance of the Contract, other than the exceptions defined in paragraphs (a), (b) and (c) of Sub-Clause 22.2.

Minimum Amount of Insurance **23.2** Such insurance shall be for at least the amount stated in the Appendix to Tender.

Cross Liabilities **23.3** The insurance policy shall include a cross liability clause such that the insurance shall apply to the Contractor and to the Employer as separate insureds.

Accident or Injury to Workmen **24.1** The Employer shall not be liable for or in respect of any damages or compensation payable to any workman or other person in the employment of the Contractor or any Subcontractor, other than death or injury resulting from any act or default of the Employer, his agents or servants. The Contractor shall indemnify and keep indemnified the Employer against all such damages and compensation, other than those for which the Employer is liable as aforesaid, and against all claims, proceedings, damages, costs, charges, and expenses whatsoever in respect thereof or in relation thereto.

Insurance Against Accident to Workmen **24.2** The Contractor shall insure against such liability and shall continue such insurance during the whole of the time that any persons are employed by him on the Works. Provided that, in respect of any persons employed by any Subcontractor, the Contractor's obligations to insure as aforesaid under this Sub-Clause shall be satisfied if the Subcontractor shall have insured against the liability in respect of such persons in such manner that the Employer is indemnified under the policy, but the Contractor shall require such Subcontractor to produce to the Employer, when required, such policy of insurance and the receipt for the payment of the current premium.

Evidence and Terms of Insurances **25.1** The Contractor shall provide evidence to the Employer prior to the start of work at the Site that the insurances required under the Contract have been effected and shall, within 84 days of the Commencement Date, provide the insurance policies to the Employer. When providing such evidence and such policies to the Employer, the Contractor shall notify the Engineer of so doing. Such insurance policies shall be consistent with the general terms agreed prior to the issue of the Letter of Acceptance. The Contractor shall effect all insurances for which he is responsible with insurers and in terms approved by the Employer.

Adequacy of Insurances **25.2** The Contractor shall notify the insurers of changes in the nature, extent or programme for the execution of the Works and ensure the adequacy of the insurances at all times in accordance with the terms of the Contract and shall, when required, produce to the Employer the insurance policies in force and the receipts for payment of the current premiums.

Remedy on Contractor's Failure to Insure **25.3** If the Contractor fails to effect and keep in force any of the insurances required under the Contract, or fails to provide the policies to the Employer within the period required by Sub-Clause 25.1, then and in any such case the Employer may effect and keep in force any such insurances and pay any premium as may be necessary for that purpose and from time to time deduct the amount so paid from any monies due or to become due to the Contractor, or recover the same as a debt due from the Contractor.

Compliance with Policy Conditions **25.4** In the event that the Contractor or the Employer fails to comply with conditions imposed by the insurance policies effected pursuant to the Contract, each shall indemnify the other against all losses and claims arising from such failure.

© FIDIC 1987

Compliance with Statutes, Regulations

26.1 The Contractor shall conform in all respects, including by the giving of all notices and the paying of all fees, with the provisions of:

(a) any National or State Statute, Ordinance, or other Law, or any regulation, or bye-law of any local or other duly constituted authority in relation to the execution and completion of the Works and the remedying of any defects therein, and

(b) the rules and regulations of all public bodies and companies whose property or rights are affected or may be affected in any way by the Works,

and the Contractor shall keep the Employer indemnified against all penalties and liability of every kind for breach of any such provisions. Provided always that the Employer shall be responsible for obtaining any planning, zoning or other similar permission required for the Works to proceed and shall indemnify the Contractor in accordance with Sub-Clause 22.3.

Fossils

27.1 All fossils, coins, articles of value or antiquity and structures and other remains or things of geological or archaeological interest discovered on the Site shall, as between the Employer and the Contractor, be deemed to be the absolute property of the Employer. The Contractor shall take reasonable precautions to prevent his workmen or any other persons from removing or damaging any such article or thing and shall, immediately upon discovery thereof and before removal, acquaint the Engineer of such discovery and carry out the Engineer's instructions for dealing with the same. If, by reason of such instructions, the Contractor suffers delay and/or incurs costs then the Engineer shall, after due consultation with the Employer and the Contractor, determine:

(a) any extension of time to which the Contractor is entitled under Clause 44, and

(b) the amount of such costs, which shall be added to the Contract Price,

and shall notify the Contractor accordingly, with a copy to the Employer.

Patent Rights

28.1 The Contractor shall save harmless and indemnify the Employer from and against all claims and proceedings for or on account of infringement of any patent rights, design trademark or name or other protected rights in respect of any Contractor's Equipment, materials or Plant used for or in connection with or for incorporation in the Works and from and against all damages, costs, charges and expenses whatsoever in respect thereof or in relation thereto, except where such infringement results from compliance with the design or Specification provided by the Engineer.

Royalties

28.2 Except where otherwise stated, the Contractor shall pay all tonnage and other royalties, rent and other payments or compensation, if any, for getting stone, sand, gravel, clay or other materials required for the Works.

Interference with Traffic and Adjoining Properties

29.1 All operations necessary for the execution and completion of the Works and the remedying of any defects therein shall, so far as compliance with the requirements of the Contract permits, be carried on so as not to interfere unnecessarily or improperly with:

(a) the convenience of the public, or

(b) the access to, use and occupation of public or private roads and footpaths to or of properties whether in the possession of the Employer or of any other person.

The Contractor shall save harmless and indemnify the Employer in respect of all claims, proceedings, damages, costs, charges and expenses whatsoever arising out of, or in relation to, any such matters insofar as the Contractor is responsible therefor.

© FIDIC 1987

Avoidance of Damage to Roads

30.1 The Contractor shall use every reasonable means to prevent any of the roads or bridges communicating with or on the routes to the Site from being damaged or injured by any traffic of the Contractor or any of his Subcontractors and, in particular, shall select routes, choose and use vehicles and restrict and distribute loads so that any such extraordinary traffic as will inevitably arise from the moving of materials, Plant, Contractor's Equipment or Temporary Works from and to the Site shall be limited, as far as reasonably possible, and so that no unnecessary damage or injury may be occasioned to such roads and bridges.

Transport of Contractor's Equipment or Temporary Works

30.2 Save insofar as the Contract otherwise provides, the Contractor shall be responsible for and shall pay the cost of strengthening any bridges or altering or improving any road communicating with or on the routes to the Site to facilitate the movement of Contractor's Equipment or Temporary Works and the Contractor shall indemnify and keep indemnified the Employer against all claims for damage to any such road or bridge caused by such movement, including such claims as may be made directly against the Employer, and shall negotiate and pay all claims arising solely out of such damage.

Transport of Materials or Plant

30.3 If, notwithstanding Sub-Clause 30.1, any damage occurs to any bridge or road communicating with or on the routes to the Site arising from the transport of materials or Plant, the Contractor shall notify the Engineer with a copy to the Employer, as soon as he becomes aware of such damage or as soon as he receives any claim from the authority entitled to make such claim. Where under any law or regulation the haulier of such materials or Plant is required to indemnify the road authority against damage the Employer shall not be liable for any costs, charges or expenses in respect thereof or in relation thereto. In other cases the Employer shall negotiate the settlement of and pay all sums due in respect of such claim and shall indemnify the Contractor in respect thereof and in respect of all claims, proceedings, damages, costs, charges and expenses in relation thereto. Provided that if and so far as any such claim or part thereof is, in the opinion of the Engineer, due to any failure on the part of the Contractor to observe and perform his obligations under Sub-Clause 30.1, then the amount, determined by the Engineer, after due consultation with the Employer and the Contractor, to be due to such failure shall be recoverable from the Contractor by the Employer and may be deducted by the Employer from any monies due or to become due to the Contractor and the Engineer shall notify the Contractor accordingly, with a copy to the Employer. Provided also that the Employer shall notify the Contractor whenever a settlement is to be negotiated and, where any amount may be due from the Contractor, the Employer shall consult with the Contractor before such settlement is agreed.

Waterborne Traffic

30.4 Where the nature of the Works is such as to require the use by the Contractor of waterborne transport the foregoing provisions of this Clause shall be construed as though "road" included a lock, dock, sea wall or other structure related to a waterway and "vehicle" included craft, and shall have effect accordingly.

Opportunities for Other Contractors

31.1 The Contractor shall, in accordance with the requirements of the Engineer, afford all reasonable opportunities for carrying out their work to:

(a) any other contractors employed by the Employer and their workmen,

(b) the workmen of the Employer, and

(c) the workmen of any duly constituted authorities who may be employed in the execution on or near the Site of any work not included in the Contract or of any contract which the Employer may enter into in connection with or ancillary to the Works.

Facilities for Other Contractors

31.2 If, however, pursuant to Sub-Clause 31.1 the Contractor shall, on the written request of the Engineer:

(a) make available to any such other contractor, or to the Employer or any such authority, any roads or ways for the maintenance of which the Contractor is responsible,

© FIDIC 1987

(b) permit the use, by any such, of Temporary Works or Contractor's Equipment on the Site, or

(c) provide any other service of whatsoever nature for any such,

the Engineer shall determine an addition to the Contract Price in accordance with Clause 52 and shall notify the Contractor accordingly, with a copy to the Employer.

Contractor to Keep Site Clear **32.1** During the execution of the Works the Contractor shall keep the Site reasonably free from all unnecessary obstruction and shall store or dispose of any Contractor's Equipment and surplus materials and clear away and remove from the Site any wreckage, rubbish or Temporary Works no longer required.

Clearance of Site on Completion **33.1** Upon the issue of any Taking-Over Certificate the Contractor shall clear away and remove from that part of the Site to which such Taking-Over Certificate relates all Contractor's Equipment, surplus material, rubbish and Temporary Works of every kind, and leave such part of the Site and Works clean and in a workmanlike condition to the satisfaction of the Engineer. Provided that the Contractor shall be entitled to retain on Site, until the end of the Defects Liability Period, such materials, Contractor's Equipment and Temporary Works as are required by him for the purpose of fulfilling his obligations during the Defects Liability Period.

Labour

Engagement of Staff and Labour **34.1** The Contractor shall, unless otherwise provided in the Contract, make his own arrangements for the engagement of all staff and labour, local or other, and for their payment, housing, feeding and transport.

Returns of Labour and Contractor's Equipment **35.1** The Contractor shall, if required by the Engineer, deliver to the Engineer a return in detail, in such form and at such intervals as the Engineer may prescribe, showing the staff and the numbers of the several classes of labour from time to time employed by the Contractor on the Site and such information respecting Contractor's Equipment as the Engineer may require.

Materials, Plant and Workmanship

Quality of Materials, Plant and Workmanship **36.1** All materials, Plant and workmanship shall be:

(a) of the respective kinds described in the Contract and in accordance with the Engineer's instructions, and

(b) subjected from time to time to such tests as the Engineer may require at the place of manufacture, fabrication or preparation, or on the Site or at such other place or places as may be specified in the Contract, or at all or any of such places.

The Contractor shall provide such assistance, labour, electricity, fuels, stores, apparatus and instruments as are normally required for examining, measuring and testing any materials or Plant and shall supply samples of materials, before incorporation in the Works, for testing as may be selected and required by the Engineer.

Cost of Samples **36.2** All samples shall be supplied by the Contractor at his own cost if the supply thereof is clearly intended by or provided for in the Contract.

Cost of Tests **36.3** The cost of making any test shall be borne by the Contractor if such test is:

(a) clearly intended by or provided for in the Contract, or

(b) particularised in the Contract (in cases only of a test under load or of a test to ascertain whether the design of any finished or partially finished work is appropriate for the purposes which it was intended to fulfil) in sufficient detail to enable the Contractor to price or allow for the same in his Tender.

© FIDIC 1987

Cost of Tests not Provided for

36.4 If any test required by the Engineer which is:

(a) not so intended by or provided for,

(b) (in the cases above mentioned) not so particularised, or

(c) (though so intended or provided for) required by the Engineer to be carried out at any place other than the Site or the place of manufacture, fabrication or preparation of the materials or Plant tested,

shows the materials, Plant or workmanship not to be in accordance with the provisions of the Contract to the satisfaction of the Engineer, then the cost of such test shall be borne by the Contractor, but in any other case Sub-Clause 36.5 shall apply.

Engineer's Determination where Tests not Provided for

36.5 Where, pursuant to Sub-Clause 36.4, this Sub-Clause applies the Engineer shall, after due consultation with the Employer and the Contractor, determine:

(a) any extension of time to which the Contractor is entitled under Clause 44, and

(b) the amount of such costs, which shall be added to the Contract Price,

and shall notify the Contractor accordingly, with a copy to the Employer.

Inspection of Operations

37.1 The Engineer, and any person authorised by him, shall at all reasonable times have access to the Site and to all workshops and places where materials or Plant are being manufactured, fabricated or prepared for the Works and the Contractor shall afford every facility for and every assistance in obtaining the right to such access.

Inspection and Testing

37.2 The Engineer shall be entitled, during manufacture, fabrication or preparation to inspect and test the materials and Plant to be supplied under the Contract. If materials or Plant are being manufactured, fabricated or prepared in workshops or places other than those of the Contractor, the Contractor shall obtain permission for the Engineer to carry out such inspection and testing in those workshops or places. Such inspection or testing shall not release the Contractor from any obligation under the Contract.

Dates for Inspection and Testing

37.3 The Contractor shall agree with the Engineer on the time and place for the inspection or testing of any materials or Plant as provided in the Contract. The Engineer shall give the Contractor not less than 24 hours notice of his intention to carry out the inspection or to attend the tests. If the Engineer, or his duly authorised representative, does not attend on the date agreed, the Contractor may, unless otherwise instructed by the Engineer, proceed with the tests, which shall be deemed to have been made in the presence of the Engineer. The Contractor shall forthwith forward to the Engineer duly certified copies of the test readings. If the Engineer has not attended the tests, he shall accept the said readings as accurate.

Rejection

37.4 If, at the time and place agreed in accordance with Sub-Clause 37.3, the materials or Plant are not ready for inspection or testing or if, as a result of the inspection or testing referred to in this Clause, the Engineer determines that the materials or Plant are defective or otherwise not in accordance with the Contract, he may reject the materials or Plant and shall notify the Contractor thereof immediately. The notice shall state the Engineer's objections with reasons. The Contractor shall then promptly make good the defect or ensure that rejected materials or Plant comply with the Contract. If the Engineer so requests, the tests of rejected materials or Plant shall be made or repeated under the same terms and conditions. All costs incurred by the Employer by the repetition of the tests shall, after due consultation with the Employer and the Contractor, be determined by the Engineer and shall be recoverable from the Contractor by the Employer and may be deducted from any monies due or to become due to the Contractor and the Engineer shall notify the Contractor accordingly, with a copy to the Employer.

© FIDIC 1987

Independent Inspection **37.5** The Engineer may delegate inspection and testing of materials or Plant to an independent inspector. Any such delegation shall be effected in accordance with Sub-Clause 2.4 and for this purpose such independent inspector shall be considered as an assistant of the Engineer. Notice of such appointment (not being less than 14 days) shall be given by the Engineer to the Contractor.

Examination of Work before Covering up **38.1** No part of the Works shall be covered up or put out of view without the approval of the Engineer and the Contractor shall afford full opportunity for the Engineer to examine and measure any such part of the Works which is about to be covered up or put out of view and to examine foundations before any part of the Works is placed thereon. The Contractor shall give notice to the Engineer whenever any such part of the Works or foundations is or are ready or about to be ready for examination and the Engineer shall, without unreasonable delay, unless he considers it unnecessary and advises the Contractor accordingly, attend for the purpose of examining and measuring such part of the Works or of examining such foundations.

Uncovering and Making Openings **38.2** The Contractor shall uncover any part of the Works or make openings in or through the same as the Engineer may from time to time instruct and shall reinstate and make good such part. If any such part has been covered up or put out of view after compliance with the requirement of Sub-Clause 38.1 and is found to be executed in accordance with the Contract, the Engineer shall, after due consultation with the Employer and the Contractor, determine the amount of the Contractor's costs in respect of such of uncovering, making openings in or through, reinstating and making good the same, which shall be added to the Contract Price, and shall notify the Contractor accordingly, with a copy to the Employer. In any other case all costs shall be borne by the Contractor.

Removal of Improper Work, Materials or Plant **39.1** The Engineer shall have authority to issue instructions from time to time, for:

(a) the removal from the Site, within such time or times as may be specified in the instruction, of any materials or Plant which, in the opinion of the Engineer, are not in accordance with the Contract,

(b) the substitution of proper and suitable materials or Plant, and

(c) the removal and proper re-execution, notwithstanding any previous test thereof or interim payment therefor, of any work which, in respect of

(i) materials, Plant or workmanship, or

(ii) design by the Contractor or for which he is responsible,

is not, in the opinion of the Engineer, in accordance with the Contract.

Default of Contractor in Compliance **39.2** In case of default on the part of the Contractor in carrying out such instruction within the time specified therein or, if none, within a reasonable time, the Employer shall be entitled to employ and pay other persons to carry out the same and all costs consequent thereon or incidental thereto shall, after due consultation with the Employer and the Contractor, be determined by the Engineer and shall be recoverable from the Contractor by the Employer, and may be deducted by the Employer from any monies due or to become due to the Contractor and the Engineer shall notify the Contractor accordingly, with a copy to the Employer.

Suspension

Suspension of Work **40. 1** The Contractor shall, on the instructions of the Engineer, suspend the progress of the Works or any part thereof for such time and in such manner as the Engineer may consider necessary and shall, during such suspension, properly protect and secure the Works or such part thereof so far as is necessary in the opinion of the Engineer. Unless such suspension is:

(a) otherwise provided for in the Contract,

(b) necessary by reason of some default of or breach of contract by the Contractor or for which he is responsible,

© FIDIC 1987

(c) necessary by reason of climatic conditions on the Site, or

(d) necessary for the proper execution of the Works or for the safety of the Works or any part thereof (save to the extent that such necessity arises from any act or default by the Engineer or the Employer or from any of the risks defined in Sub-Clause 20.4),

Sub-Clause 40.2 shall apply.

Engineer's Determination following Suspension

40.2 Where, pursuant to Sub-Clause 40.1, this Sub-Clause applies the Engineer shall, after due consultation with the Employer and the Contractor, determine:

(a) any extension of time to which the Contractor is entitled under Clause 44, and

(b) the amount, which shall be added to the Contract Price, in respect of the cost incurred by the Contractor by reason of such suspension,

and shall notify the Contractor accordingly, with a copy to the Employer.

Suspension lasting more than 84 Days

40.3 If the progress of the Works or any part thereof is suspended on the instructions of the Engineer and if permission to resume work is not given by the Engineer within a period of 84 days from the date of suspension then, unless such suspension is within paragraph (a), (b), (c) or (d) of Sub-Clause 40.1, the Contractor may give notice to the Engineer requiring permission, within 28 days from the receipt thereof, to proceed with the Works or that part thereof in regard to which progress is suspended. If, within the said time, such permission is not granted, the Contractor may, but is not bound to, elect to treat the suspension, where it affects part only of the Works, as an omission of such part under Clause 51 by giving a further notice to the Engineer to that effect, or, where it affects the whole of the Works, treat the suspension as an event of default by the Employer and terminate his employment under the Contract in accordance with the provisions of Sub-Clause 69.1, whereupon the provisions of Sub-Clauses 69.2 and 69.3 shall apply.

Commencement and Delays

Commencement of Works

41.1 The Contractor shall commence the Works as soon as is reasonably possible after the receipt by him of a notice to this effect from the Engineer, which notice shall be issued within the time stated in the Appendix to Tender after the date of the Letter of Acceptance. Thereafter, the Contractor shall proceed with the Works with due expedition and without delay.

Possession of Site and Access Thereto

42.1 Save insofar as the Contract may prescribe:

(a) the extent of portions of the Site of which the Contractor is to be given possession from time to time,

(b) the order in which such portions shall be made available to the Contractor,

and, subject to any requirement in the Contract as to the order in which the Works shall be executed, the Employer will, with the Engineer's notice to commence the Works, give to the Contractor possession of

(c) so much of the Site, and

(d) such access as, in accordance with the Contract, is to be provided by the Employer as may be required to enable the Contractor to commence and proceed with the execution of the Works in accordance with the programme referred to in Clause 14, if any, and otherwise in accordance with such reasonable proposals as the Contractor shall, by notice to the Engineer with a copy to the Employer, make. The Employer will, from time to time as the Works proceed, give to the Contractor possession of such further portions of the Site as may be required to enable the Contractor to proceed with the execution of the Works with due dispatch in accordance with such programme or proposals, as the case may be.

© FIDIC 1987

Failure to Give Possession

42.2 If the Contractor suffers delay and/or incurs costs from failure on the part of the Employer to give possession in accordance with the terms of Sub-Clause 42. 1, the Engineer shall, after due consultation with the Employer and the Contractor, determine:

(a) any extension of time to which the Contractor is entitled under Clause 44, and

(b) the amount of such costs, which shall be added to the Contract Price,

and shall notify the Contractor accordingly, with a copy to the Employer.

Rights of Way and Facilities

42.3 The Contractor shall bear all costs and charges for special or temporary rights of way required by him in connection with access to the Site. The Contractor shall also provide at his own cost any additional facilities outside the Site required by him for the purposes of the Works.

Time for Completion

43.1 The whole of the Works and, if applicable, any Section required to be completed within a particular time as stated in the Appendix to Tender, shall be completed, in accordance with the provisions of Clause 48, within the time stated in the Appendix to Tender for the whole of the Works or the Section (as the case may be), calculated from the Commencement Date, or such extended time as may be allowed under Clause 44.

Extension of Time for Completion

44.1 In the event of:

(a) the amount or nature of extra or additional work,

(b) any cause of delay referred to in these Conditions,

(c) exceptionally adverse climatic conditions,

(d) any delay, impediment or prevention by the Employer, or

(e) other special circumstances which may occur, other than through a default of or breach of contract by the Contractor or for which he is responsible,

being such as fairly to entitle the Contractor to an extension of the Time for Completion of the Works, or any Section or part thereof, the Engineer shall, after due consultation with the Employer and the Contractor, determine the amount of such extension and shall notify the Contractor accordingly, with a copy to the Employer.

Contractor to Provide Notification and Detailed Particulars

44.2 Provided that the Engineer is not bound to make any determination unless the Contractor has

(a) within 28 days after such event has first arisen notified the Engineer with a copy to the Employer, and

(b) within 28 days, or such other reasonable time as may be agreed by the Engineer, after such notification submitted to the Engineer detailed particulars of any extension of time to which he may consider himself entitled in order that such submission may be investigated at the time.

Interim Determination of Extension

44.3 Provided also that where an event has a continuing effect such that it is not practicable for the Contractor to submit detailed particulars within the period of 28 days referred to in Sub-Clause 44.2(b), he shall nevertheless be entitled to an extension of time provided that he has submitted to the Engineer interim particulars at intervals of not more than 28 days and final particulars within 28 days of the end of the effects resulting from the event. On receipt of such interim particulars, the Engineer shall, without undue delay, make an interim determination of extension of time and, on receipt of the final particulars, the Engineer shall review all the circumstances and shall determine an overall extension of time in regard to the event. In both such cases the Engineer shall make his determination after due consultation with the Employer and the Contractor and shall notify the Contractor of the determination, with a copy to the Employer. No final review shall result in a decrease of any extension of time already determined by the Engineer.

© FIDIC 1987

Restriction on Working Hours

45.1 Subject to any provision to the contrary contained in the Contract, none of the Works shall, save as hereinafter provided, be carried on during the night or on locally recognised days of rest without the consent of the Engineer, except when work is unavoidable or absolutely necessary for the saving of life or property or for the safety of the Works, in which case the Contractor shall immediately advise the Engineer. Provided that the provisions of this Clause shall not be applicable in the case of any work which it is customary to carry out by multiple shifts.

Rate of Progress

46.1 If for any reason, which does not entitle the Contractor to an extension of time, the rate of progress of the Works or any Section is at any time, in the opinion of the Engineer, too slow to comply with the Time for Completion, the Engineer shall so notify the Contractor who shall thereupon take such steps as are necessary, subject to the consent of the Engineer, to expedite progress so as to comply with the Time for Completion. The Contractor shall not be entitled to any additional payment for taking such steps. If, as a result of any notice given by the Engineer under this Clause, the Contractor considers that it is necessary to do any work at night or on locally recognised days of rest, he shall be entitled to seek the consent of the Engineer so to do. Provided that if any steps, taken by the Contractor in meeting his obligations under this Clause, involve the Employer in additional supervision costs, such costs shall, after due consultation with the Employer and the Contractor, be determined by the Engineer and shall be recoverable from the Contractor by the Employer, and may be deducted by the Employer from any monies due or to become due to the Contractor and the Engineer shall notify the Contractor accordingly, with a copy to the Employer.

Liquidated Damages for Delay

47.1 If the Contractor fails to comply with the Time for Completion in accordance with Clause 48, for the whole of the Works or, if applicable, any Section within the relevant time prescribed by Clause 43, then the Contractor shall pay to the Employer the relevant sum stated in the Appendix to Tender as liquidated damages for such default and not as a penalty (which sum shall be the only monies due from the Contractor for such default) for every day or part of a day which shall elapse between the relevant Time for Completion and the date stated in a Taking-Over Certificate of the whole of the Works or the relevant Section, subject to the applicable limit stated in the Appendix to Tender. The Employer may, without prejudice to any other method of recovery, deduct the amount of such damages from any monies due or to become due to the Contractor. The payment or deduction of such damages shall not relieve the Contractor from his obligation to complete the Works, or from any other of his obligations and liabilities under the Contract.

Reduction of Liquidated Damages

47.2 If, before the Time for Completion of the whole of the Works or, if applicable, any Section, a Taking-Over Certificate has been issued for any part of the Works or of a Section, the liquidated damages for delay in completion of the remainder of the Works or of that Section shall, for any period of delay after the date stated in such Taking-Over Certificate, and in the absence of alternative provisions in the Contract, be reduced in the proportion which the value of the part so certified bears to the value of the whole of the Works or Section, as applicable. The provisions of this Sub-Clause shall only apply to the rate of liquidated damages and shall not affect the limit thereof.

© FIDIC 1987

Taking-Over Certificate **48.1** When the whole of the Works have been substantially completed and have satisfactorily passed any Tests on Completion prescribed by the Contract, the Contractor may give a notice to that effect to the Engineer, with a copy to the Employer, accompanied by a written undertaking to finish with due expedition any outstanding work during the Defects Liability Period. Such notice and undertaking shall be deemed to be a request by the Contractor for the Engineer to issue a Taking-Over Certificate in respect of the Works. The Engineer shall, within 21 days of the date of delivery of such notice, either issue to the Contractor, with a copy to the Employer, a Taking-Over Certificate, stating the date on which, in his opinion, the Works were substantially completed in accordance with the Contract, or give instructions in writing to the Contractor specifying all the work which, in the Engineer's opinion, is required to be done by the Contractor before the issue of such Certificate. The Engineer shall also notify the Contractor of any defects in the Works affecting substantial completion that may appear after such instructions and before completion of the Works specified therein. The Contractor shall be entitled to receive such Taking-Over Certificate within 21 days of completion, to the satisfaction of the Engineer, of the Works so specified and remedying any defects so notified.

Taking Over of Sections or Parts **48.2** Similarly, in accordance with the procedure set out in Sub-Clause 48.1, the Contractor may request and the Engineer shall issue a Taking-Over Certificate in respect of:

(a) any Section in respect of which a separate Time for Completion is provided in the Appendix to Tender,

(b) any substantial part of the Permanent Works which has been both completed to the satisfaction of the Engineer and, otherwise than as provided for in the Contract, occupied or used by the Employer, or

(c) any part of the Permanent Works which the Employer has elected to occupy or use prior to completion (where such prior occupation or use is not provided for in the Contract or has not been agreed by the Contractor as a temporary measure).

Substantial Completion of Parts **48.3** If any part of the Permanent Works has been substantially completed and has satisfactorily passed any Tests on Completion prescribed by the Contract, the Engineer may issue a Taking-Over Certificate in respect of that part of the Permanent Works before completion of the whole of the Works and, upon the issue of such Certificate, the Contractor shall be deemed to have undertaken to complete with due expedition any outstanding work in that part of the Permanent Works during the Defects Liability Period.

Surfaces Requiring Reinstatement **48.4** Provided that a Taking-Over Certificate given in respect of any Section or part of the Permanent Works before completion of the whole of the Works shall not be deemed to certify completion of any ground or surfaces requiring reinstatement, unless such Taking-Over Certificate shall expressly so state.

Defects Liability

Defects Liability Period **49.1** In these Conditions the expression "Defects Liability Period" shall mean the defects liability period named in the Appendix to Tender, calculated from:

(a) the date of completion of the Works certified by the Engineer in accordance with Clause 48, or

(b) in the event of more than one certificate having been issued by the Engineer under Clause 48, the respective dates so certified,

and in relation to the Defects Liability Period the expression "the Works" shall be construed accordingly.

Completion of Outstanding Work and Remedying Defects

49.2 To the intent that the Works shall, at or as soon as practicable after the expiration of the Defects Liability Period, be delivered to the Employer in the condition required by the Contract, fair wear and tear excepted, to the satisfaction of the Engineer, the Contractor shall:

(a) complete the work, if any, outstanding on the date stated in the Taking-Over Certificate as soon as practicable after such date, and

(b) execute all such work of amendment, reconstruction, and remedying defects, shrinkages or other faults as the Engineer may, during the Defects Liability Period or within 14 days after its expiration, as a result of an inspection made by or on behalf of the Engineer prior to its expiration, instruct the Contractor to execute.

Cost of Remedying Defects

49.3 All work referred to in Sub-Clause 49.2 (b) shall be executed by the Contractor at his own cost if the necessity thereof is, in the opinion of the Engineer, due to:

(a) the use of materials, Plant or workmanship not in accordance with the Contract,

(b) where the Contractor is responsible for the design of part of the Permanent Works, any fault in such design, or

(c) the neglect or failure on the part of the Contractor to comply with any obligation, expressed or implied, on the Contractor's part under the Contract.

If, in the opinion of the Engineer, such necessity is due to any other cause, he shall determine an addition to the Contract Price in accordance with Clause 52 and shall notify the Contractor accordingly, with a copy to the Employer.

Contractor's Failure to Carry Out Instructions

49.4 In case of default on the part of the Contractor in carrying out such instruction within a reasonable time, the Employer shall be entitled to employ and pay other persons to carry out the same and if such work is work which, in the opinion of the Engineer, the Contractor was liable to do at his own cost under the Contract, then all costs consequent thereon or incidental thereto shall, after due consultation with the Employer and the Contractor, be determined by the Engineer and shall be recoverable from the Contractor by the Employer, and may be deducted by the Employer from any monies due or to become due to the Contractor and the Engineer shall notify the Contractor accordingly, with a copy to the Employer.

Contractor to Search

50.1 If any defect, shrinkage or other fault in the Works appears at any time prior to the end of the Defects Liability Period, the Engineer may instruct the Contractor, with copy to the Employer, to search under the directions of the Engineer for the cause thereof. Unless such defect, shrinkage or other fault is one for which the Contractor is liable under the Contract, the Engineer shall, after due consultation with the Employer and the Contractor, determine the amount in respect of the costs of such search incurred by the Contractor, which shall be added to the Contract Price and shall notify the Contractor accordingly, with a copy to the Employer. If such defect, shrinkage or other fault is one for which the Contractor is liable, the cost of the work carried out in searching as aforesaid shall be borne by the Contractor and he shall in such case remedy such defect, shrinkage or other fault at his own cost in accordance with the provisions of Clause 49.

Alterations, Additions and Omissions

Variations

51.1 The Engineer shall make any variation of the form, quality or quantity of the Works or any part thereof that may, in his opinion, be necessary and for that purpose, or if for any other reason it shall, in his opinion, be appropriate, he shall have the authority to instruct the Contractor to do and the Contractor shall do any of the following:

(a) increase or decrease the quantity of any work included in the Contract,

(b) omit any such work (but not if the omitted work is to be carried out by the Employer or by another contractor),

© FIDIC 1987

(c) change the character or quality or kind of any such work,

(d) change the levels, lines, position and dimensions of any part of the Works,

(e) execute additional work of any kind necessary for the completion of the Works, or

(f) change any specified sequence or timing of construction of any part of the Works.

No such variation shall in any way vitiate or invalidate the Contract, but the effect, if any, of all such variations shall be valued in accordance with Clause 52. Provided that where the issue of an instruction to vary the Works is necessitated by some default of or breach of contract by the Contractor or for which he is responsible, any additional cost attributable to such default shall be borne by the Contractor.

Instructions for Variations

51.2 The Contractor shall not make any such variation without an instruction of the Engineer. Provided that no instruction shall be required for increase or decrease in the quantity of any work where such increase or decrease is not the result of an instruction given under this Clause, but is the result of the quantities exceeding or being less than those stated in the Bill of Quantities.

Valuation of Variations

52.1 All variations referred to in Clause 51 and any additions to the Contract Price which are required to be determined in accordance with Clause 52 (for the purposes of this Clause referred to as "varied work"), shall be valued at the rates and prices set out in the Contract if, in the opinion of the Engineer, the same shall be applicable. If the Contract does not contain any rates or prices applicable to the varied work, the rates and prices in the Contract shall be used as the basis for valuation so far as may be reasonable, failing which, after due consultation by the Engineer with the Employer and the Contractor, suitable rates or prices shall be agreed upon between the Engineer and the Contractor. In the event of disagreement the Engineer shall fix such rates or prices as are, in his opinion, appropriate and shall notify the Contractor accordingly, with a copy to the Employer. Until such time as rates or prices are agreed or fixed, the Engineer shall determine provisional rates or prices to enable on-account payments to be included in certificates issued in accordance with Clause 60.

Power of Engineer to Fix Rates

52.2 Provided that if the nature or amount of any varied work relative to the nature or amount of the whole of the Works or to any part thereof, is such that, in the opinion of the Engineer, the rate or price contained in the Contract for any item of the Works is, by reason of such varied work, rendered inappropriate or inapplicable, then, after due consultation by the Engineer with the Employer and the Contractor, a suitable rate or price shall be agreed upon between the Engineer and the Contractor. In the event of disagreement the Engineer shall fix such other rate or price as is, in his opinion, appropriate and shall notify the Contractor accordingly, with a copy to the Employer. Until such time as rates or prices are agreed or fixed, the Engineer shall determine provisional rates or prices to enable on-account payments to be included in certificates issued in accordance with Clause 60.

Provided also that no varied work instructed to be done by the Engineer pursuant to Clause 51 shall be valued under Sub-Clause 52.1 or under this Sub-Clause unless, within 14 days of the date of such instruction and, other than in the case of omitted work, before the commencement of the varied work, notice shall have been given either:

(a) by the Contractor to the Engineer of his intention to claim extra payment or a varied rate or price, or

(b) by the Engineer to the Contractor of his intention to vary a rate or price.

Variations Exceeding 15 per cent

52.3 If, on the issue of the Taking-Over Certificate for the whole of the Works, it is found that as a result of:

(a) all varied work valued under Sub-Clauses 52.1 and 52.2, and

(b) all adjustments upon measurement of the estimated quantities set out in the Bill of Quantities, excluding Provisional Sums, dayworks and adjustments of price made under Clause 70,

but not from any other cause, there have been additions to or deductions from the Contract Price which taken together are in excess of 15 per cent of the "Effective Contract Price" (which for the purposes of this Sub-Clause shall mean the Contract Price, excluding Provisional Sums and allowance for dayworks, if any) then and in such event (subject to any action already taken under any other Sub-Clause of this Clause), after due consultation by the Engineer with the Employer and the Contractor, there shall be added to or deducted from the Contract Price such further sum as may be agreed between the Contractor and the Engineer or, failing agreement, determined by the Engineer having regard to the Contractor's Site and general overhead costs of the Contract. The Engineer shall notify the Contractor of any determination made under this Sub-Clause, with a copy to the Employer. Such sum shall be based only on the amount by which such additions or deductions shall be in excess of 15 per cent of the Effective Contract Price.

Daywork **52.4** The Engineer may, if in his opinion it is necessary or desirable, issue an instruction that any varied work shall be executed on a daywork basis. The Contractor shall then be paid for such varied work under the terms set out in the daywork schedule included in the Contract and at the rates and prices affixed thereto by him in the Tender.

The Contractor shall furnish to the Engineer such receipts or other vouchers as may be necessary to prove the amounts paid and, before ordering materials, shall submit to the Engineer quotations for the same for his approval.

In respect of such of the Works executed on a daywork basis, the Contractor shall, during the continuance of such work, deliver each day to the Engineer an exact list in duplicate of the names, occupation and time of all workmen employed on such work and a statement, also in duplicate, showing the description and quantity of all materials and Contractor's Equipment used thereon or therefor other than Contractor's Equipment which is included in the percentage addition in accordance with such daywork schedule. One copy of each list and statement will, if correct, or when agreed, be signed by the Engineer and returned to the Contractor.

At the end of each month the Contractor shall deliver to the Engineer a priced statement of the labour, materials and Contractor's Equipment, except as aforesaid, used and the Contractor shall not be entitled to any payment unless such lists and statements have been fully and punctually rendered. Provided always that if the Engineer considers that for any reason the sending of such lists or statements by the Contractor, in accordance with the foregoing provision, was impracticable he shall nevertheless be entitled to authorise payment for such work, either as daywork, on being satisfied as to the time employed and the labour, materials and Contractor's Equipment used on such work, or at such value therefor as shall, in his opinion, be fair and reasonable.

Procedure for Claims

Notice of Claims **53.1** Notwithstanding any other provision of the Contract, if the Contractor intends to claim any additional payment pursuant to any Clause of these Conditions or otherwise, he shall give notice of his intention to the Engineer, with a copy to the Employer, within 28 days after the event giving rise to the claim has first arisen.

Contemporary Records **53.2** Upon the happening of the event referred to in Sub-Clause 53.1, the Contractor shall keep such contemporary records as may reasonably be necessary to support any claim he may subsequently wish to make. Without necessarily admitting the Employer's liability, the Engineer shall, on receipt of a notice under Sub-Clause 53.1, inspect such contemporary records and may instruct the Contractor to keep

© FIDIC 1987

any further contemporary records as are reasonable and may be material to the claim of which notice has been given. The Contractor shall permit the Engineer to inspect all records kept pursuant to this Sub-Clause and shall supply him with copies thereof as and when the Engineer so instructs.

Substantiation of Claims **53.3** Within 28 days, or such other reasonable time as may be agreed by the Engineer, of giving notice under Sub-Clause 53.1, the Contractor shall send to the Engineer an account giving detailed particulars of the amount claimed and the grounds upon which the claim is based. Where the event giving rise to the claim has a continuing effect, such account shall be considered to be an interim account and the Contractor shall, at such intervals as the Engineer may reasonably require, send further interim accounts giving the accumulated amount of the claim and any further grounds upon which it is based. In cases where interim accounts are sent to the Engineer, the Contractor shall send a final account within 28 days of the end of the effects resulting from the event. The Contractor shall, if required by the Engineer so to do, copy to the Employer all accounts sent to the Engineer pursuant to this Sub-Clause.

Failure to Comply **53.4** If the Contractor fails to comply with any of the provisions of this Clause in respect of any claim which he seeks to make, his entitlement to payment in respect thereof shall not exceed such amount as the Engineer or any arbitrator or arbitrators appointed pursuant to Sub-Clause 67.3 assessing the claim considers to be verified by contemporary records (whether or not such records were brought to the Engineer's notice as required under Sub-Clauses 53.2 and 53.3).

Payment of Claims **53.5** The Contractor shall be entitled to have included in any interim payment certified by the Engineer pursuant to Clause 60 such amount in respect of any claim as the Engineer, after due consultation with the Employer and the Contractor, may consider due to the Contractor provided that the Contractor has supplied sufficient particulars to enable the Engineer to determine the amount due. If such particulars are insufficient to substantiate the whole of the claim, the Contractor shall be entitled to payment in respect of such part of the claim as such particulars may substantiate to the satisfaction of the Engineer. The Engineer shall notify the Contractor of any determination made under this Sub-Clause, with a copy to the Employer.

Contractor's Equipment, Temporary Works and Materials

Contractor's Equipment, Temporary Works and Materials; Exclusive Use for the Works **54.1** All Contractor's Equipment, Temporary Works and materials provided by the Contractor shall, when brought on to the Site, be deemed to be exclusively intended for the execution of the Works and the Contractor shall not remove the same or any part thereof, except for the purpose of moving it from one part of the Site to another, without the consent of the Engineer. Provided that consent shall not be required for vehicles engaged in transporting any staff, labour, Contractor's Equipment, Temporary Works, Plant or materials to or from the Site.

Employer not Liable for Damage **54.2** The Employer shall not at any time be liable, save as mentioned in Clauses 20 and 65, for the loss of or damage to any of the said Contractor's Equipment, Temporary Works or materials.

Customs Clearance **54.3** The Employer will use his best endeavours in assisting the Contractor, where required, in obtaining clearance through the Customs of Contractor's Equipment, materials and other things required for the Works.

Re-export of Contractor's Equipment **54.4** In respect of any Contractor's Equipment which the Contractor has imported for the purposes of the Works, the Employer will use his best endeavours to assist the Contractor, where required, in procuring any necessary Government consent to the re-export of such Contractor's Equipment by the Contractor upon the removal thereof pursuant to the terms of the Contract.

Conditions of Hire of Contractor's Equipment

54.5 With a view to securing, in the event of termination under Clause 63, the continued availability, for the purpose of executing the Works, of any hired Contractor's Equipment, the Contractor shall not bring on to the Site any hired Contractor's Equipment unless there is an agreement for the hire thereof (which agreement shall be deemed not to include an agreement for hire purchase) which contains a provision that the owner thereof will, on request in writing made by the Employer within 7 days after the date on which any termination has become effective, and on the Employer undertaking to pay all hire charges in respect thereof from such date, hire such Contractor's Equipment to the Employer on the same terms in all respects as the same was hired to the Contractor save that the Employer shall be entitled to permit the use thereof by any other contractor employed by him for the purpose of executing and completing the Works and remedying any defects therein, under the terms of the said Clause 63.

Costs for the Purpose of Clause 63

54.6 In the event of the Employer entering into any agreement for the hire of Contractor's Equipment pursuant to Sub-Clause 54.5, all sums properly paid by the Employer under the provisions of any such agreement and all costs incurred by him (including stamp duties) in entering into such agreement shall be deemed, for the purpose of Clause 63, to be part of the cost of executing and completing the Works and the remedying of any defects therein.

Incorporation of Clause in Subcontracts

54.7 The Contractor shall, where entering into any subcontract for the execution of any part of the Works, incorporate in such subcontract (by reference or otherwise) the provisions of this Clause in relation to Contractor's Equipment, Temporary Works or materials brought on to the Site by the Subcontractor.

Approval of Materials not Implied

54.8 The operation of this Clause shall not be deemed to imply any approval by the Engineer of the materials or other matters referred to therein nor shall it prevent the rejection of any such materials at any time by the Engineer.

Measurement

Quantities

55.1 The quantities set out in the Bill of Quantities are the estimated quantities for the Works, and they are not to be taken as the actual and correct quantities of the Works to be executed by the Contractor in fulfilment of his obligations under the Contract.

Works to be Measured

56.1 The Engineer shall, except as otherwise stated, ascertain and determine by measurement the value of the Works in accordance with the Contract and the Contractor shall be paid that value in accordance with Clause 60. The Engineer shall, when he requires any part of the Works to be measured, give reasonable notice to the Contractor's authorised agent, who shall:

(a) forthwith attend or send a qualified representative to assist the Engineer in making such measurement, and

(b) supply all particulars required by the Engineer.

Should the Contractor not attend, or neglect or omit to send such representative, then the measurement made by the Engineer or approved by him shall be taken to be the correct measurement of such part of the Works. For the purpose of measuring such Permanent Works as are to be measured by records and drawings, the Engineer shall prepare records and drawings as the work proceeds and the Contractor, as and when called upon to do so in writing, shall, within 14 days, attend to examine and agree such records and drawings with the Engineer and shall sign the same when so agreed. If the Contractor does not attend to examine and agree such records and drawings, they shall be taken to be correct. If, after examination of such records and drawings, the Contractor does not agree the same or does not sign the same as agreed, they shall nevertheless be taken to be correct, unless the Contractor, within 14 days of such examination, lodges with the Engineer notice of the respects in which such records and drawings are claimed by him to be incorrect. On receipt of such notice, the Engineer shall review the records and drawings and either confirm or vary them.

© FIDIC 1987

Method of Measurement

57.1 The Works shall be measured net, notwithstanding any general or local custom, except where otherwise provided for in the Contract.

Breakdown of Lump Sum Items

57.2 For the purposes of statements submitted in accordance with Sub-Clause 60.1, the Contractor shall submit to the Engineer, within 28 days after the receipt of the Letter of Acceptance, a breakdown for each of the lump sum items contained in the Tender. Such breakdowns shall be subject to the approval of the Engineer.

Provisional Sums

Definition of "Provisional Sum"

58.1 "Provisional Sum" means a sum included in the Contract and so designated in the Bill of Quantities for the execution of any part of the Works or for the supply of goods, materials, Plant or services, or for contingencies, which sum may be used, in whole or in part, or not at all, on the instructions of the Engineer. The Contractor shall be entitled to only such amounts in respect of the work, supply or contingencies to which such Provisional Sums relate as the Engineer shall determine in accordance with this Clause. The Engineer shall notify the Contractor of any determination made under this Sub-Clause, with a copy to the Employer.

Use of Provisional Sums

58.2 In respect of every Provisional Sum the Engineer shall have authority to issue instructions for the execution of work or for the supply of goods, materials, Plant or services by:

(a) the Contractor, in which case the Contractor shall be entitled to an amount equal to the value thereof determined in accordance with Clause 52, and

(b) a nominated Subcontractor, as hereinafter defined, in which case the sum to be paid to the Contractor therefor shall be determined and paid in accordance with Sub-Clause 59.4.

Production of Vouchers

58.3 The Contractor shall produce to the Engineer all quotations, invoices, vouchers and accounts or receipts in connection with expenditure in respect of Provisional Sums, except where work is valued in accordance with rates or prices set out in the Tender.

Nominated Subcontractors

Definition of "Nominated Subcontractors"

59.1 All specialists, merchants, tradesmen and others executing any work or supplying any goods, materials, Plant or services for which Provisional Sums are included in the Contract, who may have been or be nominated or selected or approved by the Employer or the Engineer, and all persons to whom by virtue of the provisions of the Contract the Contractor is required to subcontract shall, in the execution of such work or the supply of such goods, materials, Plant or services, be deemed to be subcontractors to the Contractor and are referred to in this Contract as "nominated Subcontractors".

Nominated Subcontractors; Objection to Nomination

59.2 The Contractor shall not be required by the Employer or the Engineer, or be deemed to be under any obligation, to employ any nominated Subcontractor against whom the Contractor may raise reasonable objection, or who declines to enter into a subcontract with the Contractor containing provisions:

(a) that in respect of the work, goods, materials, Plant or services the subject of the subcontract, the nominated Subcontractor will undertake towards the Contractor such obligations and liabilities as will enable the Contractor to discharge his own obligations and liabilities towards the Employer under the terms of the Contract and will save harmless and indemnify the Contractor from and against the same and from all claims, proceedings, damages, costs, charges and expenses whatsoever arising out of or in connection therewith, or arising out of or in connection with any failure to perform such obligations or to fulfil such liabilities, and

(b) that the nominated Subcontractor will save harmless and indemnify the Contractor from and against any negligence by the nominated Subcontractor, his agents, workmen and servants and from and against any misuse by him or them of any Temporary Works provided by the Contractor for the purposes of the Contract and from all claims as aforesaid.

Design Requirements to be Expressly Stated

59.3 If in connection with any Provisional Sum the services to be provided include any matter of design or specification of any part of the Permanent Works or of any Plant to be incorporated therein, such requirement shall be expressly stated in the Contract and shall be included in any nominated Subcontract. The nominated Subcontract shall specify that the nominated Subcontractor providing such services will save harmless and indemnify the Contractor from and against the same and from all claims, proceedings, damages, costs, charges and expenses whatsoever arising out of or in connection with any failure to perform such obligations or to fulfil such liabilities.

Payments to Nominated Subcontractors

59.4 For all work executed or goods, materials, Plant or services supplied by any nominated Subcontractor, the Contractor shall be entitled to:

(a) the actual price paid or due to be paid by the Contractor, on the instructions of the Engineer, and in accordance with the subcontract;

(b) in respect of labour supplied by the Contractor, the sum, if any, entered in the Bill of Quantities or, if instructed by the Engineer pursuant to paragraph (a) of Sub-Clause 58.2, as may be determined in accordance with Clause 52; and

(c) in respect of all other charges and profit, a sum being a percentage rate of the actual price paid or due to be paid calculated, where provision has been made in the Bill of Quantities for a rate to be set against the relevant Provisional Sum, at the rate inserted by the Contractor against that item or, where no such provision has been made, at the rate inserted by the Contractor in the Appendix to Tender and repeated where provision for such is made in a special item provided in the Bill of Quantities for such purpose.

Certification of Payments to Nominated Subcontractors

59.5 Before issuing, under Clause 60, any certificate, which includes any payment in respect of work done or goods, materials, Plant or services supplied by any nominated Subcontractor, the Engineer shall be entitled to demand from the Contractor reasonable proof that all payments, less retentions, included in previous certificates in respect of the work or goods, materials, Plant or services of such nominated Subcontractor have been paid or discharged by the Contractor. If the Contractor fails to supply such proof then, unless the Contractor:

(a) satisfies the Engineer in writing that he has reasonable cause for withholding or refusing to make such payments, and

(b) produces to the Engineer reasonable proof that he has so informed such nominated Subcontractor in writing,

the Employer shall be entitled to pay to such nominated Subcontractor direct, upon the certificate of the Engineer, all payments, less retentions, provided for in the nominated Subcontract, which the Contractor has failed to make to such nominated Subcontractor and to deduct by way of set-off the amount so paid by the Employer from any sums due or to become due from the Employer to the Contractor.

Provided that, where the Engineer has certified and the Employer has paid direct as aforesaid, the Engineer shall, in issuing any further certificate in favour of the Contractor, deduct from the amount thereof the amount so paid, direct as aforesaid, but shall not withhold or delay the issue of the certificate itself when due to be issued under the terms of the Contract.

© FIDIC 1987

Certificates and Payment

Monthly Statements **60.1** The Contractor shall submit to the Engineer after the end of each month six copies, each signed by the Contractor's representative approved by the Engineer in accordance with Sub-Clause 15.1, of a statement, in such form as the Engineer may from time to time prescribe, showing the amounts to which the Contractor considers himself to be entitled up to the end of the month in respect of:

(a) the value of the Permanent Works executed,

(b) any other items in the Bill of Quantities including those for Contractor's Equipment, Temporary Works, dayworks and the like,

(c) the percentage of the invoice value of listed materials, all as stated in the Appendix to Tender, and Plant delivered by the Contractor on the Site for incorporation in the Permanent Works but not incorporated in such Works,

(d) adjustments under Clause 70, and

(e) any other sum to which the Contractor may be entitled under the Contract or otherwise.

Monthly Payments **60.2** The Engineer shall, within 28 days of receiving such statement, deliver to the Employer an Interim Payment Certificate stating the amount of payment to the Contractor which the Engineer considers due and payable in respect of such statement, subject:

(a) firstly, to the retention of the amount calculated by applying the Percentage of Retention stated in the Appendix to Tender, to the amount to which the Contractor is entitled under paragraphs (a), (b), (c) and (e) of Sub-Clause 60.1 until the amount so retained reaches the Limit of Retention Money stated in the Appendix to Tender, and

(b) secondly, to the deduction, other than pursuant to Clause 47, of any sums which may have become due and payable by the Contractor to the Employer.

Provided that the Engineer shall not be bound to certify any payment under this Sub-Clause if the net amount thereof, after all retentions and deductions, would be less than the Minimum Amount of Interim Payment Certificates stated in the Appendix to Tender.

Notwithstanding the terms of this Clause or any other Clause of the Contract no amount will be certified by the Engineer for payment until the performance security, if required under the Contract, has been provided by the Contractor and approved by the Employer.

Payment of Retention Money **60.3** (a) Upon the issue of the Taking-Over Certificate with respect to the whole of the Works, one half of the Retention Money, or upon the issue of a Taking-Over Certificate with respect to a Section or part of the Permanent Works only such proportion thereof as the Engineer determines having regard to the relative value of such Section or part of the Permanent Works, shall be certified by the Engineer for payment to the Contractor.

(b) Upon the expiration of the Defects Liability Period for the Works the other half of the Retention Money shall be certified by the Engineer for payment to the Contractor. Provided that, in the event of different Defects Liability Periods having become applicable to different Sections or parts of the Permanent Works pursuant to Clause 48, the expression "expiration of the Defects Liability Period" shall, for the purposes of this Sub-Clause, be deemed to mean the expiration of the latest of such periods. Provided also that if at such time there shall remain to be executed by the Contractor any work instructed, pursuant to Clauses 49 and 50, in respect of the Works, the Engineer shall be entitled to withhold certification until completion of such work of so much of the balance of the Retention Money as shall, in the opinion of the Engineer, represent the cost of the work remaining to be executed.

Correction of Certificates **60.4** The Engineer may by any Interim Payment Certificate make any correction or modification in any previous Interim Payment Certificate which shall have been issued by him and shall have authority, if any work is not being carried out to his satisfaction, to omit or reduce the value of such work in any Interim Payment Certificate.

© FIDIC 1987

Statement at Completion **60.5** Not later than 84 days after the issue of the Taking-Over Certificate in respect of the whole of the Works, the Contractor shall submit to the Engineer six copies of a Statement at Completion with supporting documents showing in detail, in the form approved by the Engineer:

(a) the final value of all work done in accordance with the Contract up to the date stated in such Taking-Over Certificate,

(b) any further sums which the Contractor considers to be due, and

(c) an estimate of amounts which the Contractor considers will become due to him under the Contract.

The estimated amounts shall be shown separately in such Statement at Completion. The Engineer shall certify payment in accordance with Sub-Clause 60.2.

Final Statement **60.6** Not later than 56 days after the issue of the Defects Liability Certificate pursuant to Sub-Clause 62.1, the Contractor shall submit to the Engineer for consideration six copies of a draft final statement with supporting documents showing in detail, in the form approved by the Engineer:

(a) the value of all work done in accordance with the Contract, and

(b) any further sums which the Contractor considers to be due to him under the Contract or otherwise.

If the Engineer disagrees with or cannot verify any part of the draft final statement, the Contractor shall submit such further information as the Engineer may reasonably require and shall make such changes in the draft as may be agreed between them. The Contractor shall then prepare and submit to the Engineer the final statement as agreed (for the purposes of these Conditions referred to as the "Final Statement").

If, following discussions between the Engineer and the Contractor and any changes to the draft final statement which may be agreed between them, it becomes evident that a dispute exists, the Engineer shall deliver to the Employer an Interim Payment Certificate for those parts of the draft final statement, if any, which are not in dispute. The dispute may then be settled in accordance with Clause 67.

Discharge **60.7** Upon submission of the Final Statement, the Contractor shall give to the Employer, with a copy to the Engineer, a written discharge confirming that the total of the Final Statement represents full and final settlement of all monies due to the Contractor arising out of or in respect of the Contract. Provided that such discharge shall become effective only after payment due under the Final Payment Certificate issued pursuant to Sub-Clause 60.8 has been made and the performance security referred to in Sub-Clause 10.1, if any, has been returned to the Contractor.

Final Payment Certificate **60.8** Within 28 days after receipt of the Final Statement, and the written discharge, the Engineer shall issue to the Employer (with a copy to the Contractor) a Final Payment Certificate stating:

(a) the amount which, in the opinion of the Engineer, is finally due under the Contract or otherwise, and

(b) after giving credit to the Employer for all amounts previously paid by the Employer and for all sums to which the Employer is entitled other than under Clause 47, the balance, if any, due from the Employer to the Contractor or from the Contractor to the Employer as the case may be.

Cessation of Employer's Liability **60.9** The Employer shall not be liable to the Contractor for any matter or thing arising out of or in connection with the Contract or execution of the Works, unless the Contractor shall have included a claim in respect thereof in his Final Statement and (except in respect of matters or things arising after the issue of the Taking-Over Certificate in respect of the whole of the Works) in the Statement at Completion referred to in Sub-Clause 60.5.

© FIDIC 1987

Time for Payment **60.10** The amount due to the Contractor under any Interim Payment Certificate issued by the Engineer pursuant to this Clause, or to any other term of the Contract, shall, subject to Clause 47, be paid by the Employer to the Contractor within 28 days after such Interim Payment Certificate has been delivered to the Employer, or, in the case of the Final Payment Certificate referred to in Sub-Clause 60.8, within 56 days, after such Final Payment Certificate has been delivered to the Employer. In the event of the failure of the Employer to make payment within the times stated, the Employer shall pay to the Contractor interest at the rate stated in the Appendix to Tender upon all sums unpaid from the date by which the same should have been paid. The provisions of this Sub-Clause are without prejudice to the Contractor's entitlement under Clause 69 or otherwise.

Approval only by Defects Liability Certificate **61.1** Only the Defects Liability Certificate, referred to in Clause 62, shall be deemed to constitute approval of the Works.

Defects Liability Certificate **62.1** The Contract shall not be considered as completed until a Defects Liability Certificate shall have been signed by the Engineer and delivered to the Employer, with a copy to the Contractor, stating the date on which the Contractor shall have completed his obligations to execute and complete the Works and remedy any defects therein to the Engineer's satisfaction. The Defects Liability Certificate shall be given by the Engineer within 28 days after the expiration of the Defects Liability Period, or, if different defects liability periods shall become applicable to different Sections or parts of the Permanent Works, the expiration of the latest such period, or as soon thereafter as any works instructed, pursuant to Clauses 49 and 50, have been completed to the satisfaction of the Engineer. Provided that the issue of the Defects Liability Certificate shall not be a condition precedent to payment to the Contractor of the second portion of the Retention Money in accordance with the conditions set out in Sub-Clause 60.3.

Unfulfilled Obligations **62.2** Notwithstanding the issue of the Defects Liability Certificate the Contractor and the Employer shall remain liable for the fulfilment of any obligation incurred under the provisions of the Contract prior to the issue of the Defects Liability Certificate which remains unperformed at the time such Defects Liability Certificate is issued and, for the purposes of determining the nature and extent of any such obligation, the Contract shall be deemed to remain in force between the parties to the Contract.

Remedies

Default of Contractor **63.1** If the Contractor is deemed by law unable to pay his debts as they fall due, or enters into voluntary or involuntary bankruptcy, liquidation or dissolution (other than a voluntary liquidation for the purposes of amalgamation or reconstruction), or becomes insolvent, or makes an arrangement with, or assignment in favour of, his creditors, or agrees to carry out the Contract under a committee of inspection of his creditors, or if a receiver, administrator, trustee or liquidator is appointed over any substantial part of his assets, or if, under any law or regulation relating to reorganization, arrangement or readjustment of debts, proceedings are commenced against the Contractor or resolutions passed in connection with dissolution or liquidation or if any steps are taken to enforce any security interest over a substantial part of the assets of the Contractor, or if any act is done or event occurs with respect to the Contractor or his assets which, under any applicable law has a substantially similar effect to any of the foregoing acts or events, or if the Contractor has contravened Sub-Clause 3.1, or has an execution levied on his goods, or if the Engineer certifies to the Employer, with a copy to the Contractor, that, in his opinion, the Contractor:

(a) has repudiated the Contract,

(b) without reasonable excuse has failed

(i) to commence the Works in accordance with Sub-Clause 41.1, or

(ii) to proceed with the Works, or any Section thereof, within 28 days after receiving notice pursuant to Sub-Clause 46.1,

(c) has failed to comply with a notice issued pursuant to Sub-Clause 37.4 or an instruction issued pursuant to Sub-Clause 39.1 within 28 days after having received it,

(d) despite previous warning from the Engineer, in writing, is otherwise persistently or flagrantly neglecting to comply with any of his obligations under the Contract, or

(e) has contravened Sub-Clause 4.1,

then the Employer may, after giving 14 days' notice to the Contractor, enter upon the Site and the Works and terminate the employment of the Contractor without thereby releasing the Contractor from any of his obligations or liabilities under the Contract, or affecting the rights and authorities conferred on the Employer or the Engineer by the Contract, and may himself complete the Works or may employ any other contractor to complete the Works. The Employer or such other contractor may use for such completion so much of the Contractor's Equipment, Temporary Works and materials as he or they may think proper.

Valuation at Date of Termination

63.2 The Engineer shall, as soon as may be practicable after any such entry and termination by the Employer, fix and determine ex parte, or by or after reference to the parties or after such investigation or enquiries as he may think fit to make or institute, and shall certify:

a) what amount (if any) had, at the time of such entry and termination, been reasonably earned by or would reasonably accrue to the Contractor in respect of work then actually done by him under the Contract, and

(b) the value of any of the said unused or partially used materials, any Contractor's Equipment and any Temporary Works.

Payment after Termination

63.3 If the Employer terminates the Contractor's employment under this Clause, he shall not be liable to pay to the Contractor any further amount (including damages) in respect of the Contract until the expiration of the Defects Liability Period and there after until the costs of execution, completion and remedying of any defects, damages for delay in completion (if any) and all other expenses incurred by the Employer have been ascertained and the amount thereof certified by the Engineer. The Contractor shall then be entitled to receive only such sum (if any) as the Engineer may certify would have been payable to him upon due completion by him after deducting the said amount. If such amount exceeds the sum which would have been payable to the Contractor on due completion by him, then the Contractor shall, upon demand, pay to the Employer the amount of such excess and it shall be deemed a debt due by the Contractor to the Employer and shall be recoverable accordingly.

Assignment of Benefit of Agreement

63.4 Unless prohibited by law, the Contractor shall, if so instructed by the Engineer within 14 days of such entry and termination referred to in Sub-Clause 63.1, assign to the Employer the benefit of any agreement for the supply of any goods or materials or services and/or for the execution of any work for the purposes of the Contract, which the Contractor may have entered into.

Urgent Remedial Work

64.1 If, by reason of any accident, or failure, or other event occurring to, in, or in connection with the Works, or any part thereof, either during the execution of the Works, or during the Defects Liability Period, any remedial or other work is, in the opinion of the Engineer, urgently necessary for the safety of the Works and the Contractor is unable or unwilling at once to do such work, the Employer shall be entitled to employ and pay other persons to carry out such work as the Engineer may consider necessary. If the work or repair so done by the Employer is work which, in the opinion of the Engineer, the Contractor was liable to do at his own cost under the Contract, then all costs consequent thereon or incidental thereto shall, after due consultation with the Employer and the Contractor, be determined by the Engineer and shall be recoverable from the Contractor by the Employer, and may be deducted by the Employer from any monies due or to become due to the Contractor and the Engineer shall notify the Contractor accordingly, with a copy to the Employer. Provided that the Engineer shall, as soon after the occurrence of any such emergency as may be reasonably practicable, notify the Contractor thereof.

© FIDIC 1987

Special Risks

No Liability for Special Risks **65.1** The Contractor shall be under no liability whatsoever in consequence of any of the special risks referred to in Sub-Clause 65.2, whether by way of indemnity or otherwise, for or in respect of:

(a) destruction of or damage to the Works, save to work condemned under the provisions of Clause 39 prior to the occurrence of any of the said special risks,

(b) destruction of or damage to property, whether of the Employer or third parties, or

(c) injury or loss of life.

Special Risks **65.2** The special risks are:

(a) the risks defined under paragraphs (a), (c), (d) and (e) of Sub-Clause 20.4, and

(b) the risks defined under paragraph (b) of Sub-Clause 20.4 insofar as these relate to the country in which the Works are to be executed.

Damage to Works by Special Risks **65.3** If the Works or any materials or Plant on or near or in transit to the Site, or any of the Contractor's Equipment, sustain destruction or damage by reason of any of the said special risks, the Contractor shall be entitled to payment in accordance with the Contract for any Permanent Works duly executed and for any materials or Plant so destroyed or damaged and, so far as may be required by the Engineer or as may be necessary for the completion of the Works, to payment for:

(a) rectifying any such destruction or damage to the Works, and

(b) replacing or rectifying such materials or Contractor's Equipment,

and the Engineer shall determine an addition to the Contract Price in accordance with Clause 52 (which shall in the case of the cost of replacement of Contractor's Equipment include the fair market value thereof as determined by the Engineer) and shall notify the Contractor accordingly, with a copy to the Employer.

Projectile, Missile **65.4** Destruction, damage, injury or loss of life caused by the explosion or impact, whenever and wherever occurring, of any mine, bomb, shell, grenade, or other projectile, missile, munition, or explosive of war, shall be deemed to be a consequence of the said special risks.

Increased Costs arising from Special Risks **65.5** Save to the extent that the Contractor is entitled to payment under any other provision of the Contract, the Employer shall repay to the Contractor any costs of the execution of the Works (other than such as may be attributable to the cost of reconstructing work condemned under the provisions of Clause 39 prior to the occurrence of any special risk) which are howsoever attributable to or consequent on or the result of or in any way whatsoever connected with the said special risks, subject however to the provisions in this Clause hereinafter contained in regard to outbreak of war, but the Contractor shall, as soon as any such cost comes to his knowledge, forthwith notify the Engineer thereof. The Engineer shall, after due consultation with the Employer and the Contractor, determine the amount of the Contractor's costs in respect thereof which shall be added to the Contract Price and shall notify the Contractor accordingly, with a copy to the Employer.

Outbreak of War **65.6** If, during the currency of the Contract, there is an outbreak of war, whether war is declared or not, in any part of the world which, whether financially or otherwise, materially affects the execution of the Works, the Contractor shall, unless and until the Contract is terminated under the provisions of this Clause, continue to use his best endeavours to complete the execution of the Works. Provided that the Employer shall be entitled, at any time after such outbreak of war, to terminate the Contract by giving notice to the Contractor and, upon such notice being given, the Contract shall, except as to the rights of the parties under this Clause and Clause 67, terminate, but without prejudice to the rights of either party in respect of any antecedent breach thereof.

© FIDIC 1987

Removal of Contractor's Equipment on Termination

65.7 If the Contract is terminated under the provisions of Sub-Clause 65.6, the Contractor shall, with all reasonable dispatch, remove from the Site all Contractor's Equipment and shall give similar facilities to his Subcontractors to do so.

Payment if Contract Terminated

65.8 If the Contract is terminated as aforesaid, the Contractor shall be paid by the Employer, insofar as such amounts or items have not already been covered by payments on account made to the Contractor, for all work executed prior to the date of termination at the rates and prices provided in the Contract and in addition:

(a) the amounts payable in respect of any preliminary items referred to in the Bill of Quantities, so far as the work or service comprised therein has been carried out or performed, and a proper proportion of any such items which have been partially carried out or performed;

(b) the cost of materials, Plant or goods reasonably ordered for the Works which have been delivered to the Contractor or of which the Contractor is legally liable to accept delivery, such materials, Plant or goods becoming the property of the Employer upon such payments being made by him;

(c) a sum being the amount of any expenditure reasonably incurred by the Contractor in the expectation of completing the whole of the Works insofar as such expenditure has not been covered by any other payments referred to in this Sub-Clause;

(d) any additional sum payable under the provisions of Sub-Clauses 65.3 and 65.5;

(e) such proportion of the cost as may be reasonable, taking into account payments made or to be made for work executed, of removal of Contractor's Equipment under Sub-Clause 65.7 and, if required by the Contractor, return thereof to the Contractor's main plant yard in his country of registration or to other destination, at no greater cost; and

(f) the reasonable cost of repatriation of all the Contractor's staff and workmen employed on or in connection with the Works at the time of such termination.

Provided that against any payment due from the Employer under this Sub-Clause, the Employer shall be entitled to be credited with any outstanding balances due from the Contractor for advances in respect of Contractor's Equipment, materials and Plant and any other sums which, at the date of termination, were recoverable by the Employer from the Contractor under the terms of the Contract. Any sums payable under this Sub-Clause shall, after due consultation with the Employer and the Contractor, be determined by the Engineer who shall notify the Contractor accordingly, with a copy to the Employer.

Release from Performance

Payment in Event of Release from Performance

66.1 If any circumstance outside the control of both parties arises after the issue of the Letter of Acceptance which renders it impossible or unlawful for either or both parties to fulfil his or their contractual obligations, or under the law governing the Contract the parties are released from further performance, then the parties shall be discharged from the Contract, except as to their rights under this Clause and Clause 67 and without prejudice to the rights of either party in respect of any antecedent breach of the Contract, and the sum payable by the Employer to the Contractor in respect of the work executed shall be the same as that which would have been payable under Clause 65 if the Contract had been terminated under the provisions of Clause 65.

© FIDIC 1987

Settlement of Disputes

Engineer's Decision **67.1** If a dispute of any kind whatsoever arises between the Employer and the Contractor in connection with, or arising out of, the Contract or the execution of the Works, whether during the execution of the Works or after their completion and whether before or after repudiation or other termination of the Contract, including any dispute as to any opinion, instruction, determination, certificate or valuation of the Engineer, the matter in dispute shall, in the first place, be referred in writing to the Engineer, with a copy to the other party. Such reference shall state that it is made pursuant to this Clause. No later than the eighty-fourth day after the day on which he received such reference the Engineer shall give notice of his decision to the Employer and the Contractor. Such decision shall state that it is made pursuant to this Clause.

Unless the Contract has already been repudiated or terminated, the Contractor shall, in every case, continue to proceed with the Works with all due diligence and the Contractor and the Employer shall give effect forthwith to every such decision of the Engineer unless and until the same shall be revised, as hereinafter provided, in an amicable settlement or an arbitral award.

If either the Employer or the Contractor be dissatisfied with any decision of the Engineer, or if the Engineer fails to give notice of his decision on or before the eighty-fourth day after the day on which he received the reference, then either the Employer or the Contractor may, on or before the seventieth day after the day on which he received notice of such decision, or on or before the seventieth day after the day on which the said period of 84 days expired, as the case may be, give notice to the other party, with a copy for information to the Engineer, of his intention to commence arbitration, as hereinafter provided, as to the matter in dispute. Such notice shall establish the entitlement of the party giving the same to commence arbitration, as hereinafter provided, as to such dispute and, subject to Sub-Clause 67.4, no arbitration in respect thereof may be commenced unless such notice is given.

If the Engineer has given notice of his decision as to a matter in dispute to the Employer and the Contractor and no notice of intention to commence arbitration as to such dispute has been given by either the Employer or the Contractor on or before the seventieth day after the day on which the parties received notice as to such decision from the Engineer, the said decision shall become final and binding upon the Employer and the Contractor.

Amicable Settlement **67.2** Where notice of intention to commence arbitration as to a dispute has been given in accordance with Sub-Clause 67.1, the parties shall attempt to settle such dispute amicably before the commencement of arbitration. Provided that, unless the parties otherwise agree, arbitration may be commenced on or after the fifty-sixth day after the day on which notice of intention to commence arbitration of such dispute was given, even if no attempt at amicable settlement thereof has been made.

Arbitration **67.3** Any dispute in respect of which:

(a) the decision, if any, of the Engineer has not become final and binding pursuant to Sub-Clause 67.1, and

(b) amicable settlement has not been reached within the period stated in Sub-Clause 67.2,

shall be finally settled, unless otherwise specified in the Contract, under the Rules of Conciliation and Arbitration of the International Chamber of Commerce by one or more arbitrators appointed under such Rules. The said arbitrator/s shall have full power to open up, review and revise any decision, opinion, instruction, determination, certificate or valuation of the Engineer related to the dispute.

Neither party shall be limited in the proceedings before such arbitrator/s to the evidence or arguments put before the Engineer for the purpose of obtaining his said decision pursuant to Sub-Clause 67.1. No such decision shall disqualify the Engineer from being called as a witness and giving evidence before the arbitrator/s on any matter whatsoever relevant to the dispute.

© FIDIC 1987

Arbitration may be commenced prior to or after completion of the Works, provided that the obligations of the Employer, the Engineer and the Contractor shall not be altered by reason of the arbitration being conducted during the progress of the Works.

Failure to Comply with Engineer's Decision

67.4 Where neither the Employer nor the Contractor has given notice of intention to commence arbitration of a dispute within the period stated in Sub-Clause 67.1 and the related decision has become final and binding, either party may, if the other party fails to comply with such decision, and without prejudice to any other rights it may have, refer the failure to arbitration in accordance with Sub-Clause 67.3. The provisions of Sub-Clauses 67.1 and 67.2 shall not apply to any such reference.

Notices

Notice to Contractor

68.1 All certificates, notices or instructions to be given to the Contractor by the Employer or the Engineer under the terms of the Contract shall be sent by post, cable, telex or facsimile transmission to or left at the Contractor's principal place of business or such other address as the Contractor shall nominate for that purpose.

Notice to Employer and Engineer

68.2 Any notice to be given to the Employer or to the Engineer under the terms of the Contract shall be sent by post, cable, telex or facsimile transmission to or left at the respective addresses nominated for that purpose in Part II of these Conditions.

Change of Address

68.3 Either party may change a nominated address to another address in the country where the Works are being executed by prior notice to the other party, with a copy to the Engineer, and the Engineer may do so by prior notice to both parties.

Default of Employer

Default of Employer

69.1 In the event of the Employer:

(a) failing to pay to the Contractor the amount due under any certificate of the Engineer within 28 days after the expiry of the time stated in Sub-Clause 60.10 within which payment is to be made, subject to any deduction that the Employer is entitled to make under the Contract,

(b) interfering with or obstructing or refusing any required approval to the issue of any such certificate,

(c) becoming bankrupt or, being a company, going into liquidation, other than for the purpose of a scheme of reconstruction or amalgamation, or

(d) giving notice to the Contractor that for unforeseen economic reasons it is impossible for him to continue to meet his contractual obligations,

the Contractor shall be entitled to terminate his employment under the Contract by giving notice to the Employer, with a copy to the Engineer. Such termination shall take effect 14 days after the giving of the notice.

Removal of Contractor's Equipment

69.2 Upon the expiry of the 14 days' notice referred to in Sub-Clause 69.1, the Contractor shall, notwithstanding the provisions of Sub-Clause 54.1, with all reasonable despatch, remove from the Site all Contractor's Equipment brought by him thereon.

Payment on Termination

69.3 In the event of such termination the Employer shall be under the same obligations to the Contractor in regard to payment as if the Contract had been terminated under the provisions of Clause 65, but, in addition to the payments specified in Sub-Clause 65.8, the Employer shall pay to the Contractor the amount of any loss or damage to the Contractor arising out of or in connection with or by consequence of such termination.

© FIDIC 1987

Contractor's Entitlement to Suspend Work

69.4 Without prejudice to the Contractor's entitlement to interest under Sub-Clause 60.10 and to terminate under Sub-Clause 69.1, the Contractor may, if the Employer fails to pay the Contractor the amount due under any certificate of the Engineer within 28 days after the expiry of the time stated in Sub-Clause 60.10 within which payment is to be made, subject to any deduction that the Employer is entitled to make under the Contract, after giving 28 days' prior notice to the Employer, with a copy to the Engineer, suspend work or reduce the rate of work.

If the Contractor suspends work or reduces the rate of work in accordance with the provisions of this Sub-Clause and thereby suffers delay or incurs costs the Engineer shall, after due consultation with the Employer and the Contractor, determine:

(a) any extension of time to which the Contractor is entitled under Clause 44, and

(b) the amount of such costs, which shall be added to the Contract Price,

and shall notify the Contractor accordingly, with a copy to the Employer.

Resumption of Work

69.5 Where the Contractor suspends work or reduces the rate of work. having given notice in accordance with Sub-Clause 69.4, and the Employer subsequently pays the amount due, including interest pursuant to Sub-Clause 60.10, the Contractor's entitlement under Sub-Clause 69.1 shall, if notice of termination has not been given, lapse and the Contractor shall resume normal working as soon as is reasonably possible.

Changes in Cost and Legislation

Increase or Decrease of Cost

70.1 There shall be added to or deducted from the Contract Price such sums in respect of rise or fall in the cost of labour and/or materials or any other matters affecting the cost of the execution of the Works as may be determined in accordance with Part II of these Conditions.

Subsequent Legislation

70.2 If, after the date 28 days prior to the latest date for submission of tenders for the Contract there occur in the country in which the Works are being or are to be executed changes to any National or State Statute, Ordinance, Decree or other Law or any regulation or bye-law of any local or other duly constituted authority, or the introduction of any such State Statute, Ordinance, Decree, Law, regulation or bye-law which causes additional or reduced cost to the Contractor, other than under Sub-Clause 70.1, in the execution of the Contract, such additional or reduced cost shall, after due consultation with the Employer and the Contractor, be determined by the Engineer and shall be added to or deducted from the Contract Price- and the Engineer shall notify the Contractor accordingly, with a copy to the Employer.

Currency and Rates of Exchange

Currency Restrictions

71.1 If, after the date 28 days prior to the latest date for submission of tenders for the Contract, the Government or authorised agency of the Government of the country in which the Works are being or are to be executed imposes currency restrictions and/or transfer of currency restrictions in relation to the currency or currencies in which the Contract Price is to be paid, the Employer shall reimburse any loss or damage to the Contractor arising therefrom, without prejudice to the right of the Contractor to exercise any other rights or remedies to which he is entitled in such event.

Rates of Exchange

72.1 Where the Contract provides for payment in whole or in part to be made to the Contractor in foreign currency or currencies, such payment shall not be subject to variations in the rate or rates of exchange between such specified foreign currency or currencies and the currency of the country in which the Works are to be executed.

© FIDIC 1987

Currency Proportions

72.2 Where the Employer has required the Tender to be expressed in a single currency but with payment to be made in more than one currency and the Contractor has stated the proportions or amounts of other currency or currencies in which he requires payment to be made, the rate or rates of exchange applicable for calculating the payment of such proportions or amounts shall, unless otherwise stated in Part II of these Conditions, be those prevailing, as determined by the Central Bank of the country in which the Works are to be executed, on the date 28 days prior to the latest date for the submission of tenders for the Contract, as has been notified to the Contractor by the Employer prior to the submission of tenders or as provided for in the Tender.

Currencies of Payment for Provisional Sums

72.3 Where the Contract provides for payment in more than one currency, the proportions or amounts to be paid in foreign currencies in respect of Provisional Sums shall be determined in accordance with the principles set forth in Sub-Clauses 72.1 and 72.2 as and when these sums are utilised in whole or in part in accordance with the provisions of Clauses 58 and 59.

REFERENCE TO PART II

As stated in the Foreword at the beginning of this document, the FIDIC Conditions comprise both Part I and Part II. Certain Clauses, namely Sub-Clauses 1.1 paragraph (a) (i) and (iv), 5.1 (part), 14.1, 14.3, 68.2 and 70.1 must include additional wording in Part II for the Conditions to be complete. Other Clauses may require additional wording to supplement Part I or to cover particular circumstances or the type of work (dredging is an example).

Part II Conditions of Particular Application with guidelines for the preparation of Part II are printed in a separately bound document.

© FIDIC 1987

PART I – GENERAL CONDITIONS

Index

	Clause
Access to Site	42.1
Access to Works, Engineer	37.1
Access, Contractor to Satisfy Himself	11.1
Accident or Injury to Workmen – Insurance Against	24.2
Accident or Injury to Workmen – Liability for	24.1
Address, Change of	68.3
Adequacy of Insurance	25.2
Adjustment of Contract Price if Variations Exceed 15 per cent of Tender Sum	52.3
Agreement	9.1
Alterations, Additions and Omissions	51. & 52.
Ambiguities in Contract Documents	5.2
Amicable Settlement of Disputes	67.2
Appointment of Assistants to Engineer	2.4
Approval by the Engineer	7.3
Approval of Materials not Implied	54.8
Approval Only by Defects Liability Certificate	61.1
Arbitration	67.3
Assignment of Contract	3.1
Avoidance of Damage to Roads	30.1
Bills of Quantities – Estimated Only	55.1
Boreholes and Exploratory Excavation	18.1
Breakdown of Lump Sum Items	57.2
Care of Works	20.1
Cash Flow Estimate to be Submitted	14.3
Certificate, Final Payment	60.8
Certificates and Payment, Monthly Statements	60.1
Certificates, Correction of	60.4
Certificate, Taking-Over	48.1
Certification of Completion of Works	48.1
Certification of Completion of Sections or Parts	48.2
Cessation of Employer's Liability	60.9
Change of Address, Notice of	68.3
Claims, Contemporary Records	53.2
Claims, Notice of	53.1
Claims, Payment of	53.5
Claims, Substantiation of	53.3
Claims Under Performance Security	10.3
Clearance of Site on Completion	33.1
Commencement of Works	41.1
Completion of Works, Time for	43.1
Completion of Works, Time for, Extension of	44.1
Completion, Statement at	60.5
Compliance with Insurance Policy Conditions	25.4
Compliance with Statutes and Regulations	26.1
Contemporary Records for Claims	53.2
Contract Agreement	9.1
Contractor Not Relieved of Duties or Responsibilities	14.4
Contractor's Employees	16.1
Contractor's Employees, Engineer at Liberty to Object	16.2
Contractor's Entitlement to Suspend Work for Employer's Default	69.4
Contractor's Equipment, Conditions of Hire	54.5
Contractor's Equipment, Employer not Liable for Damage	54.2

© FIDIC 1987

Index

Clause

Contractor's Equipment, Insurance of	**21.1**
Contractor's Equipment, Reference in Subcontracts	**54.7**
Contractor's Equipment, Temporary Works and Materials; Exclusive Use for the Works	**54.1**
Contractor's Equipment, Transport of	**30.2**
Contractor's Failure to Carry Out Instructions	**49.4**
Contractor's Failure to Insure, Remedy	**25.3**
Contractor's General Responsibilities	**8.1**
Contractor's Superintendence	**15.1**
Contractor to Keep Site Clear	**32.1**
Contractor to Search	**50.1**
Correction of Certificates	**60.4**
Cost of Remedying Defects	**49.3**
Cost of Samples	**36.2**
Cost of Tests	**36.3**
Cost of Tests not Provided for	**36.4**
Covering up Work, Examination Before	**38.1**
Cross Liabilities	**23.3**
Currencies of Payment for Provisional Sums	**72.3**
Currencies, Rates of Exchange	**72.1**
Currency Restrictions	**71.1**
Custody and Supply of Drawings and Documents	**6.1**
Customs Clearance	**54.3**
Damage to Persons and Property	**22.1**
Damage to Roads, Avoidance of	**30.1**
Damage to Works, Special Risks	**65.3**
Damages, Liquidated	**47.1**
Dates for Inspection and Testing	**37.3**
Daywork	**52.4**
Decrease or Increase of Costs	**70.1**
Default of Contractor in Compliance with Instructions on Improper Work	**39.2**
Default of Contractor, Remedies for	**63.1**
Default of Employer	**69.1**
Defective Materials and Work	**39.1**
Defects, Contractor to Search for, if Required	**50.1**
Defects, Cost of Remedying	**49.3**
Defects Liability Certificate	**62.1**
Defects Liability Period	**49.1**
Defects, Remedying of	**49.2**
Definitions	**1.1**
Delay, Liquidated Damages for	**47.1**
Delays and Cost of Delay of Drawings	**6.4**
Design by Nominated Subcontractors	**59.3**
Discharge	**60.7**
Discrepancies in Documents	**5.2**
Dismissal of Contractor's Employees	**16.2**
Disorderly Conduct, etc.	**34.1**
Disputes, Engineer's Decision	**67.1**
Disruption of Progress	**6.3**
Documents Mutually Explanatory	**5.2**
Drawings	**6 & 7**
Drawings and Documents – Custody and Supply of	**6.1**
Drawings and Instructions – Supplementary	**7.1**
Drawings, Copy to be Kept on Site	**6.2**
Drawings, Delays and Cost of Delay of Drawings	**6.4**
Drawings, Failure by Contractor to Submit	**6.5**
Employer not Liable for Damage to Contractor's Equipment etc.	**54.2**

© FIDIC 1987

Index

	Clause
Employer's Liability, Cessation of	**60.9**
Employer's Responsibilities	**19.2**
Employer's Risks	**20.4**
Engagement of Staff and Labour	**34.1**
Engineer's Authority to Delegate	**2.3**
Engineer's Determination Where Tests not Provided for	**36.5**
Engineer's Duties and Authority	**2.1**
Engineer to Act Impartially	**2.6**
Environment – Protection of	**19.1**
Errors in Setting Out	**17.1**
Evidence and Terms of Insurance	**25.1**
Examination of Work before Covering Up	**38.1**
Exceptions	**22.2**
Exchange, Rates of	**72.1**
Exclusions	**21.4**
Extension of Time, due to Employer's Failure to give Possession of Site	**42.2**
Extension of Time for Completion	**44.1**
Extension of Time for Completion, Contractor's Claim	**44.2**
Extension of Time for Completion, Engineer's Determination	**44.3**
Extraordinary Traffic	**30.**
Facilities for Other Contractors	**31.2**
Facilities – Rights of Way and	**42.3**
Failure by Contractor to Submit Drawings	**6.5**
Failure to Comply with Claims Procedure	**53.4**
Failure to Comply with Engineer's Decision	**67.4**
Failure to Give Possession of Site	**42.2**
Faulty Work, Removal of	**39.1**
Fees and Notices	**26.1**
Fencing, Watching, Lighting, etc.	**19.1**
Final Payment Certificate	**60.8**
Final Statement	**60.6**
Foreign Currencies, Payment in	**72.**
Fossils	**27.1**
Foundations, Examination of	**38.1**
General Responsibilities of Contractor	**8.1**
Giving of Notices – Payment of Fees	**26.1**
Headings and Marginal Notes	**1.2**
Improper Work and Materials, Removal of	**39.1**
Increase or Decrease of Costs	**70.1**
Indemnity by Contract	**22.1**
	& 24.1
Indemnity by Employer	**22.3**
Independent Inspection	**37.5**
Injury to Persons – Damage to Property	**22.1**
Injury to Workmen	**24.1**
Inspection and Testing	**37.2**
Inspection and Testing, Dates for	**37.3**
Inspection of Foundations, etc.	**38.1**
Inspection of Operations	**37.1**
Inspection of Site by Contractor	**11.1**
Instructions for Variations	**51.2**
Instructions in Writing	**2.5**
Instructions, Supplementary	**7.1**
Insurance, Adequacy of	**25.2**

© FIDIC 1987

Index

Clause

Insurance, Evidence and Terms of	**25.1**
Insurance, Minimum Amount of	**23.2**
Insurance of Works and Contractor's Equipment	**21.1**
Insurance, Remedy on Failure to Insure	**25.3**
Insurance, Responsibility for Amounts not Recovered	**21.3**
Insurance, Scope of Cover	**21.2**
Insurance, Third Party	**23.1**
Insurance, Workmen	**24.2**
Interference with Traffic and Adjoining Properties	**29.1**
Interim Determination of Extension	**44.3**
Interpretations	**1.3**
Labour, Engagement of	**34.1**
Language/s and Law	**5.1**
Law to which Contract Subject	**5.1**
Legislation, Subsequent	**70.2**
Lighting, Fencing, Watching, etc.	**19.1**
Liquidated Damages for Delay	**47.1**
Liquidated Damages, Reduction of	**47.2**
Loss or Damage due to Employer's Risks	**20.3**
Loss or Damage – Responsibility to Rectify	**20.2**
Lump Sum Items – Breakdown of	**57.2**
Materials and Plant, Transport of	**30.3**
Materials – Approval of, etc, not Implied	**54.8**
Materials, Improper – Removal of	**39.1**
Materials, Quality of	**36.1**
Materials, Supply of	**8.1**
Measurement by Engineer	**56.1**
Measurement, Method of	**57.1**
Measurement, Quantities Estimated Only	**55.1**
Methods of Construction	**8.2**
Minimum Amount of Insurance	**23.2**
Monthly Payments	**60.2**
Nominated Subcontractors, Certification of Payments to	**59.5**
Nominated Subcontractors, Definition	**59.1**
Nominated Subcontractors, Design by	**59.3**
Nominated Subcontractors, Objection to Nomination	**59.2**
Nominated Subcontractors, Payment to	**59.4**
Not Foreseeable Physical Obstructions or Conditions	**12.2**
Notice of Claims	**53.1**
Notices and Fees, Payment of	**26.1**
Notices, Consents and Approvals	**1.5**
Notice to Contractor	**68.1**
Notice to Employer and Engineer	**68.2**
Objections to Contractor's Employees	**16.2**
Obstructions or Conditions – Not Foreseeable Physical	**12.2**
Omissions, Alterations and Additions	**59.**
Openings, Uncovering and making	**38.2**
Operations, Inspection of	**37.1**
Order of Work, Contractor to Furnish Programme	**14.1**
Other Contractors, Opportunities for	**31.1**
Patent Rights	**28.1**
Payment if Contract Terminated for Contractor's Default	**63.3**
Payment if Contract Terminated for Employer's Default	**69.3**
Payment of Claims	**53.5**

© FIDIC 1987

Index

Clause

Payment, Time for	**60.10**
Performance Security	**10.1**
Performance Security – Claims Under	**10.3**
Performance Security – Period of Validity	**10.2**
Period of Defects Liability	**49.1**
Permanent Works Designed by Contractor	**7.2**
Physical Obstructions or Conditions – Not Foreseeable	**12.2**
Physical Obstructions or Conditions – Engineer's Determination	**12.3**
Plant and Materials, Transport of	**30.3**
Plant, Conditions of Hire	**54.5**
Plant, Customs Clearance	**54.3**
Plant, Employer not Liable for damage to	**54.2**
Plant, etc. – Exclusive Use for the Works	**54.1**
Plant, Quality of	**36.1**
Plant, Re-export of	**54.4**
Plant, Removal of	**39.1**
Policy of Insurance – Compliance with Conditions	**25.4**
Possession of Site	**42.1**
Possession of Site, Failure to Give	**42.2**
Power of Engineer to Fix Rates	**52.2**
Priority of Contract Documents	**5.2**
Programme to be Submitted	**14.1**
Progress – Disruption of	**6.3**
Progress – Rate of	**46.1**
Protection of Environment	**19.1**
Provision to Indemnify Contractor	**22.3**
Provision to Indemnify Employer	**22.2**
Provisional Sums, Currencies of Payment	**72.3**
Provisional Sums, Definition	**58.1**
Provisional Sums, Production of Vouchers	**58.3**
Provisional Sums, Use of	**58.2**
Quality of Materials and Workmanship	**36.1**
Quantities	**55.1**
Rate of Progress	**46.1**
Rates of Exchange	**72.1**
Rates, Power of Engineer to Fix	**52.2**
Rectification of Loss or Damage	**20.2**
Reduction of Liquidated Damages	**47.2**
Re-export of Plant	**54.4**
Regulations, Statutes, etc., Compliance with	**26.1**
Rejection	**37.4**
Release from Performance	**66.1**
Remedies for Default of Contractor	**63.1**
Remedying of Defects	**49.2**
Remedying of Defects, Cost of	**49.3**
Remedy on Contractor's Failure to Insure	**25.3**
Removal of Contractor's Employees	**16.2**
Removal of Contractor's Equipment	**69.2**
Removal of Improper Work, Materials or Plant	**39.1**
Removal of Plant, etc.	**65.7**
Responsibility to Rectify Loss or Damage	**20.2**
Responsibility Unaffected by Approval	**7.3**
Restriction on Working Hours	**45.1**
Resumption of Work	**69.5**
Retention Money, Payment of	**60.3**
Returns of Labour and Contractor's Equipment	**35.1**

© FIDIC 1987

Index

Clause

Revised Programme	**14.2**
Rights of Way and Facilities	**42.3**
Risks, Employer's	**20.4**
Risks, Special	**65.**
Roads, etc., - Damage by Extraordinary Traffic	**30.1**
Roads, Interference with Access to	**29.1**
Royalties	**28.2**
Safety, Security and Protection of the Environment	**19.1**
Samples, Cost of	**36.2**
Security, Safety and Protection of the Environment	**19.1**
Setting-Out	**17.1**
Singular and Plural	**1.4**
Site, Clearance on Completion	**33.1**
Site, Contractor to Keep Clear	**32.1**
Site, Inspection of by Contractor	**11.1**
Site Operations and Methods of Construction	**8.2**
Site, Possession of	**42.1**
Special Risks	**65.**
Staff, Engagement of	**34.1**
Statement at Completion	**60.5**
Statement, Final	**60.6**
Statutes, Regulations, etc. - Compliance with	**26.1**
Subcontracting	**4.1**
Subcontractors, Nominated	**59.**
Subcontractors, Responsibility of the Contractor for Acts and Default of	**4.1**
Subsequent Legislation	**70.2**
Substantial Completion of Sections or Parts	**48.3**
Sufficiency of Tender	**12.1**
Supply of Plant, Materials and Labour	**8.1**
Surfaces Requiring Reinstatement	**48.4**
Suspension, Engineer's Determination	**40.2**
Suspension lasting more than 84 days	**40.3**
Suspension of Work	**40.1**
Taking Over Certificate	**48.1**
Taking Over of Sections or Parts	**48.2**
Tender Documents	**11.1**
Tender, Sufficiency of	**12.1**
Termination of Contract by Employer	**63.1**
Termination of Contract by Employer, Assignment of Benefit	**63.4**
Terms of Insurance	**25.1**
Tests, Cost of	**36.3**
Tests not Provided for - Cost of	**36.4**
Third Party Insurance	**23.1**
Time for Completion	**43.1**
Time for Completion, Extension of	**44.1**
Time for Payment	**60.10**
Traffic, Extraordinary	**30.1**
Traffic, Interference with	**29.1**
Traffic, Waterborne	**30.4**
Transport of Contractor's Equipment and Temporary Works	**30.2**
Transport of Materials and Plant	**30.3**
Uncovering Work and Making Openings	**38.2**
Unfulfilled Obligations	**62.2**
Urgent Remedial Work	**64.1**

© FIDIC 1987

Index

Clause

Valuation at Date of Termination by the Employer	**63.2**
Variations	**51.1**
Variations, Daywork Basis	**52.4**
Variations, Exceeding 15 per cent	**52.3**
Variations, Instructions for	**51.2**
Variations, Power of the Engineer to Fix Rates	**52.2**
Variations, Valuation of	**51.3**
Vouchers, Production of	**58.3**
War, Outbreak of	**20.4**
Watching and Lighting, etc.	**19.1**
Waterborne Traffic	**30.4**
Work, Examination of Before Covering Up	**38.1**
Work, Improper, Removal of	**39.1**
Working Hours, Restriction of	**45.1**
Workmanship, Quality of	**36.1**
Workmen, Accident or Injury to	**24.1**
Works, Care of	**20.1**
Works, Completion of (Defects Liability Certificate)	**62.1**
Works, Commencement of	**41.1**
Works, Insurance of	**21.1**
Works, Remedying of Defects	**49.2**
Works, Time for Completion of	**43.1**
Works to be Measured	**56.1**
Work, Suspension of	**40.1**
Work to be in Accordance with the Contract	**13.1**

© FIDIC 1987

SECTION 3

CONDITIONS OF CONTRACT

PART II – CONDITIONS OF PARTICULAR APPLICATION

SECTION 3

PART II - CONDITIONS OF PARTICULAR APPLICATION

Notes on the Conditions of Particular Application

The clause numbers in this section correspond to those in the previous Section (Part I—General Conditions of Contract), except for clauses with numbers higher than 72. These conditions supplement the provisions in the General Conditions of Contract, and where applicable, the provisions are amended in line with the conditions under this Section.

Sub-Clause 1.1 (a) Definitions

(i) The Employer is The Bhutan Power Corporation Limited (BPC).

(iv) The Engineer is Bhutan Power Corporation Limited. For the purpose of this Contract, the terms “Engineer” and “Employer” shall be treated synonymous.

Subpara (a)(iv) is also amended by the addition of the following words after the word "Conditions":

"or any other competent person appointed by the Employer, and notified to the Contractor, to act in replacement of the Engineer."

Subpara (b)(v) of Sub-Clause 1.1 is amended by the addition of the following words at the end :

The word 'Tender' is synonymous with 'Bid' and the words 'Tender Documents' with 'Bidding Documents'."

Clause 2 Engineer and Engineer's Representative

For purposes of this Contract, the terms "Engineer" and "Employer" shall be treated synonymous. As such Clauses 2.1 to 2.6 stand deleted.

Sub-Clause 5.1 Language and Law

(a) The language is the English language.

(b) The law is that in force in the Kingdom of Bhutan.

Sub-Clause 5.2 Priority of Contract Documents

Delete the documents listed 1 - 6 and suGSTitute:

(1) The Contract Agreement;
(2) The Letter of Acceptance;
(3) The Tender;
(4) The Conditions of Contract Part II;
(5) The Conditions of Contract Part I;
(6) The Specifications;
(7) The Priced Bill of Quantities.
(8) Schedules of Supplementary Information

Sub-Clause 10.1 Performance Security

Replace the text of Sub-Clause 10.1 with the following:

"The Contractor shall provide security for his proper performance of the Contract to the Employer within 28 days after receiving the Letter of Acceptance. The Performance Security shall be for 10% of the Contract Amount and shall be in the form of a Bank Guarantee, issued by a bank/financial institution located in Bhutan. When providing

such security to the Employer, the Contractor shall notify the Engineer of so doing.

"Without limitation to the provisions of the preceding paragraph, whenever the Engineer determines an addition to the Contract Price as a result of a change in cost and/or legislation or as a result of a variation amounting to more than 20 percent of the portion of the Contract Price payable in a specific currency, the Contractor, at the Engineer's written request, shall promptly increase the value of the performance security in that currency by an equal percentage."

Sub-Clause 10.2 Period of Validity of Performance Security

Replace the text of Sub-Clause 10.2 with the following:
"The Performance Security shall be valid until 30 days beyond the successful completion and issue of "Taking Over Certificate of the whole of the works under the contract and for any extension thereto".

Add Sub-Clause 10.4 Cost and other aspects of Securities

The cost of complying with the requirements of all Bank Guarantees / Securities for this Contract shall be borne by the Contractor. All Bank Guarantees under this Contract shall be furnished from banks/financial institutions located in Bhutan.

Sub-Clause 14.1 Program to be Submitted

"The time within which the program shall be submitted shall be twenty-one (21) days."

Sub-Clause 14.3 Cash Flow Estimate to be Submitted

"The time within which the detailed cash flow estimate shall be submitted shall be twenty-one (21) days."

Sub-Clause 15.2 Language Ability of Contractor's Representative

Add the following Sub-Clause 15.2:

"If the Contractor's authorised representative is not, in the opinion of the Engineer, fluent in the English language, the Contractor shall have available on site at all times a competent interpreter to ensure the proper transmission of instructions and information."

Sub-Clause 16.3 Language Ability of Superintending Staff

Add the following Sub-Clause 16.3

"A reasonable proportion of the Contractor's superintending staff shall have a working knowledge of the English language, or the Contractor shall have available on site at all times a sufficient number of competent interpreters to ensure the proper transmission of instructions and information."

Sub-Clause 19.1 Safety, Security and Protection of the Environment

Add at the beginning of the clause: "Contractor should note that some specific measures may be required during construction of the Works for the protection of the environment.

Sub-Clause 20.4 Employer's Risks

Sub-Clause 20.4 is amended to read as follows:

The Employer's risks are

(a) Insofar as they directly affect the execution of the Works in the country where the Permanent Works are to be executed:

(i) war and hostilities (whether war be declared or not), invasion, act of foreign enemies;

(ii) rebellion, revolution, insurrection, or military or usurped power, or civil war;

(iii) ionizing radiations, or contamination by radioactivity from any nuclear fuel, or from any nuclear waste from the combustion of nuclear fuel, radioactive, toxic explosive or other hazardous properties of any explosive nuclear assembly or nuclear component thereof;

(iv) pressure waves caused by aircraft or other aerial devices travelling at sonic or supersonic speeds;

(v) riot, commotion or disorder, unless solely restricted to the employees of the Contractor or of his Sub-contractors and arising from the conduct of the Works;

(b) Loss or damage due to the use or occupation by the Employer of any Section or part of the Permanent Works, except as may be provided for in the Contract;

(c) Loss or damage to the extent that it is due to the design of the Works, other than any part of the design provided by the Contractor or for which the Contractor is responsible; and

(d) Any operation of the forces of nature (insofar as it occurs on the Site) which an experienced contractor:

(i) Could not have reasonably foreseen, or

(ii) Could reasonably have foreseen, but against which he could not reasonably have taken

appropriate measures to prevent loss or damage to physical property occurring.

Sub-Clause 21.1 Insurance of Works and Contractor's Equipment

Add the following words at the end of sub-paras (a) and (b) of Sub-Clause 21.1:

", it being understood that such insurance shall provide for compensation to be payable in currencies required to rectify the loss or damage incurred. The Contractor has to ensure that insurance coverage for the Project is made through a recognized and authorised Insurance company in Bhutan, acceptable to the Employer."

Sub-Clause 21.2 Scope of Cover

Para (a) of Sub-Clause 21.2 is amended by the deletion of the words "….. from the start of work at the Site….." and by the substitution therefor of the words"… from the first working day of the Commencement of Works …"

Sub-Clause 21.4 Exclusions

Sub-clause 21.4 is amended to read as follows:

"There shall be no obligation for the insurances in Sub-Clause 21.1 to include loss or damage caused by the risks listed under Sub-Clause 20.4 paras a) (i) to (iv)."

Sub-Clause 25.1 Evidence and Terms of Insurances

Sub-Clause 25.1 is amended by inserting the words "---as soon as practicable after the respective insurances have been taken out but, in any case,---" before the words "---prior to start of work at Site---"

Clause 34

Add the following sub-clauses.

Sub-Clause 34.2 Rates of Wages And Conditions of Labour

The Contractor shall pay rates of wages and observe conditions of labour not less favourable than those established for the trade or industry where the work is carried out. In the absence of any rates of wages or conditions of labour so established, the Contractor shall pay rates of wages and observe conditions of labour which are not less favourable than the general level of wages and conditions observed by other employers whose general circumstances in the trade or industry in which the Contractor is engaged are similar.

Sub-Clause 34.3 Repatriation of Labour

The Contractor shall be responsible for the return to the place where they were recruited or to the domicile of all such persons as he recruited and employed for the purposes of or in connection with the Contract and shall maintain such persons as are to be so returned in a suitable manner until they shall have left the site or, in the case of persons who are not nationals of and have been recruited outside Bhutan shall have left Bhutan.

Sub-Clause 34.4 Housing for Labour

Save insofar as the Contract otherwise provides, the Contractor shall provide and maintain such accommodation and amenities as he may consider necessary for all his staff and labour, employed for the purposes of or in connection with the Contract, including all fencing, water supply (both for drinking and other purposes), electricity supply, sanitation, cookhouses, fire prevention and firefighting equipment, air conditioning, cookers, refrigerators, furniture and other requirements in connection with such accommodation or amenities. On completion of the Contract, unless otherwise agreed with the Employer, the temporary camps/ housing provided by the Contractor shall be removed and the site reinstated to its original condition, all to the approval of the Engineer.

Sub-Clause 34.5 Accident Prevention Officer; Accidents

The Contractor shall have on his staff on Site an officer dealing only with questions regarding the safety and protection against accidents of all staff and labour. This officer shall be qualified for this work and shall have the authority to issue instructions and shall take protective measures to prevent accidents.

Sub-Clause 34.6 Health and Safety

Due precautions shall be taken by the Contractor and at his own cost, to ensure the safety of his staff and labour and, in collaboration with and to the requirements of the local health authorities, to ensure that medical staff, first aid equipment and stores, sick bay and suitable ambulance service are available at the camps, housing and on the Site at all times throughout the period of the Contract and that suitable arrangements are made for the prevention of epidemics and for all necessary welfare and hygiene requirements.

Sub-Clause 34.7 Measures Against Insect and Pest Nuisance

The Contractor shall at all times take the necessary precautions to protect all staff and labour employed on the Site from insect nuisance, rats, and other pests and reduce the dangers to health and the general nuisance caused by the same. The Contractor shall provide his staff and labour with suitable prophylactics for the prevention of malaria, and take steps to prevent the formation of stagnant pools of water. He shall comply with all the regulations of the local health authorities in these respects and shall in particular arrange to spray thoroughly with approved insecticide all buildings erected on the Site. Such treatment shall be carried out at least once a year or as instructed by the Engineer. The Contractor shall warn his staff and labour of the dangers of bilharzia and wild animals.

Sub-Clause 34.8 Epidemics

In the event of any outbreak of illness of an epidemic nature, the Contractor shall comply with and carry out such regulations, orders and requirements as may be made by the Government or the local medical or sanitary authorities, for the

purpose of dealing with and overcoming the same.

Sub-Clause 34.9 Burial of the Dead

The Contractor shall make any necessary arrangements for the transport, to any place as required for burial or any other last rites, of any of his expatriate employees or members of their families who may die in Bhutan. The Contractor shall also be responsible, to the extent required by the local regulations, for making any arrangements with regard to burial or any other last rites of any of his local employees who may die while engaged upon the Works.

Sub-Clause 34.10 Supply of Foodstuffs

The Contractor shall arrange for the provision of a sufficient supply of suitable food at reasonable prices for all his staff and labour, or his Subcontractors, for the purposes of or in connection with the Contract.

Sub-Clause 34.11 Supply of Water

The Contractor shall, so far is reasonably practicable, having regard to local conditions, provide on the Site an adequate supply of drinking and other water for the use of his staff and labour.

Sub-Clause 34.12 Alcoholic Liquor Or Drugs

The Contractor shall not, otherwise than in accordance with the Statutes, Ordinances and Government Regulations or Orders for the time being in force, import, sell, give, barter, or otherwise dispose of any alcoholic liquor or drugs, or permit or suffer any such importation, sale, gift, barter or disposal by his Subcontractors, agents, staff or labour.

Sub-Clause 34.13 Arms and Ammunition

The Contractor shall not give, barter, or otherwise dispose of any arms or ammunition of any kind to any person or persons or permit or suffer the same as aforesaid.

Sub-Clause 34.14 Festivals and Religious Customs

The Contractor shall have due regard to all recognised festivals, days of rest, and religious and other customs in all dealings with his staff and labour.

Sub-Clause 34.15 Disorderly Conduct

The Contractor shall at all times take all reasonable precautions to prevent any unlawful, riotous, or disorderly conduct by or amongst his staff and labour and to preserve peace and protect persons and property in the neighbourhood of the Works against the same.

Clause 35

Add the following sub-clauses.

Sub-Clause 35.2 Records of Safety and Health

The Contractor shall maintain such records and make such reports concerning the safety, health, and welfare of persons and damage to property as the Engineer may prescribe from time to time.

Sub-Clause 35.3 Reporting of Accidents

The Contractor shall report to the Engineer details of any accidents as soon as possible after their occurrence. In the case of any fatality or serious accident, the Contractor shall, in addition, notify the Engineer immediately by the quickest available means.

Clause 36

Add the following Sub-Clause.

Sub-Clause 36.6 Blasting Material

All the materials required to complete the works shall be arranged by the Contractor. Only blasting materials shall be arranged and issued by the Employer. Employer would make necessary arrangement for procurement and issue of such explosive materials on demand from the Contractor at the State Trading Corporation of Bhutan Limited (STCBL) or other approved supplier of RGOB. The cost for the explosives will be borne by the Contractor.

It shall be the responsibility of the Contractor to arrange for picking up the materials from State Trading Corporation of Bhutan Limited (STCBL) or other approved supplier of RGOB to the work place, storage and restricted use. The record of use of blasting material shall be maintained by the Contractor, duly certified by the Employer, and under no circumstances shall the blasting material used without prior intimation to the Employer. On completion of the Works, it is the responsibility of the Contractor to return the material to the original supplier, under intimation to the Employer.

Sub-Clause 43.1 Time for Completion

Add the following at the end.

"The Commencement Date shall be the date of Signing of Contract Agreement, unless otherwise specifically indicated".

Sub-Clause 47.1 Liquidated Damages for Delay

Add the following at the end.

"The applicable rate and the ceiling indicated in the Appendix to Bid for the Liquidated Damages shall be applicable on the Total Contract Price, unless the Contract provides for partial take-over and/or the Employer takes over part of the works for whatsoever reason. Such partial take-over is only at the discretion of the Employer for its own use and shall not be construed as a ground for request by the Contractor for partial takeover. In the event of such provision or partial take-over, the provisions under sub-clause 47.2 shall govern.

Sub-Clause 48.1 Taking-Over Certificate

Add the following at the end.

"Where the Scope of Work under the Contract covers Testing and Commissioning, in the absence of any specific provisions

elsewhere in the Specifications, the following provisions shall apply.

(i) In case such testing and commissioning works could not be completed due to non-readiness of other works not in the Scope of the Contractor, the Employer shall issue to the Contractor a provisional Taking-Over Certificate on suGSTantial completion of the works (excluding such testing and commissioning).

(ii) Issuance of such Taking-Over Certificate pursuant to (i) above does not absolve the Contractor to complete the Testing and Commissioning works if the notice of readiness by the Employer pursuant to (i) above is issued within 90 days of such Take-Over.

(iii) The Testing and Commissioning works shall be commenced by the Contractor within 15 days of notice of the Employer about the readiness of other works required for such testing and commissioning but not in the Scope of the Contractor and completed within the scheduled time duration provided in the original Bar Chart for such activity. Delay in completion of the same shall attract Liquidated Damages as per relevant clauses of the Contract, notwithstanding the issuance of a provisional Taking-Over Certificate pursuant to (i) above.

(iv) The Defects Liability period shall be reckoned from the date of system commissioning.

(v) In the event the notice for readiness for Testing and Commissioning is not issued by the Employer within 90 days indicated in (ii) above, the same shall be carried out by the Contractor at mutually convenient time without any additional cost implications to the Employer. However, the Contractor will not be liable for any Liquidated Damages.

Clause 49

Add the following Sub-Clause.

Sub-Clause 49.5 Extension of Defects Liability

The provisions of this Clause shall apply to all replacements or renewals of Plant carried out by the Contractor to remedy defects and damages as if the replacements and renewals had been taken over on the date they were completed. The Defects Liability Period for the Works shall be extended by a period equal to the

period during which the Works cannot be used by reason of a defect or damage. If only part of the Works is affected, the Defects Liability Period shall be extended for that part. In neither case shall the Defects Liability period extend beyond two years from the date of taking over.

When progress in respect of Plant has been suspended under Clause 40, the Contractor's obligations under this Clause shall not apply to any defects occurring more than one year after the Time for Completion established on the date of the Letter of Acceptance.

Sub-Clause 52.2 Power of Engineer To Fix Rates

Add a final sentence to the first paragraph as follows:

Provided further that no change in the rate or price for any item contained in the Contract shall be considered unless such item accounts for an amount more than 1% of the Contract Price, and the actual quantity of work executed under the item exceeds or falls short of the quantity set out in the Bill of Quantities by more than 20%. Quantities in excess of 20% shall be priced at a fair and reasonable rate determined by the Engineer, on the basis of materials, labour, use of construction equipment, etc., to execute the item. Unless notice of such intention of applying rates different from those in the contract is given by either party within 14 days of knowledge of such variation or the execution of works, it is deemed that both parties consent to carry out the works as per the rates in the Contract.

Clause 59.4(c) Payments to Nominated Sub-contractors

Not applicable

Clause 60 Certificates and Payment

Clause 60 of the General Conditions is deleted, and the following Sub-Clauses 60.1 to 60.16 are suGSTituted therefor:

Sub-Clause 60.1 Terms of Payment Equipment

Payment for the supply of equipment will be made as under.

(a) 10 % advance pursuant to sub clause 60.9 after establishment of project office and posting of Project Manager of contactor.

(b) 80% [90% if no advance is claimed by the Contractor] Payment against delivery of equipment/materials as quoted in Bill of Quantities. The invoice for claiming this payment should be accompanied by the following documents.

(i) Proof of dispatch / delivery: Submission of entry proof in Bhutan duly certified by the Revenue & Custom Department.
(ii) Contractor's detailed invoice giving full particulars of the equipment/material.
(iii) Detailed packing list.
(iv) Lorry Receipt.
(v) Approved Test Certificates and dispatch clearance of the Employer.
(vi) A comprehensive statement giving the status of supplies made and payments due and received.

(c) Balance 10% Payment shall be released after the "Taking over" of the works and issuance of Taking Over Certificate by the Employer and submission of Bank Guarantee by the Contractor of equivalent amount to cover defect liability period or on expiry of Defects Liability Period.

Sub-Clause 60.2 Terms of Payment Erection

Payment for the Erection of Equipment, along with other associated works, will be made as under:

(a) 10 % advance pursuant to sub clause 60.9, after establishment of project office and posting of Project Manager of contractor.

(b) 80% [90% if no advance is claimed by the Contractor]: This payment would be made periodically in each quarter on presentation of the erection works invoice giving full details of the work done during the quarter along with an updated statement showing the status of payments due and received.

(d) The Balance of 10% shall be released on the expiry of the Defects Liability Period and on submission of a Bank Guarantee of an equivalent amount to cover the defect liability period, pursuant to sub-clause 60.8 or on the expiry of the Defects Liability Period.

Sub-Clause 60.3 Quarterly Statement

The Contractor shall submit three copies of a statement to the Engineer at the end of each quarter, in a tabulated form approved by the Engineer, showing the amounts to which the Contractor considers himself to be entitled. The statement shall include the following items, as applicable, which shall be taken into account in the sequence listed:

(a) the estimated contract value of the Temporary and Permanent Works executed up to the end of the quarter in question, at base unit rates and prices and in

bid currency;

(b) the actual value certified for payment for the Temporary and Permanent Works executed up to the end of the previous quarter, at base unit rates and prices and in bid currency;

(c) the estimated contract value at base unit rates and prices of the Temporary and Permanent Works for the quarter in question, in bid currency, obtained by deducting (b) from (a);

(d) the value of any variations executed up to the end of the quarter in question, less the amount certified in the previous Interim Payment Certificate, expressed in the relevant amount of bid currency, pursuant to Clause 52;

(e) amounts approved in respect of Daywork executed up to the end of the quarter in question less the amount for Daywork certified in the previous Interim Payment Certificate, indicating the amount of bid currency as determined from the Daywork Schedule of the Bill of Quantities.

(f) amounts reflecting changes in cost and legislation, pursuant to Clause 70, expressed in the relevant amount of bid currency.

(g) any credit or debit for the month in question in respect of materials and Plant for the Permanent Works, in the relevant amounts, in foreign and local currencies, and under the conditions set forth in Sub-Clause 60.5;

(h) any amount to be withheld under the retention provisions of Sub-Clause 60.7, determined by applying the percentage set forth in Sub-Clause 60.7 to the amount in bid currency due under paragraphs 60.3 (c), (d), (e) and (f);

(i) Any amounts to be deducted as repayment of the Advance under the provisions of Sub-Clause 60.9; and

(j) any other sum, expressed in the applicable currency, to which the Contractor may be entitled under the Contract.

Sub-Clause 60.4 Quarterly Payment

a) The said statement shall be approved or amended by the Engineer in such a way that, in his opinion, it reflects the amounts due to the Contractor in accordance with the

Contract, after deduction, other than pursuant to Clause 47, of any sums which may have become due and payable by the Contractor to the Employer. In cases where there is a difference of opinion as to the value of any item, the Engineer's view shall prevail. Within 28 days of receipt of the quarterly statement referred to in Sub-Clause 60.3, the Engineer shall determine the amounts due to the Contractor and shall issue to the Employer and the Contractor a certificate herein called "Interim Payment Certificate", certifying the amounts due to the Contractor.

b) Provided that the Engineer shall not be bound to certify any payment under this sub-clause if the net amount thereof, after all retentions and deductions would be less than the Minimum Amount of Interim Payment Certificates stated in the Appendix to Bid.

Notwithstanding the terms of this Clause or any other Clause of the Contract, no amount will be certified by the Engineer for payment until the performance security has been provided by the Contractor and approved by the Employer.

Sub-Clause 60.5 Materials and Plant for the Permanent Works

With respect to materials and plant brought by the Contractor to the Site for incorporation in the Plant Permanent works, the Contractor shall (i) receive a credit in the month in which these materials and Plant are brought to the Site and (ii) be charged a debit in the month in which they are incorporated in the Permanent Works, both such credit and debit to be determined by the Engineer in accordance with the following provisions:

(a) no credit shall be given unless the following conditions shall have been met to the Engineer's satisfaction:

(i) the materials and plant are in accordance with the specifications for the Works;

(ii) the materials and plant have been delivered to the Site and are properly stored and protected against loss, damage or deterioration;

(iii) The Contractor's records of the requirements, orders, receipts and use of materials and Plant are kept in a form approved by the Engineer, and such records are available for inspection by the Engineer;

(iv) The Contractor has submitted a statement of his cost of acquiring and delivering the materials and Plant to the Site, together with such documents as may be required for the purpose of evidencing such cost; and

(v) The origin of the materials and Plant and the currencies of payment therefor are as indicated in the Bid.

(b) the amount to be credited to the Contractor shall be the equivalent of 75 percent of the Contractor's reasonable cost of the materials and Plant delivered to the Site, as determined by the Engineer after review of the documents listed in paragraph (a) (iv) above, as determined by the Engineer.

(c) the amount to be debited to the Contractor for any materials and plant incorporated into the Permanent Works shall be equivalent to the credit previously granted to the Contractor for such materials and plant pursuant to Sub-Clause (b) above, as determined by the Engineer; and

(d) the currencies in which the respective amounts shall be credited or debited as set forth above shall be determined by the Engineer, provided (i) that in the case of a credit, the currencies shall be those listed in the Bid for the relevant item of materials or Plant; and (ii) that in the case of a debit, the currencies shall be those in which the credit for the respective item of materials or plant had been given.

Sub-Clause 60.6
Place of Payment

Payments to the Contractor by the employer shall be made in the currency in which the Contract Price is payable, into a bank account of a contractor within Bhutan. All bank charges towards effecting the payment to the Contractor as above, including but not limited to Bank Charges for preparation of draft / cheque and / or transfer shall be at the cost of the Contractor.

Sub-Clause 60.7
Retention Money

A retention amounting to 10 percent of the amounts due in each currency, determined in accordance with the procedure set out in Sub-clause 60.3 (h) shall be made by the Engineer in the first and following Interim Payment Certificates.

Sub-Clause 60.8
Payment of Retention Money

Upon the issue of the Taking-Over Certificate with respect to the whole of the Works, half of the Retention Money, or upon the issue of a Taking-Over Certificate with respect to a Section or part of the Permanent Works only such proportion thereof as the Engineer determines having regard to the relative value of such Section or part of the Permanent Works, shall be certified by the Engineer for payment to the Contractor.

Upon the expiration of the Defects Liability Period for

the Works the other half of the Retention Money shall be certified by the Engineer for payment to the Contractor (or return of the bank guarantee, as the case may be). Provided that, in the event of different Defects Liability Periods being applicable to different Sections or parts of the Permanent Works pursuant to Clause 48, the expression "expiration of the Defects Liability Period" shall, for the purposes of this Sub-Clause, be deemed to mean the expiration of the latest of such periods.

Provided also that if at such time, there shall remain to be executed by the Contractor any work instructed, pursuant to Clauses 49 and 50, in respect of the Works, the Engineer shall be entitled to withhold certification until completion of such work of so much of the balance of the Retention Money as shall, in the opinion of the Engineer, represent the cost of the work remaining to be executed.
The Bank Guarantee for Defect Liability, if applicable, shall be furnished from banks/financial institutions located in Bhutan.

Sub-Clause 60.9 Advance Payment

(a) The Employer will make an interest-free advance payment to the Contractor exclusively for the costs of mobilization in respect of the Works in an amount equivalent to 10 percent of the relevant components of the Contract Price. Payment of such advance amount will be due under separate certification by the Engineer after (i) execution of the Form of Agreement by the parties hereto; (ii) provision by the Contractor of the performance security in accordance with Sub-Clause 10.1; (iii) provision by the Contractor of an unconditional bank guarantee in a form and by a bank acceptable to the Employer in an amount equal to the advance payment. Such bank guarantee shall remain effective until the advance payment has been repaid pursuant to paragraph; and (iv) after the establishment of the project office and posting of the Project Manager of the contractor.

The Bank Guarantee for Advance Payment shall be furnished from banks/financial institutions located in Bhutan.

(b) The advance payment shall be repaid through percentage deductions from the interim payments certified by the Engineer in accordance with the Clause. Deductions shall commence in the first Interim Payment Certificate, and shall be made at the rate of 10 percent of

the amount of all Interim Payment Certificates in the currency of the advance payment until such time as the advance payment has been repaid; always provided that the advance payment shall be completely repaid prior to the time when 80 percent of the Contract Price has been certified for payment.

Sub-Clause 60.10 Time of Payment

The amount due to the Contractor under any Interim Payment Certificate issued by the Engineer pursuant to this Clause, or to any other term of the Contract, shall subject to Clause 47, be paid by the Employer to the Contractor within 56 days after the Contractor's quarterly statement has been submitted to the Engineer for certification or, in the case of the Final Certificate pursuant to Sub-Clause 60.13, within 84 days after the agreed Final Statement and written discharge have been submitted to the Engineer for certification.

Sub-Clause 60.11 Correction of Certificates

The Engineer may by any Interim Payment Certificate make any correction or modification in any previous Interim Payment Certificates which has been issued by him, and shall have authority, if any work is not being carried out to his satisfaction, to omit or reduce the value for such work in any Interim Payment Certificate.

Sub-Clause 60.12 Statement at Completion

Not later than 84 days after the issue of the Taking-Over Certification in respect of the whole of the Works, the Contractor shall submit to the Engineer three copies of a Statement at Completion with supporting documents showing in detail, in the form approved by the Engineer.

(a) The final value of all work done in accordance with the Contract upto the date stated in such Taking-Over Certificate;
(b) Any further sums which the Contractor considers to be due; and
(c) an estimate of amounts which the Contractor considers will become due to him under the Contract.

The estimated amounts shall be shown separately in the Statement at Completion. The Engineer shall certify payment in accordance with Sub-Clause 60.4.

Sub-Clause 60.13 Final Statement

Not later than 56 days after the issue of the Defects Liability Certificate pursuant to Sub-Clause 62.1, the Contractor shall submit to the Engineer for consideration six copies of a draft final statement with supporting documents showing in detail, in the form approved by the Engineer,

(a) The value of all work done in accordance with the Contract; and

(b) Any further sums which the Contractor considers to be due to him under the Contract or otherwise.

If the Engineer disagrees with or cannot verify any part of the draft final statement, the Contractor shall submit such further information as the Engineer may reasonably require and shall make such changes in the draft as may be agreed between them. The Contractor shall then prepare and submit to the Engineer the final statement as agreed (for the purposes of these Conditions referred to as the "Final Statement").
If, following discussions between the Engineer and the Contractor and any changes to the draft final statement which may be agreed between them, it becomes evident that a dispute exists, the Engineer shall issue to the Employer an Interim Payment Certificate for those parts of the draft final statement which are not in dispute. The dispute shall then be settled in accordance with Clause 67. The Final Statement shall bear agreed upon settlement of the dispute.

Sub-Clause 60.14 Discharge

Upon submission of the Final Statement, the Contractor shall give to the Employer, with a copy to the Engineer, a written discharge confirming that the total of the Final Statement represents the full and final settlement of all monies due to the Contractor arising out of or in respect of the Contract. Provided that such discharge shall become effective only after the payment due under the Final Payment Certificate issued pursuant to Sub-Clause 60.15 has been made and the performance security referred to in Sub-Clause 10.1 has been returned to the Contractor.

Sub-Clause 60.15 Final Payment Certificate

Within 28 days after receipt of the Final Statement, and the written discharge, the Engineer shall issue to the Employer (with a copy to the Contractor) a Final Payment Certificate stating

(a) the amount which, in the opinion of the Engineer, if finally due under the Contract or otherwise, and

(b) after giving credit to the Employer for all amounts previously paid by the Employer and for all sums to which the Employer is entitled, other than Clause 47, the balance, if any, due

from the Employer to the Contractor or from the Contractor to the Employer as the case may be.

Sub-Clause 60.16 Cessation of Employer's Liability

The Employer shall not be liable to the Contractor for any matter or thing arising out of or in connection with the Contract or execution of the Works unless the Contractor has included a claim in respect thereof in his Final Statement and (except in respect of matters or things arising after the issue of the Taking-Over Certificate in respect of the whole of the Works) in the Statement at Completion referred to in Sub-Clause 60.12.

Sub-Clause 65.2 Special Risks

Sub-Clause 65.2 is amended to read as follows:

"The Special Risks are the risks defined under para. (a), sub paras. (i) to (v) of Sub-Clause 20.4".

Sub-Clause 68.2 Notice to Employer and Engineer

For the purpose of this Sub-clause the respective addresses are:

(a) **The Employer:**
The Director
Construction & Procurement Department
Bhutan Power Corporation Limited
Thimphu, Bhutan

Contact
Mobile:+975 17614829
Email: sangaytenzin1@bpc.bt

The Engineer:
The Senior Project Manager
CPO-Mongar
Construction Division
Construction & Procurement Department
Bhutan Power Corporation Limited
Mongar, Bhutan

Contact
Mobile:+975 17 45 69 17
Email: sonam_tshering@bpc.bt

Sub-Clause 69.1 Default of Employer

In Sub-Clause 69.1(a), suGSTitute "56 days" for "28 days".

Clause 70 Changes in Cost and Legislation	Delete Clause 70 in its entirety and suGSTitute.
Sub Clause 70.1 Price Adjustment	All the Prices in the Contract are firm and no Price Variation / Price Adjustment is applicable. Thus the reference to any indices for Price Variation in the contract would not be applicable for this Contract.

Additional Clauses (*)

Clause 73 Taxation	
Sub-Clause 73.1 Foreign Taxation	The prices bid by the Contractor shall include all taxes, duties and other charges imposed inside and outside the Employer's country on the production, manufacture, sale and transport of the Contractor's Equipment, Plant, materials and supplies to be used on or furnished under the Contract, and on the services performed under the Contract. As per the norms of the Government of India, the GST is not applicable for the export of the materials to Bhutan; the same shall not be loaded in the offer.
Sub-Clause 73.2 Local Taxation	The price bid by the Contractor shall include all customs duties, import duties, business taxes, income and other taxes that may be levied in accordance with the laws and regulations in being as of the date 28 days prior to the closing date for submission of bids in the Employer's country on the Contractor's Equipment, Plant, materials and supplies (permanent, temporary and consumable) acquired for the purpose of the Contract and on the services performed under the Contract. Nothing in the Contract shall relieve the Contractor from his responsibility to pay any tax that may be levied in the Employer's country on profits made by him in respect of the Contract.
Sub-Clause 73.3 Custom Duty & Good and Services Tax	The Contractor shall be responsible for payment of all levies, royalties, taxes, etc., as applicable in Bhutan. Good and Services Tax (GST) and Customs Duty are applicable at the entry check post. The applicable GST/CD rates will have to be obtained by the Bidder from the relevant authorities before submission of Bids. The payment towards GST/CD will be made by BPC at actual against proof of payment at the check post subject to the ceiling of the value quoted by the Bidder against various items. However, in the event there is any change in GST/CD rates during the period of 28 days prior to

the deadline for submission of Bids till scheduled completion (delays in Contract execution, which are attributable to Contractor, will not be considered for payment towards any additional GST/CD) due to Royal Government of Bhutan (RGoB) regulations, the provisions of clause 13.4 of section 1, Instructions to Bidders shall govern for additional payment/recovery.

As far as possible, the Contractor shall procure the materials required for the construction works such as cement, steel rods etc., within Bhutan. However, in case if it is found necessary to procure materials from outside Bhutan, an indent shall have to be made by the Contractor and presented to Employer's Representative which will be examined and cleared for purchase by the Employer/ Engineer before initiating procurement process by the Contractor. The Contractor will have to pay the GST and CD at the entry check post and submit the following documents for reimbursement claims to Employer's Representative.

a) Original money receipt of Revenue and Customs Divisions.

b) Original source vendor invoice/ bill/ cash memo of the materials for which GST & Customs Duty is paid as reflected in the above receipt duly stamped by Custom authorities in Bhutan.

The reimbursement of GST however will not be applicable to goods/ materials procured within Bhutan.

In case of misuse of the permit/ material, suitable penal deduction shall be made from the Contractor's bill up to 5 times the GST / CD leviable on such materials.

On completion of works if it is observed that excess goods/materials have been procured by the Contractor, the GST/ Custom Duty reimbursed to the Contractor in case of these materials will have to be refunded to the Employer by the Contractor. These excess goods/ materials will be assessed based on the consumption statement entered in the Books of Measurement (MBs).

Sub-Clause 73.4 **Good & Services Tax** **Foreign Contractor Tax**	The Contractor will have to pay Good & Services Tax in Bhutan. Presently the applicable Foreign Contractor Tax is 5% and this will be deducted from the gross amount of the bills/ invoices. A Tax Deduction Certificate will be issued to the Contractor for the Tax Deducted at Source (TDS) by the Employer.
Sub-Clause 73.5 **Income Tax on Staff**	The Contractor's staff, personnel and labour will be liable to pay Personal Income Tax in Bhutan in respect of such of their salaries and wages as are chargeable under the laws and regulations in force, and the Contractor shall perform such duties in regard to such deductions thereof as may be imposed on him by such laws and regulations.
Sub-Clause 74.1 **Bribes**	If the Contractor, or any of his Subcontractors, agents or servants gives or offers to give to any person any bribe, gift, gratuity or commission as an inducement or reward for doing or forbearing to do any action in relation to the Contract or any other contract with the employer, or for showing or forbearing to show favour or disfavour to any person in relation to the Contract or to any other contract with the employer, then the Employer may enter upon the Site and the Works and expel the Contractor and the provisions of Clause 63 hereof shall apply as if such entry and expulsion had been made pursuant to that Clause.
Sub-Clause 75.1 **Termination of Contract for employer's Convenience**	The Employer shall be entitled to terminate this Contract at any time for the Employer's convenience after giving 56 days prior notice to the Contractor, with a copy to the Engineer. In the event of such termination, the Contractor (a) shall proceed as provided in Sub-Clause 65.7; and (b) shall be paid by the Employer as provided in Sub-Clause 65.8.
Clause 76	VOID
Sub-Clause 77.1 **Joint and Several Liability**	If the Contractor is a joint venture of two or more persons, all such persons shall be joint and severally bound to the Employer for the fulfillment of the terms of the Contract and shall designate one of such persons to act as a leader with authority to bind the joint venture. The composition or the constitution of the joint venture shall not be altered without the prior consent of the Employer.

Sub-Clause 78.1 Details to be Confidential	The Contractor shall treat the details of the Contract as private and confidential, save insofar as may be necessary for the purposes thereof, and shall not publish or disclose the same or any particulars thereof in any trade or technical paper or elsewhere without the previous consent in writing of the Employer or the Engineer. If any dispute arises as to the necessity of any publication or disclosure for the purpose of the Contract the same shall be referred to the decision of the Employer whose award shall be final.
Sub-Clause 79.1	Except in cases of criminal negligence or willful misconduct:
Limitation of Liability	(a) neither Party shall be liable to the other Party, whether in contract, tort, or otherwise, for any indirect or consequential loss or damage, loss of use, loss of production, or loss of profits or interest costs, which the other Party may suffer in connection with the Contract, other than specifically provided as any obligation of the Party in the Contract; and (b) the aggregate liability of the Contractor to the Employer, whether under the Contract, in tort or otherwise, shall not exceed the total Contract Price, provided that this limitation shall not apply to the cost of repairing or replacing defective equipment, or to any obligation of the Contractor to indemnify the Employer with respect to patent infringement. Clause 79.1 (b) is not applicable to this Bid.
Sub-Clause 80.1 Incentive against early completion of the project	If the contractor achieves completion of the whole of the works and takeover of the project prior to the project completion schedule, the Employer shall issue a certificate of appreciation and recognition.

SECTION 4
TECHNICAL SPECIFICATIONS
(Refer Volume – II)

PART I - GENERAL TECHNICAL REQUIREMENTS AND SCOPE OF WORKS

1.0 Project Description

a. Bhutan Power Corporation Limited (BPC) intends to construct a 1x66kV double circuit from Semtokha substation to Dechencholing Substation (loop-in loop-out (LILO) of existing 66 kV Dechencholing - Damji line), along with the necessary line termination works including supply of cables, struction of cable burial system, at Semtokha substation in Thimphu Dzongkhag, Bhutan. The primary objective of the project is to meet load demand at Dechencholing and grid strengthening in Thimphu. The transmission line traverses through Chang and Kawang gewog and runs parallel to Thimphu-Trongsa highway.

From the two 66 kV circuits originating at the Semtokha substation, one circuit will use ACSR Wolf conductors and will connect to Damji substation, while the other will use Aluminium Conductor Composite Core (ACSR Wolf equivalent) and will connect to the Dechencholing substation.

The circuit with ACSR Wolf conductors connecting to Damji substation will be terminated to Semtokha substation and all required termination works at Semtokha substation for this circuit will be included in the present scope of work.

However, the second circuit using ASCR Wolf equivalent ACCC conductors connecting to the Dechencholing substation will not be terminated at Semtokha substation at this stage. Its termination will be carried out only after the existing 66 kV Air-Insulated Switchgear (AIS) at Semtokha is upgraded to Gas-Insulated Switchgear (GIS).

The circuit configurations are illustrated below.

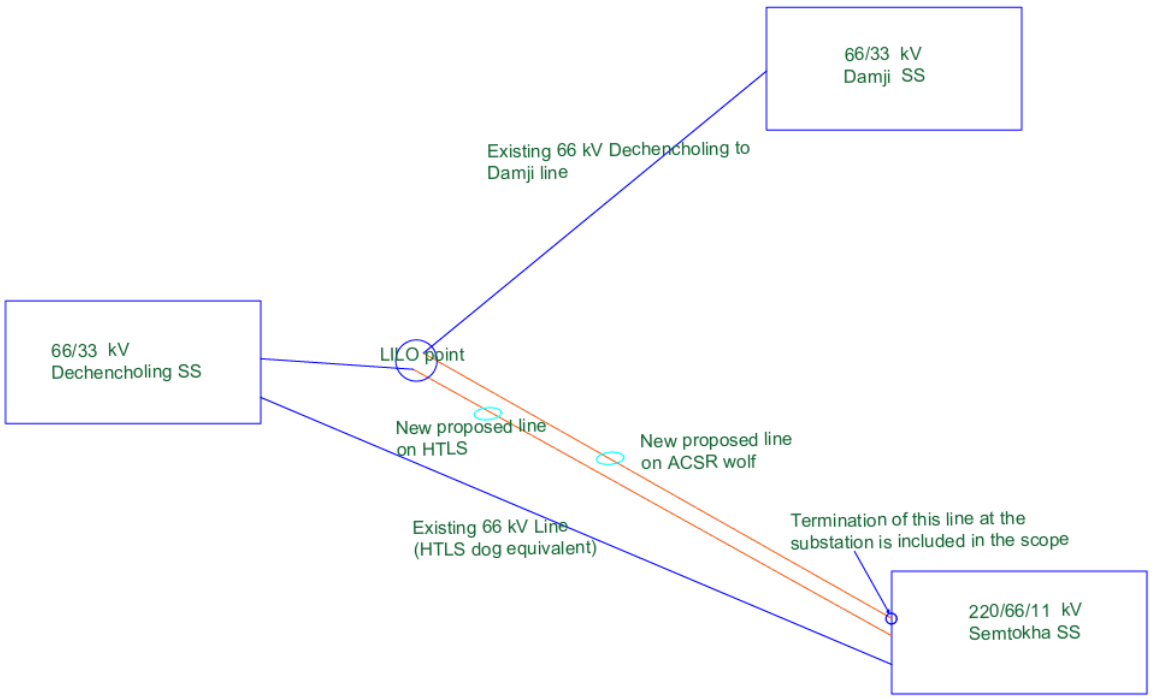

Overview of the Existing 66 kV system in Semtokha Substation:
Semtokha 66 kV switchyard includes:

1. 2x20MVA, 66/11kV distribution transformers
2. 2x50/63MVA, 220/66kV Power transformers
3. 1x40/50MVA, 220/66kV Power transformer
4. Bus coupler
5. 2x25MVAR capacitor bank
6. Line Bays: Dochula, Dechencholing, Olakha.

The identified 2x20 MVA , 66/11 kV Transformer Bay consists of:
1. Bus Isolator
2. Circuit Breaker
3. Current Transformer
4. Lightning arrestor

The circuit with ACSR wolf conductor connecting to Damji substation will be terminated at Semtokha substation in one of the existing 2x20 MVA, 66/11 kV transformer bay equipment. 1Cx 630 Sq.mm, 66 kV XLPE cables will be used from the double circuit dead-end tower to the switchyard equipment. The supply of the cables along with XLPE cable drop arrangement from transmission tower to ground, Transmission Line Arrestor (TLA), the construction of cable burial system and necessary arrangement at LA structure is included in this scope of work. Refer drawings for the tentative substation layout and section plan.

Key design considerations:

I. XLPE cable to air terminate at dead-end tower. Provided, there should be a Transmission Line Arrestor (TLA).
II. XLPE cable to air terminate at LA structure in the switchyard with single point bonding.
III. Cable short-circuit rating and bending radius to be verified during implementation.

Particular details relevant to this Project:

Sl.#	Description	Detail/data/information
1	Single/Double Circuit	Double Circuit line on Double Circuit Tower
2	Voltage Level	66 kV
3	Line Length(approx.)	12.3 km
4	Type of Conductor to be used	ACSR Wolf (1 ckt) and ACCC (ASCR Wolf Equivalent) 2nd Circuit) on 66kV D/C tower.
5	Steel	215.24 MT
6	Terrain Type	Mountainous
7	Snow or Non-Snow Zone	Non-Snow Zone
8	Closest Airport	Paro International Airport (Bhutan)

The particulars of the route are detailed in relevant portions of these tender documents.

Project Location and Layout:

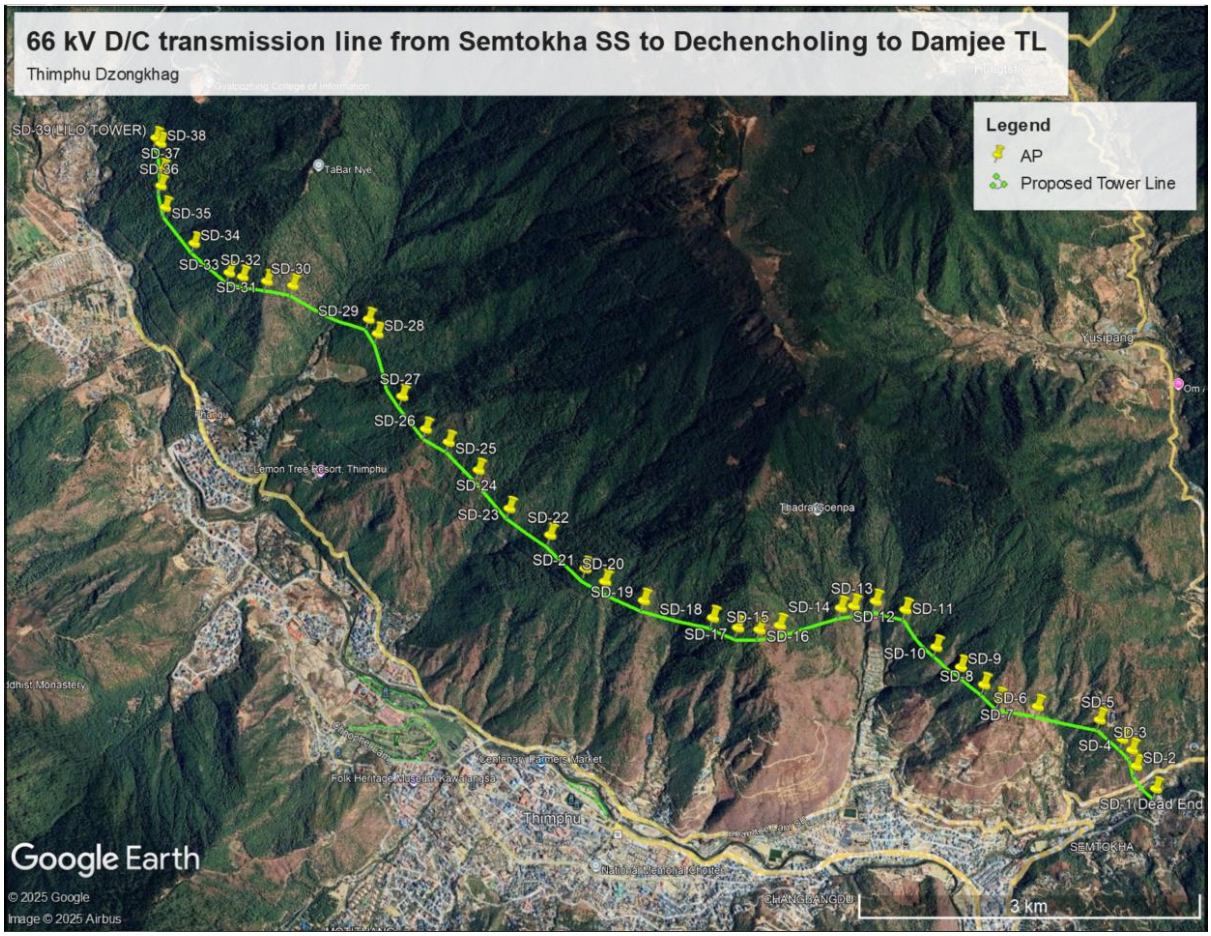

IV. The project duration shall be twelve (12) months.

1.2 Site/Service Conditions

The equipment/material to be supplied under this project shall be suitable for satisfactory continuous operation under the following local conditions as specified below unless otherwise indicated elsewhere:

Basic Design Parameter	**Basic Design Value**
Altitude above MSL	Approx 2400 meters
Ambient Air Temperature min Max	0.0°C 40.0°C
Everyday Temperature	32.0°C
Isokeraunic level	70
Annual Rainfall*	75-500 mm
Climate	The summer is moderately hot and winter is dry and cold.
Relative Humidity	20 – 100%
Seismic Acceleration Level Horizontal	0.1 g 0.05 g

Basic Design Parameter	Basic Design Value
Vertical	
Basic Wind Speed*1	47 m/s (As per IS 875 / 802)
Wind Zone	4 (As per IS 875 / 802)
Reference wind speed (IS802) (Maximum wind velocity for design *2)	34.18m/s (K=1.375; IS 802)
Design wind speed (IS 802)	34.18m/s (K_1=1, K_2=1)
Terrain Category	2 (As per IS 802)
Maximum solar radiation	1033.79 W/m^2 (MSL)
Reliability Level	1 (As per IS 802)
Earthquake Zone Category	5
Snow Incidence in Winter *3	0 mm

*Monsoon period is generally from May to September.
*1: Peak gust velocity (3 sec mean)
*2: Wind speed at 10m above ground and with an averaging period of 10min considers gust factor K=1.375
*3: Icing 12.5mm shall considered to design above 2500m MSL

This is a critical line in Mountainous terrain and as such no mid span jointing and repair sleeves shall be allowed.

1.3 Access

The general transmission line route traverses alongside Thimphu-Trongsa highway accessible to tower locations by foot paths as given in the Transmission Line Route map enclosed with these specifications. The nearest airport in Bhutan is Paro international airport. The approximate distance of major locations is as below:

Thimphu to Bhutan-India boarder gate (Jaigoan) = 176 km
Thimphu to Paro international Airport = 55 km

1.4 Geotechnical

1.4.1 The requirement of geotechnical study is indicated separately in the specification. If such study is included in the Scope of the Works, the Contractor shall carry out the geotechnical study along the transmission line route and submit one (1) copy (Both soft & hard) of the Soil Investigation/Geotechnical Study Report to the Employer for approval.

1.4.2 Where the geotechnical study is already carried out earlier, a copy of the same will be provided to the successful bidder.

2.0 Scope of Work

The work shall be a Turnkey Project including Supply, Construction, Testing & Commissioning of a 66kV D/C transmission line from Semtokha to Dechencholing. The Bidder shall carry out the detailed survey, check survey of the entire line route, and all the works

associated with the finalization of the tower locations, along with the type of tower to be used at each of the locations. The transmission line route map provides the locations of these towers.

The pre-designed towers and foundations shall be issued by Employer and the Contractor, under this tender is required to carry out all the works associated with the construction of the transmission line i.e foundation-casting, tower erection, stringing of conductors and OPGW along with the insulators/hardware as required, testing and commissioning. Line profile using PLS CAD and Stringing chart shall also be in the scope of the bidder but approved by the Employer. The work shall be carried out as per the designs/drawings furnished by the Employer.

The type of foundation to be cast shall be based on the geo-tech report provided by the Contractor, and the Contractor shall be responsible for the information provided therein. Based on the geo-tech data furnished by the Contractor, the appropriate type of foundation shall be adopted at the site. In the event the site parameters are at variance with the soil classification considered in the standard drawings provided by the Employer for different types of foundations, the Employer will provide the necessary modifications to the designs for such locations.

The stringing works shall be carried out by the Contractor based on the stringing chart to be approved by the Employer. The Contractor shall be responsible for ensuring that due care for the materials, like the conductor/OPGW/hardware etc., is taken, and any damages due to mishandling of the same shall be at the risk and cost of the Contractor.

The following is the Scope of Work under this Project:

i. Termination of one circuit from the terminal tower at Simtokha to the 66 kV Semtokha switchyard equipment (66/11 kV transformer bay) using 66 kV XLPE cables,/ including the construction of required arrangement for cable burial system.
ii. Detailed survey including route alignment, profiling by PLS-CADD software, tower spotting, optimization of tower locations, soil resistivity measurement & geotechnical investigation (including special foundation locations, viz. pile/well foundation locations.)
The detailed survey shall be carried out using Total stations, DGPS, etc. along the approved route alignment. As an alternative, the contractor may also use ALTM (Airborne Laser Terrain Modelling) techniques of equal or better accuracy for the detailed survey.
Bidders may however visit the line route to acquaint themselves with terrain conditions, approach/accessibility to the site, salient features of route and associated details of the proposed transmission lines. Employers may also arrange joint site visits of line routes in Bhutan for all the interested Bidders who intend to participate in the bidding and have purchased the bidding documents.
iii. Check survey shall be conducted to locate towers on the ground conforming to the approved profile and tower schedule. The contractor shall prepare detailed contouring/benching volume calculation sheets using Civil 3D/excel/or any other applicable applications of tower locations and submit tower schedule and line profile using PLS-CADD software including proposal of body/leg/chimney extension for approval by the Employer. All the documents should be submitted in saft copy as well.

The coordinates of all the tower locations shall also be recorded using GPS/DGPS of positional accuracy of at least 1m for easy relocation. The position of all tower locations shall be marked in the final digitized route alignment drawing with relative distances from any permanent benchmark.

Soil Investigation: The contractor shall also collect required data at each tower location in respect of soil strata, groundwater level, history of the water table in adjacent areas/surface water, and distance from the permanent benchmark (these details to be furnished in a tabulated form) and classify the suitable type of foundation at each tower location based on the data collected at each location, detailed soil investigations carried out at selected locations, etc.

iv. Cutting of trees and bushes for the survey, stringing, and foundation works and to achieve the required ground clearance and ROW.

v. De-stringing of the 1.2km of ACSR Wolf conductor including lowering of insulator strings, hardware fittings, arching horn, dampers, jumpers, etc all complete of all three phases of single circuit power conductor from LILO tower till Gantry of Dechencholing substation and transporting to the storeyard in Thimphu(Jamjee). Right of Way and way leave clearance shall be arranged by the Employer in according with work schedules. Employers will secure way leave and right of way in the Forest area and has already obtained the forest clearance.

vi. Manufacture, fabrication, galvanizing, supply, delivery, insurance, storage at site, transportation of materials to the construction site of all types of transmission line towers, including River crossing towers (wherever applicable) as per Employer design/drawings including fasteners, step bolts, hangers, D-shackles etc.

vii. All types of tower accessories like phase plate, circuit plate (wherever applicable), number plate, danger plate, anti-climbing device, and Bird guard (wherever applicable).

viii. Design and Supply of Conductors (ACSR WOLF and ACSR Wolf Equivalent ACCC), Insulators, OPGW, Hardware Fittings and their Accessories (ACSR WOLF and ACSR Wolf Equivalent ACCC).

ix. The work shall be taken up as a turnkey package; therefore, all the materials required for completing the works shall be sourced by the contractor.

x. Classification of foundation for different types of towers and casting of foundation (including special foundation locations, viz. pile/well foundation locations) for tower footings as per Employer supplied foundations drawing.

xi. Erection of towers, tack welding (where required) of bolts and nuts including supply and application of zinc-rich primer & two coats of enamel paint, tower earthing, fixing of insulator strings, stringing of conductors and earth wire/OPGW along with all necessary line accessories.

xii. Painting of towers (where required) & supply and erection/installation of span markers/LED signal and obstruction lights (wherever applicable) for aviation requirements (as required).

xiii. Testing and commissioning of the erected transmission lines; and

xiv. Supply of tools/equipment and accessories

xv. Other items not specifically mentioned in this Specification and/or Schedule of Prices but are required for the successful commissioning of the transmission line unless specifically excluded in the Specification.

xvi. Training shall be provided for up to six (6) Employer’s technicians on the use of stringing equipment and techniques certified by the ACCC technology owner. The venue shall be at bidders premises and areas of training shall be mutually agreed. The cost is deemed to be covered in the contract price.

2.1 The Employer shall provide engineering documents like sag tension calculation, tower spotting data, and single line and clearance diagrams. The Employer shall also provide structural drawings & Bill of Materials of all types of transmission line towers and their extensions, river crossing towers/special towers as required to the Contractor after placement of award, in sequence, suiting the project requirement. Similarly, the drawings for all types of foundations for the towers shall also be provided by the Employer to the Contractor. However, the shop drawings shall be prepared by the Contractor, if required without any additional cost to the employer.

2.2 The following shall be specifically noted:

a. The 66 kV double circuit towers shall be arranged with ACSR Wolf on the first circuit and ACCC (equivalent to ACSR Wolf) on the second circuit.The Contractor shall perform and submit supporting calculations demonstrating that installation of ACCC in Circuit 2 will not produce unbalanced loads (including static, wind, ice, and dynamic effects) requiring modification of tower members or foundations
b. The provisional quantities of fabricated & galvanized steel parts as per specifications required for towers, concrete, excavation volume & reinforcement steel for foundation and other items are given in the appropriate Schedule of Prices. However, the work shall be executed as per approved construction drawings. Payment of towers shall be made based on the **black weight** without galvanization and no separate payment will be made for galvanization.
c. The various items of work are described very briefly in the appropriate Schedule of prices. The various items of the Schedule of Prices shall be read in conjunction with the corresponding sections in the Technical Specifications, including amendments and additions, if any. The Bidder's quoted rates shall be based on the description of activities in the Schedule of Prices as well as other necessary operations required to complete the works detailed in these Technical Specifications.

d. The Unit rates quoted shall include minor details which are obviously and fairly intended, and which may not have been included in these documents but are essential for the satisfactory completion of various works.

e. The unit rate quoted shall be inclusive of all plant, equipment, men, material, skilled & unskilled labour, pandemic requirements, etc., essential for the satisfactory completion of various works.

f. All measurements for payment shall be in S.I. units, and lengths shall be measured in meters corrected to two decimal places. Areas shall be computed in square meters & volume in cubic meters rounded off to two decimals.

2.3 The Bidder shall submit his offer taking into consideration that the tower and foundation designs/drawings shall be developed/provided by the Employer, and design rights will be strictly reserved with the Employer. The bidder shall quote the unit rates for various items of towers and foundations as per units mentioned in the appropriate Schedule of Prices. However, payment of these items identified in the schedule of prices shall be made as follows:

A)	TOWER	

i)	Supply items	On supply of respective complete towers.
ii)	Erection items	On the erection of the respective complete tower.
B)	Foundation items:	On completion of respective foundations in all respects.

The payment to be made for towers/foundations shall be worked out based on the unit rates and approved Bill of Materials (BOM) for towers and quantities/volumes as per approved tower foundation drawings.

2.4 Supply of all the raw materials such as steel, zinc for galvanizing, reinforcement steel, cement, coarse and fine aggregates for tower foundation, coke and salt for tower earthing, any materials required for slack span works at substation end etc. are included in the Contractor's scope of supply.

This specification also includes the supply of Conductors (ACSR Wolf and ACSR Wolf Equivalent ACCC), Insulator, OPGW, hardware fitting and all types of accessories for conductors (ACSR Wolf and suitable for ACSR Wolf Equivalent ACCC) as per the specification. The contractor is required to procure and supply these line materials from the list of vendors enclosed as Annexure A with this specification. The technical description of these line materials is given in the relevant section of this specification.

2.5 Bidders shall also indicate in the offer the sources from where they propose to procure the fasteners, step bolts, hangers, D-shackles etc., tower accessories, aviation signal (if required) etc.

2.6 Stringing

a) The entire stringing work of the conductors and OPGW shall be carried out by tension stringing technique. The bidders shall indicate in their offer the sets of tension-stringing equipment they have in their possession and the sets of stringing equipment they would deploy exclusively for this project which under no circumstance shall be less than the number and capacity requirement indicated in Qualifying Requirements for Bidder. However, the Bidder having requisite experience has the freedom to use a drone/helicopter for stringing at own cost. The Bidder intending to use a helicopter shall furnish detailed description of the procedure, type & number of helicopter & accessories etc., to be deployed for stringing operation.
b) In hilly terrain and thick forest or areas with site constraints, where the deployment of a tension stringing machine is not possible, manual stringing may be adopted after getting approval from the employer's site engineer. The contractor shall deploy appropriate tools/equipment/machinery to ensure that the stringing operation is carried out without causing damage to the conductors/earth wire / OPGW conductor/earth wire /OPGW is installed at the prescribed sag-tension as per the approved stringing charts.
c) The stringing works include the slack span stringing between the last dead-end terminal substation gantries. The stringing of ACCC shall be performed under the supervision of the technology owner. The payment will be based on the unit rates in the contract for the supply and stringing works in the price schedule and no separate payment shall be made for deployment of ACCC stringing supervisor.

3.0 Units of Measurement

Metric units of measurement (System International) shall be used in all Contract documentation. Angular measurement shall be in degrees with 90 degrees comprising one right angle.

4.0 Standards & Codes

All equipment supplied under this Specification shall conform to the latest editions of the International Electrotechnical Commission (IEC) or Bureau of Indian Standards (BIS) Specifications. Alternative standards to IEC/ IS will only be accepted if the Contractor is able to satisfactorily demonstrate to the Employer prior to Contract Award that such standards are equal to or better than IEC/ BIS. Full details of differences, which affect the design or performance of the equipment, shall be stated in the Tender. However, structural/ civil Engineering design shall conform to the relevant latest BIS specifications.

5.0 Electrical Characteristics

5.1 High Voltage

Nominal System Voltage (kV)	66	132	220
Maximum system voltage kV	72.5	145	245
Basic Insulation Level (BIL) kV Peak (*)	325	550	1050
Rated one-minute power-frequency withstand voltage (kV rms) (*)	140	230	460
Rated short-time current (1 sec rms) kA	31.5	31.5	40
Rated Peak short-circuit current (peak value)kA	80	80	100

(*) These values apply up to 1000 m above Mean Sea Level (MSL).

5.2.1 Low Voltage

For the information of Bidders, the prevalent standard LV system in Bhutan has the following parameters.

Nominal System Voltage (V)	400/230 on load
Maximum system voltage (V)	424/244
System frequency (Hz)	50
Rated 1-minute power-frequency withstand Voltage (V)	3000
Rated impulse voltage withstand - peak (V)	7500

6.0 Nuts, Bolts & Washers

6.1 All lattice steel tower structural members shall be secured by means of nuts and bolts with washers. Nuts and heads of all bolts shall be of the hexagonal type and of uniform outline dimension.

The minimum size of bolts for all structural connections shall be 16mm diameter in mild steel - 12 mm bolts will not be accepted.

All bolts and screwed rods shall be galvanized, including the threaded portions. All nuts shall be galvanised with the exception of the threads, which shall be oiled. All bolts attaching insulator set droppers, U bolts, and earth conductor clamps to the towers shall be provided with extra thread length to accommodate two nuts and a washer in an approved manner. The screwed thread of any bolts or studs shall not form part of a shearing plane between members.

All washers shall be included under this Contract, including locking devices and anti-vibration arrangements, which are to be subject to the approval of the Employer. The washers shall be of adequate thickness to abridge the projection of the shaft and the commencement of the threaded portion. Taper washers shall be fitted where necessary.

Nuts shall be finger-tight on the bolt and will be rejected if they are, in the opinion of the Employer, considered to have an excessively loose or tight fit. Bolts re-threaded after galvanising will be rejected. The Contractor shall allow for the supply of surplus bolts, nuts and washers in excess of the exact amount measured to allow for shortages due to loss, misappropriation etc. Bolts of a single diameter only shall be used for a given tower type and as far as possible for all tower types. Only in exceptional cases, different diameter bolts shall be used with the prior approval of the Employer. But even in the latter case, for each tower type, all the bolts used shall be of the same diameter.

Usage of High Tensile bolts will be restricted to only those joints specifically indicated in the Employer's approved designs.

7.0 Castings

All castings shall be free from blowholes, flaws and cracks as far as is practicable. No welding, filling or plugging of defective parts shall be done under any circumstances. All cast iron shall be of close-grained quality approved by the Employer.

8.0 Welding

All joints shall be bolted joints, and welded joints shall not be permitted either during the design stage or the construction stage. However, in case of additional unforeseen requirements during erection by the Employer, if welding needs to be resorted to, the same shall be done with prior approval of the Employer and shall conform to BIS specifications. In such a case, the Contractor shall specifically indicate the location and purpose along with the proposed methodology for welding for the Employer's approval.

9.0 Spare Parts, Tools and Appliances

The bidder shall state in the relevant schedules the spares, special tools and/ or appliances which are recommended.The Employer may order all, none or any of the recommended items. Those ordered shall be delivered not later than the date of receipt of the last shipment of the associated item of plant. The price of the items shall be subject to the same price conditions as the associated item of plant. All spares shall be interchangeable with the original parts. They shall be treated and packed for long-term storage under the climatic conditions of the site.

Each item shall be clearly and permanently labelled on the outside of its container with its description and purpose. When several items are packed in one case, a general description of the contents shall be given on the outside of the case. Spare parts shall not be shipped in the same cases as components which are used for erection. The cases shall be clearly labelled to indicate that they contain spare parts or tools, and each tool or appliance shall be clearly marked with its size and purpose. All cases, containers, or other packages are liable to be opened for inspection and checking on-site.

10.0 Electrical Power Supplies

The Contractor shall arrange for the Power Supplies for construction purposes.

11.0 Materials and Finishes

Unless otherwise provided for in the Contract, all materials, fixtures, fittings, and supplies furnished (hereafter called "materials") shall be new and of standard first-grade quality. All assembly and construction work shall be done in a neat and professional manner. Materials shall be free of defects.

All of the plants, whether temporary or permanent, shall be in accordance with the Contract as to character, type, construction, constituent substances, weight, strength, shape, dimensions, etc.

In choosing materials and their finishes, due regard shall be given to the harsh climatic conditions which can occur in the area. Some relaxation of the following provisions may be permitted where equipment is hermetically sealed, but weatherproof materials should be used wherever possible.

All structural members, nuts and bolts shall be galvanised and shall conform to the requirements indicated elsewhere in the specifications.

12.0 Packing and Shipping

Any items liable to be damaged in transit shall be effectively protected and securely fixed in their cases. All cases of over 2 tonnes shall be marked to show where slings should be placed.

All cases shall be clearly identified, giving particulars of the manufacturer's name and type of equipment. All identification marks on the outside of cases shall be waterproof and permanent. All electrical equipment shall be adequately sealed and desiccating agents used where necessary to prevent damage from condensation. All equipment shall be packed and protected, bearing in mind that it will be shipped to a harsh environment, that a considerable period may elapse between its arrival on site and its unpacking and that covered storage may not always be obtainable.
All wood and other materials used in packing cases shall be insect free. Adequate protection and precautions are to be taken to exclude termites and other vermin, noxious insects, larvae or fungus from the packing materials or plant. All contents must be clearly marked for easy identification against the packing list.

The Contractor shall protect all steelwork before shipment to prevent corrosion and/ or damage. Bundles of steel sections shall be properly tied together by an approved method, and

care shall be taken to ensure that they are robust and that they can be handled easily during shipment.

Bolts and nuts shall be double-bagged and crated for shipment. Creating dissimilar metals is unacceptable.

Packing cases where used shall be strongly constructed, and in no case shall timber less than 25 mm in thickness be used. The contents of packing cases shall be securely bolted or fastened in position with struts or cross battens. Cross battens supporting weight in any direction shall not rely for their support on nails or screws driven lengthwise into the grain of the wood but shall be supported by cleats secured from the inside.

Transmission line conductors and OPGW shall be delivered wound on strong wooden drums treated to an approved international standard by vacuum impregnation with copper-chrome-arsenate (CCA) preservative to resist rotting and termite and fungus attacks. Drums with an outside diameter exceeding 2.5 metres and an outside width exceeding 1.4 metres shall not be used except with the Employer's approval. The central hole of the drums shall be reinforced with a steel plate of thickness not less than 10 mm to fit an axle size 95 mm diameter. The interior of the conductor drums shall be lined with bituminous paper to prevent the conductor from being in contact with the timber. Waterproof paper and felt lining shall overlap at the seams by at least 20 mm, and the seams shall be sealed.

Drums shall be adequately protected by securely fastening substantial wooden battens around the periphery. These battens shall be secured by means of steel tape bindings.

The thread of bolts used to strengthen the cable drums shall be pinned in such a way that the nut can be tightened but cannot be readily removed.

The contractor shall be responsible for any loss or damage during transportation, handling and storage due to improper packing.

13.0 Equipment Labels

All equipment shall be provided with labels or nameplates giving a description of the equipment, together with information regarding the rating, nominal voltage, nominal current and the like under which the item of plant in question has been designed to operate. The labels shall be permanently attached in a conspicuous position. Where this is not practicable, such labelling shall be provided on packaging to the Employer's approval.

Such nameplates or labels are to be of noncorrodible non-hygroscopic material with lettering of a contrasting colour or, alternatively, in the case of indoor equipment, of transparent plastic material with suitably coloured lettering engraved on the back.

All tower members shall be stamped with distinguishing numbers and/or letters corresponding to those on the approved drawings or material lists. These erection marks shall be permanently embossed before galvanizing and will be clearly readable afterwards. In addition, these erection marks shall be duplicated in block-painted lettering of a minimum of 30mm height on the outer galvanised surfaces of all tower members. Before leaving the factory, the ends of all tower members shall be painted to a nominated colour code to clearly

distinguish the tower types. All like members shall be appropriately bundled and tied for identification and handling during shipment, transport and stacking at the site.

14.0 Quality Assurance

The Contractor shall submit in the tender an outline of the Quality Assurance Program (QAP)/Practices that will be applied to all aspects of the manufacturing process.

Within one month of receipt of a letter of intent for equipment under this specification, the Contractor shall submit a detailed Quality Assurance Manual, which generally conforms with the requirements of ISO 9002. Approval to proceed with the manufacture of equipment within this Contract will not be given until this Quality Assurance Manual has been received and approved by the Employer. Delays to the Contract completion date due to non-compliance with this specification requirement will be the Contractor's responsibility.

Major features of the Quality Assurance Program practiced by the Contractor and detailed in his Quality Assurance Manual shall be:

a. The Contractor has defined all staff responsibilities and the QA systems operating within the organisation for the purpose of ensuring adequate quality of the end product.
b. The Contractor has a senior officer with the authority to resolve matters of quality to the satisfaction of the Employer.
c. The Contractor has adequate facilities under the control of properly trained staff to perform the quality control duties.
d. All production operations and test functions are properly documented and available to any relevant member of the Contractor's workforce.
e. A detailed inspection and test plan is prepared for the whole manufacturing operation.
f. Regular and systematic programmes of testing are carried out for all incoming raw materials.
g. Regular calibration checks are carried out on all measuring equipment used in the manufacturing operations.
h. Statistical analyses are carried out regularly on appropriate test results to confirm that all processes are performing within the specified tolerances.
i. Adequate procedures are planned for corrective action in the event that quality checks show that performance is not satisfactory.
j. All checking activities, test results etc., are recorded on appropriate standardized forms, and these are verified, certified, recorded and filed in a systematic manner.

15.0 Site Services

15.1 Living Accommodation

The Contractor is to make his own arrangements in regard to accommodation for his expatriate/ local staff during the supervision of erection.

All dwellings and buildings existing or erected for the purpose by the Contractor shall comply with local regulations in regard to construction, water supply and sanitation and other requirements. Temporary construction camps must be provided with proper sanitation and other necessary facilities. All temporary accommodation shall be removed by the Contractor

when no longer required and before the granting of the Final Certificate. After the removal of accommodation, the ground shall be left in a clean and tidy condition.

15.2 Office Accommodation

The Contractor is to provide such temporary buildings as may be necessary for office accommodation for his and employer's Site staff during the erection of the Works, and the cost of these shall be deemed to be included in the Contract Price.

15.3 Medical Facilities

The Employer will not provide these, and the Contractor shall make his own arrangements where these services may be required for his staff.

15.4 Labour Work Permits, Accommodation and Insurance

It will be the responsibility of the Contractor to ensure that all grades of expatriate labour have the current and correct work permits and/ or visas and to comply in every way with the immigration and/ or emigration regulations. He shall also ensure that he complies with the labour equipment laws of the country and the requirements for leave, accommodation and insurance of all his employees and the employees of his sub-contractors. The Contractor, in all dealings with labour in his employment, shall have due regard to all recognised festival days of rest and religious or other customs.

15.5 Transport to Site

The Contractor is to bear all expenses in connection with the transport to the Site of all plant, material and things needed for the purpose of the Contract, including warehouse rent, handling and other charges which may occur. The Contractor is to observe any regulations which limit loads on roads and bridges over which material may be conveyed.

15.6 Plant Handling and Storage

The handling and storage of any plant at the Site will be the responsibility of the Contractor. The Contractor shall arrange for suitable lay-down areas. The Contractor is to advise on the protection of all material against corrosion, theft, and mechanical damage during storage and erection at the Site.

Only galvanised structural steelwork may be stored in the open. Plants sensitive to climate must be stored in closed buildings protected from dust and humidity.

15.7 Access

Wherever approved, the Contractor will be responsible for the construction and maintenance of any temporary accesses. When haulage or construction accesses are no longer required, the Contractor shall break up hardened surfaces, remove all imported material, and shall reinstate the original surface and topsoil of the disturbed areas to a natural condition.

15.8 Site Sanitation

The Contractor shall ensure that every construction site is maintained in a clean and sanitary condition. The Contractor shall provide refuse collection and disposal services, including sweeping of paved streets and cleaning of drainage channels. Adequate mobile or other toilets shall be provided at the work sites controlled by the Contractor. The Contractor shall ensure that such toilets remain in a hygienic condition.

15.9 Lighting and Power

All power and lighting circuits shall be constructed with due regard for personnel safety and shall comply with recognised codes of practice and local regulations. All circuits shall be fitted with earth leakage systems. The cost of the electricity connection, including any equipment required for getting the necessary connection and monthly energy charges, shall have to be paid by the Contractor, and the cost of these shall be deemed to be included in the Contract Price.

15.10 Spoil Areas

Disposal areas for transmission tower foundation spoil, wherever necessary, shall be determined by mutual agreement with the Employer, land owners, and local authorities. It shall be the responsibility of the Contractor to ensure that spoil does not negatively impact the natural beauty, function or ecosystems of the area.

16.0 Contractor's Responsibility

16.1 Safety of Personnel

The Contractor shall afford maximum safety to personnel directly engaged in this Contract or to persons who, in the normal course of their occupation, find it necessary to utilise temporary works erected and to frequent the working area.

Once any section of the plant has been made life, the Contractor and the Employer shall establish and agree to a system for ensuring the safety of personnel and equipment. While the plant is under the control of the Contractor, the Contractor shall be primarily responsible for the safety precautions. While the plant is under the control of the Employer, the Employer shall be primarily responsible for these precautions.

16.2 Contractor's Employees

The Contractor shall provide adequate transportation, accommodation, boarding and medical facilities for all personnel in his employment. He is also to comply with the requirements of all relevant Labour Laws of Bhutan.

The Contractor shall be responsible for the behaviour on site of all personnel employed by him.

16.3 Progress Reports

At monthly intervals, the Contractor shall submit to the Employer detailed progress reports (in triplicate) in an approved form indicating the stage reached in the design, ordering of material, manufacture, delivery and supervision of erection of all components of the plant.

All variances from the agreed schedule are to be promptly reported. These reports shall be forwarded promptly so that, on receipt by the Employer, the information contained therein is not more than seven days out of date. Copies shall also be forwarded to the Employer's representative on Site. These reports shall be prepared using project management software like Microsoft Project. The soft copies of the report shall also be supplied to the Employer.

The Contractor shall submit to the Employer a weekly return detailing for each portion of the works separately, the numbers of the various classes of workmen employed by him on the Site, the Contractor's equipment on site, or any other information that may reasonably be required.

Access to the Contractor's and Sub-Contractor's works shall be granted to the Employer at all reasonable times for the purpose of ascertaining progress.

16.4 Progress Meetings

The Contractor shall attend regular formal site Progress Review Meetings (PRM) with the Employer, where progress and construction-related issues will be reviewed. If requested by the Employer, the Contractor shall prepare for issue the day before the meeting detailed schedules showing the erection separately, fixing, concreting, commissioning, or other work activities planned for the next two weeks as well as progress achieved over the preceding week.

The Contractor shall also be required to attend other meetings from time to time on special subjects.

16.5 Relations with Local Residents and District Heads

The Contractor shall liaise with the local village/ Head of various organizations/agencies on matters concerning the impact of his operations on the local communities. Any problems the Contractor cannot resolve shall be referred to the Employer.

16.6 Public Relations

The Contractor shall not publish or provide any information relating to the progress or financial status of the works to any person or organisation without the prior consent of the Employer.

17.0 Environmental, Safety and Health Requirements

17.1 Overview

As per the requirement of the Environmental Clearance Guidelines for the Power Transmission and Distribution Lines, at the time of Contract execution, the Contractor will be required to provide project specific Environmental Management Plan (EMP) that addresses the issue of project implementation responsibilities. The EMP shall also incorporate the negative impacts and mitigation measures, and monitoring strategy proposed by the Proponent in accordance with the Environmental Clearance Guidelines for the Power Transmission and Distribution Lines.

Bhutan Power Corporation Limited (BPC) has a strong commitment to providing a safe and healthy workplace and protecting the environment, natural resources, and local communities that could be affected by project implementation and development. This philosophy is inherent in BPC's approach to planning, designing, and constructing projects in the country. To facilitate this, BPC has a strong commitment to comply with minimum Environmental, Safety, and Health (ES&H) requirements that apply to all projects regardless of geographic location. The key principles of Employer's Environmental and Social Policy are:

a) Avoidance of environmentally and socially sensitive areas while planning project activities.
b) Minimization of impacts when project activities occur in environmentally and socially sensitive areas.
c) Mitigation of any unavoidable adverse impacts arising out of its projects.

Basic issues to be kept in mind while carrying out construction activities are to:

a. Avoid socially sensitive areas with regard to human habitations and areas of cultural significance.
b. Secure the interest of people affected by Employer's projects.
c. Involve local people affected by transmission line projects as per the requirement and suitability.
d. Consult affected people in decisions having implications to them if considered necessary.
e. Apply, efficient and safe technology/practices.
f. Keep abreast of all potential dangers to people's health, occupational safety and safety of the environment and the respective mitigatory measures.
g. Establish preventive mechanisms to guarantee safety.
h. Avoid unwarranted cutting of trees in forest areas.

17.2 Contractor's Responsibility

The Contractor shall fully comply with applicable environmental laws, regulatory requirements, and BPC's requirements, including the key requirements listed below:

The Contractor shall designate a focal person at every project site to ensure compliance with environmental laws and regulations and any other requirements governing the project.

The Contractor should, as far as possible, ensure to avoid the occurrence of accidents at the work site. The Contractor shall ensure to provide reports on incidents and cases of accidents that occurred at the work site and the corresponding corrective and preventive measures taken to deal with such issues.

Managers and supervisors will participate in environmental self-assessments, monitoring and audits, and incident investigations; additionally, supervisors are responsible for conducting monthly meetings to emphasize important ES&H issues associated with their work activities, including any deficiencies and corrective actions.

All construction workers will be supplied with appropriate personal protective equipment (e.g., safety helmet, safety glasses, protective gloves and boots etc. covered under Occupational Health and Safety) and tools where applicable to allow them to perform their work safely, maintain equipment in good working condition, and operate equipment in accordance with the manufacturers' recommendations.

Good “housekeeping” will be maintained to promote fire prevention and sanitary conditions.

BPC may set further safety requirements that may apply depending on the Contractor’s scope of work, site-specific conditions, or when specialized equipment is used in accordance with the applicable norms of the country.

The Contractor shall demonstrate in his EMP proposal that he has incorporated all applicable safety and health requirements to the risks and hazards associated with their scope of work.

Contractors will be responsible for conducting regular inspections and periodic evaluations of their work activities to ensure compliance with the project’s ES&H requirements, environmental clearance requirements etc. The contractor’s inspection and audit results will be made available to BPC for review.

17.3 Environmental Monitoring and Management Plan.

Contractors are responsible for complying with all governing environmental laws, regulations, and clearances and are expected to employ effective field control and mitigation measures where applicable in their scope of works to deal with environmental issues such as Spill prevention and response, Erosion and sediment control, Dust control, Waste/debris management, Cleanup and restoration of disturbed areas, Camp Site Rehabilitation Plan, watershed Protection Approach, River and Stream Protection Approach, Illegal Activity viz., Hunting and Fishing of Wildlife, Stealing of forest resources, and Vandalism; Camp Location; Camp Facility and Sanitation; Drinking Water Facilities; Sewage Disposal Facilities; Stocking of materials and equipment etc.

Contractors will be required to comply with all access restrictions, including prohibitions on access to sensitive natural resources (e.g., wetlands, protected areas, eco-tourism sites, heritage sites, and special wildlife habitats) or areas adjacent to the worksite.

Depending on the Contract amount and/or the scope of work and its corresponding impact and effects the project may have on the total environment, the Contractors are required to develop a Contractors Site Environmental Management Plan that conforms to all environmental laws and other requirements governing the project.

17.4 Occupational Health and Safety (OHS)

Contractors are responsible for complying with all applicable safety and health (OHS) regulations, manuals, and the Contractor’s own OHS requirements as they apply to their scope of work. Contractors may be required to provide a written OHS Plan that specifically addresses the hazards and corresponding mitigation measures associated with their scope of work.

Prior to starting work, Contractors will demonstrate to BPC that all applicable safety procedures have been adopted.

The contractor or Site In-charge is expected to perform weekly pre-task planning to identify potential hazards and the corresponding mitigation measure(s) to eliminate or minimize the risk associated with the performance of the work.

Contractors will be responsible for promptly reporting all injuries and near misses to BPC's onsite management and conducting an incident investigation in a timely manner. The incident investigation should focus on identifying and documenting the root cause(s), finding(s), and corrective action(s) to prevent a reoccurrence of the incident.

Contractors are required to provide an employee who is currently certified in first aid to render adequate treatment for their employees working onsite or make available first aid medical facilities available on site. The payment against OHS in the price schedule shall be made upon production of invoices and physical verification of personnel safety equipment but limiting to safety gears such as : safety helmet, safety glasses, protective gloves and boots etc) by the Engineer.

The Contractor shall hold the proponent/employer harmless from any liability for not complying with environmental laws and regulations and any other requirements governing the project.

BPC's receipt, review, and approval of the aforementioned plan are a condition precedent for mobilization of payment.

The Contractor shall inform/request the Employer regarding renewal of Environmental Clearance at least three months before the expiry of the same. Such request should include separate reports/documents such as achievement on the protection of flora and fauna, health and safety of personnel and mitigation measures and any other relevant documents as may be requested by the Employer for onward submission to the National Environment Commission (NEC) for renewal of the Environment Clearance for the Project.

The Contractor shall ensure that construction does not negatively impact the natural beauty, function, amenities, or ecosystems of the area, and care shall be taken to prevent permanent damage.

All rivers and streams shall be protected from direct or indirect spills of pollutants resulting from the Contractor's activities.

The Contractor shall provide drainage facilities at each tower site and shall revegetate the surface where necessary to prevent erosion and consequent weakening of the tower foundations.

The Contractor shall, as far as possible, protect the flora within the work sites. If areas are disturbed beyond the designated work boundaries, the Contractor shall reinstate the ground and re-establish suitable vegetation as directed by the Employer at no extra cost to the Employer. Such re-establishment shall take place as soon as practicable after the Employer's request.

The Contractor and his employees shall protect all fauna living within the site area and shall ensure that hunting, shooting, birds nesting, egg-collecting, or trapping does not occur. Permits to cut any trees shall be obtained from the relevant authorities through the Employer.

Any penalty imposed due to non-compliance to the rules and regulations shall be borne by the contractor.

18.0 Documentation

18.1 Engineering Data

The furnishing of engineering data by the Contractor shall be in accordance with the Schedule as specified in the Bidding Document. The review of these data by the Employer will cover only general conformance of the data to the specifications and not a thorough review of all dimensions, quantities and details of the materials or items indicated or the accuracy of the information submitted. The Contractor shall not consider this review by the Employer as limiting any of his responsibilities and liabilities for mistakes and deviations from the requirements specified under these specifications.

All engineering data submitted by the Contractor after review by the Employer shall form part of the contract document.

18.2 Drawings

In addition to those stipulated in the clause regarding drawings in GCC/SCC, the following also shall apply in respect of Contractor Drawings.

All drawings submitted by the Contractor, including those submitted at the time of Bid, shall be with sufficient detail to indicate the type, size, arrangement, dimensions, material description, Bill of Materials, the weight of each component break-up for packing and shipment, fixing arrangement required, the dimensions required for installation and any other information specifically requested in these specifications.

Each drawing submitted by the Contractor shall be clearly marked with the name of the Employer, the specification title, the specification number and the name of the Project. All titles, notes, markings and writings on the drawing shall be in English. All the dimensions should be to the scale and in S.I. units.

The drawings submitted by the Contractor shall be reviewed by the Employer as far as practicable within 15 working days and shall be modified by the Contractor if any modifications and/or corrections are required by the Employer. The Contractor shall incorporate such modifications and/or corrections and submit the final drawings for approval. Any delays arising from the failure of the Contractor to rectify the drawings in good time shall not alter the contract completion date.

The drawings submitted for approval to the Employer shall be in quadruplicate. One print of such drawings shall be returned to the Contractor by the Employer marked "approved/approved with corrections". The contractor shall thereupon furnish the Employer additional prints as may be required, along with one reproducible in the original of the drawings after incorporating all corrections.

The work shall be performed by the Contractor strictly in accordance with these drawings, and no deviation shall be permitted without the written approval of the Employer, if so required.

All manufacturing, fabrication and erection work under the scope of the Contractor, prior to the approval of drawings, shall be at the Contractor's risk. The contractor may incorporate

any changes in the design, which are necessary to conform to the provisions and intent of the contract, and such changes will again be subject to approval by the Employer.

The approval of the documents and drawings by the Employer shall mean that the Employer is satisfied that:

a. The Contractor has completed the part of the Works covered by the subject document (i.e., confirmation of progress of work).

b. The Works appear to comply with the requirements of the Specifications.

In no case, the approval by the Employer of any document does imply compliance with all technical requirements nor the absence of errors in such documents.

If errors are discovered at any time during the validity of the contract, then the Contractor shall be responsible for the consequences.

All drawings shall be prepared using AutoCAD software version 2000 or later only. Drawings, which are incompatible with AutoCAD software version 2000 or later, shall not be accepted. After final approval, all the drawings (structural drawings, BOMs, shop sketches and tower accessories drawings) shall be submitted to the Employer in CADs.

A copy of each drawing reviewed will be returned to the Contractor as stipulated herein. Copies of drawings returned to the Contractor will be in the form of a print with the Employer's marking or a print made from a microfilm of the marked-up drawing.

The following is the general list of the documents and drawings that are to be approved by the Employer.

i. Work Schedule (Master Network) Plan.
ii. Detailed survey report and profile drawings showing ground clearance and tower locations (as applicable).
iii. Final Tower Schedule and foundation classification for individual tower locations.
iv. Tower structural drawing and bill of materials (black steel weight only).
v. Soil Investigation report.
vi. Foundation working drawings/excavation Plan.
vii. Tower footing earthing drawing.
viii. Stub and stub-setting template drawings.
ix. Stringing procedure and stringing chart
x. Tower accessories drawings like danger plate, nameplate etc.
xi. Quality plans for fabrication and site activities, including Quality System.
xii. Sub-vendors approval, etc.
xiii. Line material drawings.
xiv. Type test report for line materials.

All rights of the design/drawing for all types of towers and foundations shall be strictly reserved with the Employer only for this specific Project, and any designs/drawings/data sheets submitted by the contractor from time to time shall become the property of the Employer. Under no circumstances shall the Contractor be allowed to use/offer the above designs/drawings/data sheets to any other authority without prior written permission of the

Employer. Any deviation from the above is not acceptable and may be a cause for rejection of the bid.

18.16 Design Improvements

The Employer or the Contractor may propose changes in the specification, and if both parties agree upon any such changes and the cost implication, the specification shall be modified accordingly.

18.17 Design Co-ordination

Wherever the design is in the scope of the Contractor, the Contractor shall be responsible for the selection and design of appropriate material/item to provide the best-coordinated performance of the entire system. The basic design requirements are detailed in this Specification. The design of various components, sub-assemblies and assemblies shall be so done that it facilitates easy field assembly and maintenance.

18.18 Design Review Meeting

The contractor will be called upon to attend design review meetings with the Employer during the period of the Contract. The contractor shall attend such meetings at his own cost at the Corporate Office of the Employer or other venue as and when required. Such review meetings will generally be held four times a year. Such design review meetings are in addition to the monthly and quarterly Site Progress Review Meetings.

18.19 Quality Assurance, Inspection & Testing

To ensure that the supply and services under the scope of this Contract, whether manufactured or performed within the Contractor's works or at his Sub-Contractor's premises or at the site or at any other place of work, are in accordance with the specifications. The Contractor shall adopt a suitable quality assurance programme to control such activities at all points necessary. The Contractor shall broadly outline such a programme and shall be finalized after discussions before the award of the Contract. The contractor shall submit the detailed programme after the award of the contract and finally be accepted by the Employer after discussion. A quality assurance programme of the Contractor shall generally cover but not be limited to the following:

1. His organisational structure for the management and implementation of the proposed quality assurance programme.
2. Documentation Control System.
3. Qualification data for Contractor's key personnel.
4. The procedure for purchase of materials, parts components and selection of sub-contractor's services, including vendor analysis, source inspection, incoming raw material inspection, verification of material purchases etc.
5. System for shop manufacturing, including process controls and fabrication and assembly controls.
6. Control of non-conforming items and system for corrective action.
7. Control of calibration and testing of measuring and testing equipment.
8. Inspection and test procedure for manufacture.

a. System for indication and appraisal of inspection status.
b. System for quality audits.
c. System for authorizing the release of manufactured products to the Employer.
d. System for maintenance of records.
e. System for handling storage and delivery and
f. A quality plan detailing the specific quality control procedure adopted for controlling the quality characteristics relevant to critical and important items of supply.

The Quality plan shall be mutually discussed and approved by the Employer after incorporating necessary corrections by the Contractor as may be required.

18.20 Dispatch Documents

The Contractor shall supply consignment notes bearing the reference number of each dispatch, a list of the contents of each crate, identification numbers, dimensions, net and gross weights and, where necessary, any special instructions regarding storage and the type of packaging/ handling.

PART II - SPECIFIC TECHNICAL REQUIREMENTS

CONTENTS

CHAPTER 1	TRANSMISSION LINE GENERAL
CHAPTER 2	SURVEY & ALIGNMENT
CHAPTER 3	SOIL INVESTIGATIONS
CHAPTER 4	TRANSMISSION LINE TOWERS
CHAPTER 5	TESTS & INSPECTION OF MATERIALS
CHAPTER 6	FOUNDATIONS OF TOWERS
SECTION 7a&7	CONDUCTORS
CHAPTER 8	OPTICAL GROUND WIRE (OPGW)
CHAPTER 9a&9	INSULATORS & HARDWARE ACCESSORIES
CHAPTER 10	ERECTION, TESTING & COMMISSIONING WORKS
CHAPTER 11	PRINCIPAL TECHNICAL PARAMETERS
CHAPTER 12	CABLE SPECIFICATIONS

ENCLOSURES

ANNEX A	LIST OF APPROVED MAKES
ANNEX B	STANDARDS & CODES
ANNEX C	SCHEDULE OF GUARANTEED TECHNICAL PARTICULARS
ANNEX D	TENTATIVE TOWER NUMBER AND TYPES

CHAPTER 2

SURVEY & ALIGNMENT

1.0 General

The Employer has already carried out a walk on survey. A map showing the line route is enclosed with the Bidding Document. This is to be used for the purpose of general reference and guidance only. The Contractor shall carry out the final route alignment as per the requirement, detail survey, tower spotting, profiling using PLS-CADD software, check survey, etc., and the documents/schedules submitted for approval shall be along with the soft copies of the PLS- CADD/PLS-Tower back up file.

2.0 Survey Equipment

The Contractor shall ensure that all the equipment/instruments and measurement devices are properly calibrated at the start of the work to reflect factual values. The Contractor shall present to the Employer calibration certificates for the equipment, traceable to National Standards. If required by the Employer, the Contractor shall have the instruments and devices tested at an approved laboratory at his own cost. The Contractor shall submit the corresponding calibration reports to the Employer before these instruments are used for the work. If the Employer desires to witness the calibration tests, the Contractor shall arrange for the same.

The Employer reserves the right to reject any instrument and debar its use for this work if the Employer finds the equipment defective or found wanting in any manner. The Contractor shall then immediately replace such instruments at his own cost without hampering the progress of work. No extension of time will be granted on this account.

3.0 Survey Personnel

The Survey shall be carried out under the direction and control of a qualified Surveyor.

The fieldwork shall be carried out and supervised full-time by qualified surveyors only. The Drawings shall be executed by experienced draughts person and personnel on a computer using AutoCAD. A qualified and experienced surveyor shall prepare the Report.

4.0 Transmission Line Survey

4.1 Access to Site

The Employer will provide such right of access along the line routes as the Employer agrees it necessary to enable the Contractor to proceed with setting out, preliminary and profile survey, and soil-investigation.

4.2 Route Clearing

The Contractor shall clear the line routes of trees to such an extent as will permit the erection of the lines and their subsequent safe operation. The required corridor, as mentioned elsewhere in this Specification on each side of the centerline of the transmission route, shall be made to facilitate construction. The width of the corridor shall be measured parallel to the ground, particularly on sloping terrain.

In addition to the above, after the completion of the line, those trees also shall be cut, which, if they fall, will endanger the line by falling on it. Such trees shall be cut to the extent that if they fall, they will leave the live line clear by at least 5m. It is expected that once a clear required corridor on either side of the line is made, cutting after completion of the line will be very small.

The timber thus cut shall be the property of the RGOB. The Contractor shall, at his own expense, be responsible for any arrangements necessary to avoid damage to orchards, gardens etc. Clearing will be carried out after the Employer has obtained wayleaves.

It shall be noted and remembered that unauthorized tree cutting is an offence in Bhutan; any tree cutting shall be started only after the requisite permission has been obtained by the Employer from the concerned authorities for each and every tree to be cut.

4.3 Preliminary Survey

The Contractor shall carry out a preliminary survey in the region where re-alignment is necessary, as specified herein below. Preliminary survey will not be necessary (except for a small line portion) along the original alignment, for which a report will be provided to the successful bidder.

The Contractor shall make immediate arrangements to set out the angle and terminal support positions. He shall then establish preliminary lines by instrument survey between angle and terminal points with an adequate number of intermediate line pegs and including the minimum clearing of vegetation necessary to obtain lines of sight if such circumstances arise.

The Contractor shall record the positions of angle and terminal pegs on sketches related to existing permanent features nearby or to additional pegs placed offline in such a way that the angle and terminal pegs can be conveniently and accurately replaced in the event of a loss. For the preliminary survey, wooden or any other convenient pegs may be used, but the same shall be replaced at the Contractor's cost, in case they are lost, till the Profile Survey is completed with peg-marking in that stretch of the line. The preliminary route shall then be offered for inspection by the Employer.

In certain stretches of the line, the Employer may find it necessary to again carry out the Preliminary Survey along an adjacent route discarding the one where the survey has been done. It shall be deemed that such changes have been considered in the per km rate of the survey, and the payment for the survey shall be made only for the length of the finally adopted route. No payment shall be made for the discarded stretches. The Employer shall make all efforts to limit such changes to the minimum.

The Employer’s Representative will accompany the Contractor’s staff during the preliminary survey. The preliminary survey shall be deemed complete when the Employer has approved the preliminary line.

4.4 Profile Survey & Setting Out

After obtaining the Employer's approval for the preliminary routes, the Contractor will proceed to peg out the centerline and carry out a profile survey in convenient sections and shall not await the completion of the entire preliminary survey. The profile survey shall be carried out for the entire line route, inclusive of original alignment and sections of re-alignment as approved by the Employer.

It is the responsibility of the Contractor to center-peg the line in such a manner that pegs are not easily removable. As a safeguard, it may be necessary to locate and tie in permanent features near the line, which will enable the speedy reinstatement of both angle and intermediate points in the event of unauthorized removal of any pegs. The pegging shall be done by 1:2:4 concrete block, 150 x 150 mm square in size, 400 mm buried in the ground and projecting 300 mm above ground. After concreting the concrete block to the required height, the top surface should be finished smoothly, with a slight slope from the center towards the 4 outer edges to drain off the rainwater falling on the coping.

The rate for the Survey shall be deemed to include center-pegging and reinstatement of any lost, removed or otherwise destroyed pegs.

The Contractor shall prepare strip plans and longitudinal sections for each complete line at scales of 1:2000 horizontal and 1:200 vertical.

The Contractor shall plot thereon the proposed support positions and submit the profiles for approval. The use of standard tower spotting software is recommended. Tower shall be so located that the wind and weight span loading specified in these Specifications are not contravened.

The profile drawings are to include the following: -

Strip map, continuous longitudinal section chainage between angle points, positions of pegs on line, ground line salient levels related to local datum levels, a ground line, ground clearance line, line of lowest conductor at maximum sag, an indication of side slopes where these affect ground clearances below the outer conductor phases (due account being taken of conductor swing with respect to vertical or other steep slopes and obstructions), walls, fences, hedges, buildings, streams and rivers, roads, power and telecommunication lines to be crossed or to deviate, pipelines, sections unsuitable for support positions, vegetation, and any other features affecting the line construction.

High-voltage power line crossings shall be surveyed and drawn up in sufficient detail to show that all required clearances are obtained. If necessary, separate plan and elevation scale sketches shall be prepared for the same.

Once the profile is approved, the Contractor shall lose no time in center pegging the supports for inspection by the Employer.

The rate for survey shall be deemed to include any and all costs that the Contractor shall have to bear to satisfy all that has been specified herein, including submission of survey drawings, removal of obstructions, crossing power lines, replacement of lost pegs etc., all included in an average rate per km of alignment.

A plan and a cross-section shall be prepared based on the survey at each tower location. The plan of the tower location shall include contours with intervals of 0.5 m at least 6 m beyond the tower leg away from the tower center. The cross-sections shall show ground levels on eight lines radiating from the tower center and extending 6 m beyond the tower legs, four lines in transverse and longitudinal directions of the tower and the other four lines in the directions of four tower legs. The Contractor shall prepare the plan and cross-section at a scale of 1:100 horizontal and vertical.

The Contractor shall indicate in the drawings his proposed setting levels, body extensions etc., for approval by the Employer. After the completion of the line and before final payment, a drawing showing the completed line marked on the 1:20000 map shall be submitted to the Employer.

Profile survey shall be deemed complete, and the Contractor shall be entitled to claim payment for the survey when all activities specified herein have been completed to the approval of the Employer. A small amount of 5% to 10%, at the discretion of the Employer, shall be withheld after the completion of the line to ensure that all trees likely to endanger the line on falling are cut as specified above, and drawing of the completed line marked on 1:20000 map is submitted.

4.5 Damage to Crops & Property

The Contractor shall take all precautions to avoid damage to land property, crops, etc. and shall ensure that the work is adequately supervised so that damage is reduced to the minimum. All surplus material shall be removed after erection, and the site shall be left in a clean and tidy condition to the satisfaction of the Employer.

Compensation for crops and property which may need to be paid to the affected landowners as a result of acquiring the ROW shall be paid by the Employer. However, damage caused by the Contractor as a result of careless and unprofessional work ethics shall be paid by the Contractor.

4.6 Removal of Obstructions

Where it is agreed that obstructions such as telecommunication lines, power lines or pipes are to be permanently removed or relocated to allow the erection of the lines, the Employer will initiate relocation procedures, obtain necessary consent and secure removal upon receipt of sufficient notice through the Employer from the Contractor of his planned date for commencing work at the places affected. The Contractor shall be responsible for ascertaining the periods of notice required and shall make appropriate allowance in his program.

Immediately after completion of the profile survey, the Contractor shall provide sketches showing the relative positions of the lines and the obstructions.

4.7 Crossing of Public Services

Where public services are to be crossed and are not to be permanently removed, the Employer will obtain necessary approval for crossing on the basis of sketches to be provided by the Contractor immediately after completion of the profile survey and showing the relative position of the lines and the services. Where the Contractor is about to erect a conductor along or across power lines, telecommunication lines, public roads or waterways, he shall be responsible for ascertaining and giving requisite notice to the appropriate authority of the date and time at which the Work will be carried out.

Existing LV lines (400/230V) will generally be switched off during working (daylight) hours while the conductor erection progresses at crossing points. The Contractor shall provide a scaffold to protect the existing lines from physical damage and to maintain adequate clearance against accidental contact with lines when energized outside working hours.

For existing lines at voltages exceeding 400/230V, extended outages will not be possible, and the Contractor shall provide live line scaffolds such that conductor erection can proceed safely over-energized lines. The Employer will arrange outages, for the erection and removal of live scaffolds, upon receipt from the Contractor of requisite notice (which the Contractor shall ascertain and allow for in his program), but the duration of such outages will be the minimum necessary for the work to be completed. Where essential supplies are affected, it may be possible to provide outages only at weekends or public holidays. The Employer shall inform the Contractor which existing lines are subject to such restriction, and the Contractor shall arrange his program accordingly.

Where it is necessary to provide scaffolding for other HV/EHV line crossings over roads or telecommunication lines in order not to interfere with the passage of traffic, this shall be carried out by the Contractor at such times as may be convenient to the authority concerned. Flagmen and approved types of danger or warning notices shall be provided by the Contractor to ensure the safety of the public. Scaffolding and decking shall be erected in a safe manner to the approval of the Employer, and the time taken to affect the crossing and remove the temporary work shall be kept to a minimum. The Contractor shall provide his Bid and drawings showing his proposed scaffolding.

The cost of all scaffolding, warning signs, notices and other necessary precautions shall be deemed to be included in the Schedule of Quantities/Rates for stringing. Separate payment shall not be made for the cost of live line scaffold for HV lines. Such costs are deemed to be included under the items of stringing and erection.

4.8 Other Crossing

The Contractor shall, at his own expense, make the necessary arrangements and take any necessary precaution where the route crosses other obstacles or ground over which erection cannot be carried out in the normal manner.

4.9 Livestock

The Contractor shall make adequate provisions to prevent the straying of or damage to livestock during the execution of the Contract Works. Until permanent reinstatement of fences, walls, hedges, and gates is completed, the Contractor shall be held responsible for any loss or damage to livestock due to failure to comply with the above requirement.

4.10 Drawings / Maps and Field Records

The Contractor shall initially produce check prints of all Drawings for review and comments of the Employer prior to proceeding with the final copies at no extra cost to the Employer. All comments of the Employer shall be incorporated into the final Drawings. The Detailed Survey Drawing shall identify and depict all prominent features and details with their sizes, elevations/ depths, bearings and coordinates. The Contractor shall mention and acknowledge all the drawings, all the reference survey and other data used for the Survey and for the compilation of the drawings. All drawings shall have their respective scales drawn upon them. Nameplates of drawings and Drawing Numbers shall be as directed by the Employer only. All drawings submitted by the Contractor shall be in one of the standard sizes decided with the approval of the Employer.

The Contractor shall prepare all drawings and maps in ink on good quality tracing paper weighing not less than 90/95 gm / sq.m. The Contractor shall submit the tracings and one reproducible and four prints of each map. The Contractor shall also submit all the drawing information on CDs, compiled in AutoCAD. All these drawings, prepared in AutoCAD, shall have various layers, and the Contractor shall furnish this information with the drawings.

The Contractor shall submit all the Field Records, Field Books, Calculations, Check Prints as marked up by the Employer, etc.

4.11 Errors & Accuracy

The Contractor shall be responsible for the correctness and accuracy of the work done. If any errors are detected, even if such work is approved, the particular work shall be redone by the Contractor at his cost. The Employer may check the survey work as required during the course of the survey. However, such checks shall not absolve the Contractor of his responsibility for the correctness and accuracy of the work.

All levels shall be read accurately to the nearest 5mm. The error for linear measurement shall not exceed 1:10,000. The error in angular measurements shall not exceed six (6) seconds per station. In any triangulation or traverse, the cumulative angular error shall not be more than 30/N seconds, where N is the number of traverse stations. The probable error of computed sides shall not exceed 1 in 5000.

The closing error for levelling shall not exceed ± (5 K) mm, where K is the distance of the traverse in kilometers.

4.12 Maintenance of Records

All book entries shall be made in ink in the proper field and level books in accordance with standard practice. Any wrong entries shall be neatly struck out and rewritten. All such books shall be made available for inspection by the Employer during any stage of the Survey. If, in the opinion of the Employer, the book entries are unsatisfactory, he may order the survey work to be redone. The Contractor shall submit calculations to establish the accuracy of the work done, the area of the plot and such other calculations that may be necessary.

4.13 Measurements

Measurement of all transmission line work shall be on a linear horizontal length basis. The work covered shall be measured from the prepared drawing by AutoCAD. Transmission line length shall be measured parallel to the conductor (i.e. tower peaks) to be erected later on.

Quantities of work indicated in the Schedule of Quantities are only approximate. The Employer reserves the right to modify the extent of the Scope of the Survey in each area to be surveyed at any time during the course of the work. All work actually done will be measured and paid at the rates quoted.

Rates quoted shall include the supply of all documents, drawings, maps, and computer diskettes etc., all as per the Bid Documents. The rates shall also be inclusive of the cost of all cutting of vegetation, transportation, boarding and lodging of all personnel, stationeries, wages of temporary and permanent personnel, all materials, equipment, taxes, insurance and everything necessary for the due performance of work under this Contract complete as specified.

4.14 Submission of Reports

On completion of work, a full report of the work done shall be submitted. This shall be on the lines of Standard Civil Engineering practice and shall include a general write-up of the work executed along with angle point details, tower details, accessibility etc.

CHAPTER 3

SOIL INVESTIGATION

1.0 Geotechnical Investigation

1.1 General

Detailed report of the Geotechnical study, where carried out by the Employer, shall be furnished to the Contractor at the time of contract award. For this project, however, no such studies have been carried out and a detail Soil Investigation is in the scope of the Contractor, which shall be carried out in strict compliance with the best practices and the following specifications. The Contractor should carry out a detailed geotechnical investigation along the route and submit a comprehensive Geotechnical report for designing the appropriate foundation type. All work shall be carried out strictly in accordance with these Technical Specifications unless otherwise approved by the Employer in writing. Where not specified, the latest edition of the applicable code of practice or procedure as laid down by the Bureau of Indian Standards (BIS) shall be followed. The Earth Manual of the United States Bureau of Reclamation shall also be referred to in the absence of relevant information, procedures and guidelines by BIS. Only the SI system shall be observed. The metric system may be used only if approved by the Employer. In case of any discrepancy between these Specifications and BIS, these Specifications shall govern.

1.2 Purpose

The purpose, in brief, of the proposed Geotechnical investigation is to ascertain the type of substrata such as soil, rock, etc., their characteristics and their suitability for the structures proposed to be built and to decide on the choice of the types of foundation to be adopted for the type and magnitude of envisaged loading.

1.3 Scope of Work

The scope of sub-soil investigation covers mobilization of necessary equipment and personnel, setting of equipment, boring, drilling, excavating trial pits, collection of undisturbed soil samples wherever possible, otherwise disturbed samples, conducting field and laboratory tests on soil and rock samples to find out the various parameters as detailed in this Specification and submission of Geotechnical report in five copies along with recommendations regarding the suitable type of foundations, soil improvement wherever necessary etc. The Contractor also provides technical services as and when called for by the Employer. The Contractor shall ensure that all the equipment/ instruments are properly calibrated at the start of the work to reflect factual values.

1.4 Field Investigations

Fieldwork shall be supervised on a full-time basis by a suitably qualified and experienced Civil/ Geotechnical Employer and/ or Geologist.

All the specified locations for boreholes and field tests shall be set out at the site by the Contractor from two established reference grid lines.

The ground level shall be related to an established benchmark or to a GTS benchmark or as directed by the Employer or indicated on the drawing.

1.5 Trial Pits

Trial pits of size 2m x 2m x 3.5m depth (except for sound rock at shallow depth) shall be excavated at every identified location. These trial pits shall be properly logged on all four sides up to the foundation depth. Undisturbed samples shall be collected at every one-meter depth. Pocket penetrometer tests shall be conducted at different depths, in different strata, and in cohesive soils only. In-situ densities shall be determined for the sample locations: The samples should be tested in the laboratory to find out the various parameters as detailed further ahead in this Specification. Groundwater samples shall be collected from each Trial pit.

1.6 Bore Holes

The boring shall be done at tower locations (to be decided by the Employer or his authorized representative) depending upon the necessity. For towers at the river or water body crossings, at critical angle points or dead-end points, the boreholes may be carried out depending upon terrain and type of soil as decided by the Employer. The test-boring through different layers of all types of soil shall have to be carried out by the Contractor as briefed here under.

(a) Boring in soil strata shall be carried out by Shell and Auger or percussion method. No bentonite slurry or any lubricant except water shall be used during boring and drilling. The diameter of the borehole shall be such as to permit the collection of undisturbed samples (UDS) of 90mm to 100mm diameter.

Selection of sampling tube and method of sampling, recording of boring, protection, handling and levelling of samples shall be done as specified in IS 1892 -1979 with the latest revision, if any, after obtaining approval from the Employer or his authorized representative. The Contractor shall furnish in the Geotechnical report in detail the equipment and method of boring actually adopted.

(b) In rock strata, boring shall be done by using a rotary cutting tool tipped with diamonds and equipped to recover cores with double/triple tube core barrels. The drill hole size shall be NX. For each run, Core Recovery and Rock Quality Designation (RQD) shall be noted carefully immediately after cores are taken out of the barrel.

Each and every core piece shall be serially and sequentially numbered from the top downwards as soon as the core pieces are removed from the core barrel. The serial number shall be painted with good-quality enamel paint or permanent marker. All core pieces shall be placed in core boxes in serial order in the correct sequence from the top downwards. Core boxes shall be made according to Specifications laid down in IS:4078.

(c) Depth of boring below ground level shall be 10m unless continuous bedrock is encountered earlier . If the rock is encountered within 10m, the minimum drilling in

the rock shall be 2m. Adequate study of rock and assessment of strength characteristics shall be done, and recommendations shall be given.

(d) For the purpose of payment, rock immediately underlying soil overburden and overlying hard rock and with rock quality designation (RQD) of 10% and less will be considered as "Weathered rock" or "Soft rock". If the RQD is greater than 10%, it will be treated as Hard Rock.

The soft or weathered rock underlying hard rock with a thickness of less than 0.5m will be considered as hard rock for payment purposes. The soft or weathered rock underlying hard rock and with a thickness greater than 0.5m will be considered and paid as soft/ weathered rock only.

(e) Undisturbed soil samples shall be collected for the initial 4.5m depth at every 1.5m interval and at the change of strata. After this initial 4.5m depth, samples shall be obtained, preferably at every 3m or where there is a change of strata.

(f) In case collection of undisturbed samples becomes difficult/ impossible, detailed soil testing on remoulded soil samples is to be considered upon approval of the Employer and reported in the soil report.

(g) Standard Penetration Test (SPT) as per IS: 2131 -1981 shall be conducted in different strata to obtain resistance of soil to penetration at every 1.5m interval and recorded properly. Part of the disturbed soil samples of medium stiff to hard cohesive soils obtained from SPT spoon shall be coated with paraffin wax and sealed immediately on collection to completely retain all moisture within the sample.

(h) Standard Penetration Tests shall also be conducted in weathered/ soft rock with Rock Quality Designation (RQD) less than 10%. In such a case, the test shall be conducted at every 1.5m interval, unless specified otherwise, with the first test at a depth of 0.5m below the elevation at which weathered/ soft rock is encountered. The procedure for the test shall be the same as that in soil, except that penetration corresponding to 20 and 120 blows shall be noted. Also, if the total penetration is more than the seating penetration of 15cm, then the break up of blow count for 15cm seating penetration and for the remaining portion of penetration shall also be given.

(i) Water samples shall be collected from boreholes before the addition of water to the hole. Care shall be taken to see that the water sample is not contaminated by surface water or rainwater. The water sample shall be collected in an airtight, scrupulously clean glass, inert plastic bottle, or jerry can. The bottle shall be rinsed three times with water being sampled before filling. The quantity of each water sample collected shall be about 1 litre. Water samples shall be tested as soon as possible after sampling.

(j) The ground water table shall be recorded carefully during the boring operation and incorporated in the bore log. To ascertain the general groundwater table, inquiries in surrounding villages could be made to find out the highest groundwater table in the year.

(k) Borehole shall be backfilled by bentonite-cement grout after completion. The cement and bentonite for the grout shall be in the ratio 1 to 1 by weight and shall be made into a slurry with no more water than is necessary for placing the slurry in the borehole. If

there is standing water in the borehole, the borehole shall be dewatered first before placing the mix. The pits shall be backfilled with proper ramming using the excavated material.

(l) The Contractor shall submit progressively the copy (soft & hard copies) of data from the fieldwork. As soon as each borehole/ trial pit is completed, the bore log/pit log with all relevant field details shall be submitted.

1.2 Soil Resistivity Measurement

Soil resistivity measurements shall be carried out at every tower. The test shall be conducted in the field as per IS: 3043 by Wenner's four-electrode method for 1.0, 2.0, 3.0 and 5.0m spacing in all directions. Results shall include location, pin spacing, direction, resistance and calculated resistivity along with curves.

1.3 Laboratory Tests

An adequate volume of test samples shall be collected from the site. Samples shall be properly sealed immediately after recovery and transported carefully to the laboratory for carrying out necessary laboratory tests to find out the following parameters in respect of each sample, all as specified in the relevant IS code. The Employer will direct the Contractor on samples to be tested and on the type of tests to be conducted.

The following tests shall be performed on the soil samples:

1. Grain size distribution (Hydrometer tests required for cohesive soils).
2. Liquid Limit, Plastic Limit, Plasticity Index and Shrinkage Limit.
3. Natural Moisture Content, Bulk and Dry Density of soil (on undisturbed soil samples only)
4. Consolidation Tests on undisturbed soil samples or on soil samples compacted to specified density (to establish e-log P curve, pre-consolidation pressure, coefficient of compression Cc, coefficient of consolidation C_v etc.)
5. Specific Gravity
6. Free Swell Index test (Swelling Pressure test, if required).
7. Triaxial Tests (consolidated undrained and consolidated drained as and when applicable) or Direct Shear tests depending on the classification of soil and density of soil. The results shall be represented in Tables, Graphs and Drawings.
8. Permeability Tests
9. Chemical tests on soil samples (either undisturbed soil samples or disturbed SPT soil samples coated with wax) and water at different layers to determine the requirement of protection of concrete and reinforcement steel.
10. Unconfined compression test for cohesive soil (if encountered) on undisturbed soil samples or soil samples compacted to specified density.

The following tests shall be performed on the rock samples:

1. Density, Porosity and Water absorption for rock cores.
2. Crushing strength of rock (with and without saturation for 7 days)

3. Brazilian test on rock core as per IS:10082 (only if adequate rock samples of L/D ratio equal to 2 are unavailable).

1.4 Recommendations

The recommendations based on observations and test results shall encompass theoretical as well as practical considerations for all foundations. Recommendations shall include but not be limited to the following:

(a) Geological description of the site, including that of faults, folds, etc., if any, based on published literature and investigation carried out.
(b) Seismic history of the site, including a brief description of previous earthquakes, if any, giving time, period, duration, magnitude, epicentre location, damage done, maximum ground acceleration produced etc. and relevant details about the design earthquake.
(c) Special considerations, if any, adopted in the design of previous structures of the region because of seismicity, faults, folds etc.
(d) Behaviour of proposed foundations under seismic conditions, including analysis for the possibility of liquefaction and expected settlement under earthquake.
(e) Analysis and recommendations for foundations subject to vibratory actions.
(f) Recommendations in regard to the use of subsurface material for various construction activities and methods for quarrying the same.
(g) Topographical details of the site and recommendations related to site preparation, including classification, source, placement and compaction of fill materials required to bring the general site levels to final grade level, if so warranted; recommendations regarding excavation, stable slopes for excavation, dewatering etc.
(h) The various parameters to be adopted for design, such as cohesion, angle of internal friction, angle of repose, unit weight, elastic moduli and modulus of sub-grade etc.
(i) Ultimate Bearing Capacities of various soil strata, defining the limiting changes of the routes. These values shall be based on shear strength and settlement consideration.
(j) On the basis of the above data and subsurface stratification, the definition of foundation types is to be adopted along the route, including the feasibility of adopting undercuts.
(k) Recommendations and precautions (if required) to guide construction activity such as mode of excavation for foundations, de-watering, backfilling etc.
(l) Comments on the chemical nature of soil and groundwater with respect to potential deleterious effects on concrete and steel and recommended protective measures.
(m) Seismic history of the site, including a brief description of previous earthquakes,
(n) Study on the probability of landslide (slope stability analysis) and erosion for individual tower location and recommendation on remedial measure.
(o) Specific recommendations regarding the type of soil improvement for weak soils.

(p) Recommended side slopes for cutting and embankment, if any.
(q) Recommendations on lateral earth pressures as relevant.
(r) Past observations and historical data, if available, for structures resting in the area under consideration or for other areas with similar profiles.
(s) Precautions are to be taken such that relevant construction activities do not cause damage in any way to adjoining structures in relation to subsurface characteristics.
(t) Recommendations for additional investigation beyond the scope of the present work if the Contractor considers such investigation necessary.

1.5 Submission of Soil Investigation Report

The Contractor shall submit a detailed Geotechnical Investigation report (in SI units) in both soft & hard copies. The report shall generally contain the geological history of the site, all detailed boreholes, summarized test data, observations, conclusions and recommendations. Actual field and laboratory observations, calculations of test results, supporting calculations for their recommendations made, etc. shall also be presented as appendices to the report.

CHAPTER 4

TRANSMISSION LINE TOWERS

Where the design is not in the scope of the contractor, the provisions under this chapter would be limited only to the extent applicable. For this project, the tower and foundation designs will be furnished by the Employer and accordingly, the tower design parameters under this chapter may not be applicable. However, all other relevant portions of this chapter would be applicable to ensure that the material, workmanship and other issues under the scope of work are not compromised.

1.0 Type of Towers

1.1 Non-Snow Towers

Towers located below 2500m level are classified as Non-Snow Towers and shall be categorized as given below:

Type of tower	Designation of tower	Typical use
Small Angle Tower (0-15°)	B	To be used for line deviation up to 15° with normal span and also for longer span with smaller angles.
Medium Angle Tower (15-30°)	C	To be used for line deviation for more than 15° and up to 30° with normal span and also for longer span with smaller angles.
Large Angle & Dead-End Tower (30-60°)	D	To be used for line deviation for more than 30° and up to 60° with normal span and also for longer span with smaller angles. These towers will also be used as Terminal Dead End Towers.
Special Towers	SP	These may be required for major river/valley crossing & under specific conditions where normal towers are unsuitable.

1.2 Snow Towers

Towers located above 2500 meters level shall be similarly classified as in 1.1 above, except that the prefix “S” is added for indicating that they fall in the Snow Zone area and have to be designed for snow load. Thus, towers falling in Snow Zone are classified as SB (Snow B), SC (Snow C), SD (Snow D) & SSP (Snow Special) towers.

1.3 Height of Towers

The height of the basic body of all tower types shall be as follows:

Voltage Level (kV)	Height of basic tower body up to the lowest conductor attachment (meter)
66	12.85
132	14.0
220	18.0

The height and span of SP and SSP-type towers shall be decided as per site requirements after the topographical survey and tower spotting are completed.

Towers for each type of construction shall be capable of being extended by 3, 6, 9, 12, and 18 m without alteration to the standard body. The towers shall be designed in such a manner that the members and connections at any level will not have to be changed when fitted with any combination of leg and body extensions at lower levels or used independently of extensions at lower levels.

1.4 Base Width of Towers

In view of difficult terrain and to minimize the total cost of towers, foundations, benching, and rock cutting/revetment work, Narrow Base Towers shall be used, and the base width of Normal as well as Special towers shall be kept to a techno-economic optimum value. The maximum base width i.e centre to centre distance between tower legs at the point of connection between the tower leg and chimney of the different towers with the highest extension, shall be limited to the following:

1.4.1 Base Width for Single Circuit Towers

a) **66 kV line**

Non-Snow Towers		**Snow Towers**	
Tower Type	**Base Width (m)**	**Tower Type**	**Base Width (m)**
B+9	3.0	SB+9	4.0
C+9	3.5	SC+9	5.0
D+9	4.0	SD+9	6.0
SP+9	5.0	SSP+9	7.0

b) **132 kV line**

Non-Snow Towers		**Snow Towers**	
Tower Type	**Base Width (m)**	**Tower Type**	**Base Width (m)**
B+9	4.0	SB+9	5.0
C+9	5.0	SC+9	6.0
D+9	6.0	SD+9	7.0
SP+9	7.0	SSP+9	9.0

c) **220 kV line**

Non-Snow Towers		**Snow Towers**	
Tower Type	**Base Width (m)**	**Tower Type**	**Base Width (m)**

B+9	4.0	SB+9	5.0
C+9	5.0	SC+9	6.0
D+9	6.0	SD+9	7.0
SP+9	8.0	SSP+9	9.0

1.4.2 Base Width for Double Circuit Towers

The base width requirement for 66kV and 132kV Double Circuit Towers is normally 1.5 times the base width of Single Circuit Towers. The base width requirement for Double Circuit 220kV Tower is 1.6 times the base width of a 220kV Single Circuit Tower. Accordingly, the base width requirement for Double Circuit towers shall be calculated from the base width provided for Single Circuit towers above.

All Tower types (Type B, C, D, SB, SC, SD, SP and SSP towers) are referred to as TENSION or STRAIN TOWERS in these Specifications.

2.0 Tower Loadings

The loads and load-combinations shall generally be in accordance with IS 802 latest editions and as per the guidelines set here-in, adopting the more demanding parameters in case of a clash.

The following points have to be considered while calculating the loads on the towers.

2.1 Transverse Loads

Under broken wire conditions, the transverse load due to wind on the conductor or OPGW shall be assumed to be not less than 60% of the load under normal conditions (50% of unbroken span and 10% for broken conductor hanging from the tower on the other side) and transverse load due to deviation not less than 50% of that under normal condition.

2.2 Vertical Loads

While computing compression, the weight of the conductor and OPGW will be taken based on the maximum weight span. However, in evaluating the tension or uplift, the weight of the conductor and OPGW will be taken based on the minimum weight span, and the weight of the insulator string only is to be considered. The effect of unbalanced vertical loads will also be taken into account for the design of tower members.

2.3 Longitudinal Loads

The loads due to the mechanical tension of the conductor and OPGW shall be resolved into longitudinal and transverse components. This shall be taken for the maximum as well as minimum angle of deviation for which the tower is designed, and the condition which is most stringent for a member shall be adopted.

3.0 Material

3.1 Steel

The tower members shall be fabricated using mild steel structural sections having yield strength as per IS:2062 / 1999. High Tensile Steel may be used for the tower members subject to the following restrictions:

(a) The work using HT steel shall conform to all relevant IS codes of practice in addition to all that has been specified in these specifications.

(b) Either all members of all towers for the entire works shall be of HT steel, or only leg members of all towers shall be of HT steel, while all other members can be of Mild Steel for the entire works. No other combination of HT and MS shall be allowed.

3.2 Zinc

Zinc used for galvanizing shall be of 99.95% purity.

3.3 Bolts, Nuts and Flat Washers

All bolts shall conform to Property Class 5.6 as per IS:12427/1988. The diameter of bolts used shall be 16 mm or 20 mm, but only one size shall be used for one type of tower. Nuts shall conform to Property Class 5 as per IS:1363(Part-III/1982), with mechanical properties conforming to IS:1367 –1980. Galvanizing of bolts and nuts shall conform to IS:1367-1980. Testing of bolts and nuts shall be done in accordance with IS:1367 / 1980. Mild steel flat washers of 5 mm thickness shall be used with every bolt and nut. The manufacturing details shall conform to the relevant IS for flat washers.

3.4 Sectional Properties of Structural Members of Towers

Structural steel angle sections manufactured according to the latest IS:808 1989 will be used for the fabrication of towers.

4.0 Erection Stress

Where erection stress combined with other permissible co-existent stresses could produce a working stress in any member appreciably above the specified working stress, such additional material shall be added to the member, or such other provision made as is necessary to bring the working stress within the specified limit.

5.0 Design Calculations & Drawings

The following design calculations and drawings are required to be furnished for all types of towers:

a) The Contractor shall submit a detailed design of the tower, extensions, stub template, clearance diagram, outline diagrams and structural drawings etc.

b) After testing the tower, the Contractor shall furnish final design calculations and drawings, detailed assembly drawings, shop drawings indicating the details of chipping, notching etc., where required and erection drawings etc. The Contractor shall also submit copies of finally approved structural drawings, bill of material, foundation designs & outline-diagram of structure. Reproducible of all designs/drawings will also be submitted to Employer after the same has been finally approved.

An approved computer program shall be used for the Three-Dimensional Space-Truss analysis of latticed towers supporting the transmission line. All information necessary for the approval of the analysis and design of the towers and tower foundations shall be submitted to the satisfaction of the Employer, in hard copy form and in electronic form on CDs or Pen Drives. Analysis of towers by manual methods and other approximate methods shall not be allowed.

6.0 Detailing of Tower Members

The Contractor shall be required to keep in consideration the following points while designing the structures:

a) All the members shall be designed out of structural mild steel sections or gusset plates having their sizes and properties as per relevant Indian Standard Specification bolted together by means of bolts and nuts only.

   Use of mild steel rounds will be permissible only for making the hangers or U-Bolts, or extension links for supporting the insulator strings and OPGW clamps at the tower, for which welding may be permitted if considered necessary.

b) All parts shall be made accurately to standard gauges so as to facilitate replacement and repairs. All corresponding parts of similar towers shall be interchangeable.

c) Members shall be connected directly to each other without using gusset plates, wherever practicable.

d) All the connections shall be detailed to minimize the eccentricity of the connections.

e) Notching shall not be normally permitted, but if unavoidable, the cut of outstanding flanges to the extent of sheared edge distance can be provided. Chamfering of the flanges up to 45° may be done. In the case where clearances are critical, the minimum sheared edge distance from bolt-hole centres shall be retained.

f) At all places where there is a gap between two connected members, mild steel packing washers or wrought iron tapered washers shall be provided, wherever possible. The size of the washer shall be determined as follows:

   i) Thickness: Equal to gap

ii) Length and breadth: As per edge security considerations for the sheared edge.

g) The gap between the ends of two connected members in a butt joint shall not be more than 6 mm or less than 4 mm.

h) No individual members in any type of towers, extensions, templates and special structures shall be longer than 6 metres.

i) Same stub in respect of section size, length, and fabrication details shall be suitable for one type of tower with or without 6 metre extensions, irrespective of the type of foundation where it is used. For other extensions, the stubs may differ, but the same stub should be suitable for all types of foundations for one type of tower.

j) For members of a double diagonal web system which are bolted at their point of intersection, the slenderness ratio (KL/r) shall be determined from the following criterion:

i) 'L' is the greatest distance from the point of intersection to either of the end connections, and 'r' is the minimum radius of gyration.

ii) 'L' is equal to 0.75 times the distance between end connections, and 'r' is the radius of gyration of the members for its axis parallel to the plane of the connected leg.

iii) In the criteria (i) above, if the member is supported intermediately, then the radius of gyration of members for its axis parallel to the plane of the connected leg may be considered. But in such cases, check as specified in criteria (ii) is also to be considered, and the worst slenderness ratio of the two only shall be considered for design.

However, the following may be considered to offer restraint in the axial direction.

i Hip bracings of patterns shown in sketches contained in example B-8.3 and B-8.4 (p 10) of IS:802 (Part-I/Sec-2)-1992.

ii Horizontal redundant member fixed leg to leg and passing through the point of intersection of members of double angle-web system, if used, the KL/r of such horizontal leg shall not exceed 250 where 'L' is the distance between end connections (on legs) and 'r' is the radius of gyration of the member for its axis parallel to the plane of connected legs.

iii Corner plan bracings shall not be considered to be effective in offering restraint in the axial direction.

k)

i) In the case of K-bracings, the KL/r of the horizontal main bracing member shall not exceed 200 where 'L' is the distance between end-connections (on main leg members) and 'r' is the radius of gyration of the members for its axis parallel to the plane of connected legs.

ii) If plan bracing with complete and perfect framing and giving support to the central node is provided, KL/r of horizontal main bracings shall be considered according to bracings design.

iii) Hip bracing of the pattern shown in B-9.3 and B-9.4 (p.11) of IS:802 (Part-I/Sec.-2) 1992.

iv) Corner plan bracings shall not be considered to be effective in offering restraint in the axial direction.

l) The angle between any two members common to a joint of a trussed frame shall preferably be greater than 20° and never less than 15° due to the uncertainty of stress distribution between two closely spaced members.

7.0 Fasteners

For connecting members, bolts and nuts of 16 mm dia or 20 mm dia will be used with 5 mm flat washers underneath.

The following minimum flange width of sections, rolled edge distances, sheared edge distances, and bolt-to-bolt distances from the centre of the bolt holes shall be maintained:

Diameter of bolts	Minimum flange width of sections	Minimum rolled edge distances	Minimum sheared edge distances	Minimum bolt-to-bolt distances
16 mm	45 mm	20 mm	23 mm	40 mm
20 mm	50 mm	25 mm	28 mm	50 mm

The minimum width of flanges having no bolt holes shall be kept not less than 30 mm. While dimensioning the gauge lines, allowances should be kept for mill rolling tolerance on the negative side to the extent of 2.5 per cent of flange width. The distance from the centre of a bolt hole to the face of the overhanging flange of an angle or other members would be adequate for conveniently tightening the bolts by socket wrench or box spanners. But the minimum distance from the centre of bolts to the inner side of the overhanging flange should not be less than 18 mm. All measurements should be done from the outer heel edge. The length of bolts shall be such that the threaded portion does not lie in the plane of contact of members.

It shall be ensured that the threaded portion of the bolt protrudes not less than 3 mm and not more than 8 mm over the nut after it is fully tightened. All nuts shall be fit hand tight to the point where the shank of the bolt connects the head. No bolt shall connect

aggregate thickness of more than three times the bolt diameter, and also the number of members carrying stress to be connected by a single bolt shall not generally exceed three (including gussets and packing). Bolt at the joint shall be so staggered that nuts may be tightened with spanners without fouling. 5 mm flat washers shall be provided for insertion under all nuts. The length of bolts shall be determined with this provision in sight. Any reinforcement of unbraced stubs by providing cleats etc., shall not be permitted.

8.0 Stub Setting Templates

For the correct setting of tower stubs, stub templates shall be designed, fabricated and supplied by the Contractor at his own cost for normal towers, towers with extensions and special towers/structures. The templates shall be made out of the same steel sections as used for tower members and shall be joined by bolts and nuts. The templates of towers shall be adjustable type so as to make them suitable for normal towers as well as towers with extensions. The stub templates shall be galvanized.

The slenderness ratio of any member in the template shall not exceed 250.

In the case of towers with unequal legs, props shall be used properly to achieve the correct alignment of the stubs, subject to prior approval from Employer.

9.0 Provision of Step Bolts

Provision of blank holes for step bolts of 16 mm diameter and 175 mm long, spaced 450 mm apart and extending from about 2.5 m above the ground level to the top of the tower, shall be made on one leg of each type of tower below waist level and on diagonally opposite legs above waist level. Proto-type towers, however, will be type tested without step bolts by keeping the holes blank.

7.0 Materials and Workmanship

Unless otherwise specified, all material shall be of the outdoor type, of the best quality and workmanship capable of satisfactory operation under the operating and atmospheric conditions specified. Unless otherwise specified herein, the materials shall conform, in all respect, to the requirement of the latest edition of the relevant Indian Standard Specifications on that behalf. Wherever Indian Standard Specifications have not been formulated, IEC shall apply.

The contractor may offer materials manufactured in accordance with other well-recognized standards but shall, in that case, supply a copy of the standard Specifications adopted by them and shall clearly mention in what respect such standard specifications differ from corresponding Indian Standard Specifications. However, material quality and strength should not go below the stipulations and requirements of Indian Standards.

All materials shall be erected after being approved and passed by the Employer. The erection of the lines shall be done according to the best practices being followed in the erection of EHV/UHV lines, with the best erection equipment so as to give satisfactory results.

7.1 Details of Tower Fabrication and Workmanship

The tower members shall be fabricated in accordance with IS:802 (Part-II)-1992 or latest version. The following important points that are relevant to fabrication work are described. The Employer reserves the right at all times to inspect the fabrication of tower parts at the Contractor's or subcontractor's works.

a) All parts of the towers shall be fabricated in accordance with the shop drawings as provided by the Employer or prepared from approved detailed assembly drawings.

b) Towers shall have bolted connections. Welding shall not be permitted at any point unless otherwise previously approved by the Employer.

c) The tower members shall be accurately fabricated so that these can be bolted together easily at the site without undue strain on the bolts or members.

d) No angle members shall have the two-leg flange brought together by closing the angle.

e) Structures shall be so designed that all parts shall be accessible for inspection and cleaning pockets or depressions which would hold water shall have drain holes. It will be ensured that the stressed members will not have any blank hole after final assembly, except for holes on account of step bolts or planned holes in stubs.

f) Fabrication of the towers shall be carried out in conformity with the latest practice employed in manufacturing transmission line towers by using power-driven cropping, punching, shearing and drilling machines. Relevant Indian Standards shall govern the extent of various operations, and the standard practices followed for such operations.

g) No rough edge shall be permitted anywhere in the entire structure. The flanges of the angle sections at the ends of members shall be properly chamfered if there are even slight chances of fouling with other members or if they cause difficulty in the proper tightening of the bolts. All clippings, back cuts, grindings, bends, holes etc., shall be true to detailed drawings and free from burrs.

h) Full inter-changeability shall be guaranteed.

i) No welding, filling or plugging shall be permitted unless previously approved. Welding of two or more pieces to obtain the length of members specified will not be permitted.

j) All sections, plates and bars shall be straightened before any work is done on them free from twists, carefully levelled and made true to detailed drawings by methods which will not injure the materials so that when assembled, the adjacent surfaces are in close contact throughout. Hammering shall not be permitted for straightening or flattening of members.

k) Cutting of members shall be affected by shearing, cropping, flame cutting or sawing. Members over 10 mm thick shall be sawn or flame cut, followed by grinding. The surface so cut shall be clean, smooth, reasonably square and free from any distortion.

l) Holes in the members shall be either punched or drilled with the help of jigs and fixtures. Drilled holes will be preferred. However, members up to 12 mm thickness may be punched, and members over 12 mm thickness shall be drilled. All burrs left after drilling or punching should be removed completely. Holes adjacent to the bend shall be drilled or punched after bending.

m) Holes for bolts shall be circular. Oval or lobed forms of holes shall not be permitted. The diameter of the hole shall be 1.5 mm more than the diameter of the bolts.

n) The holes shall be perpendicular to the plates or angles.

o) The accuracy of the location of holes shall be such that for any group, when assembled, it shall admit the bolt at right angles to the plane of connection.

p) Members shall be bent hot, but in case of small bends, cold bends may be done with the prior approval of the Employer, provided no fracture of material occurs. All the bending operations shall be done by pressure. No bending of members shall be done for slopes above 45°.

q) When members are spliced by a lap joint, the heel of the inside angle shall be rounded to the minimum possible radius consistent with proper fit with the fillet of the outside angle. The thickness of the ground heel shall not be less than that of the leg. Flat healing will not be allowed.

8.0 Tolerances

The following fabrication tolerances shall be allowed as per IS:7215-1974 or latest version.

i) The maximum allowable difference in diameter of the holes on the two sides of the plate or angle shall not exceed 0.8 mm i.e. allowable taper in punched hole shall not exceed 0.8 mm in diameter.

ii) The tolerance cumulative and between consecutive holes shall be within ±0.5 mm.

iii) The tolerance on the overall length of members shall be within ±1.6 mm.

iv) The tolerance on the back mark shall be within ±0.5 mm.

9.0 Marking

All parts covered under supply of the structures shall have distinct marks, as given in the detailed assembly drawing and Bill of Material, made with a steel punch and sufficiently indented with letters and figures not less than 12 mm x 18 mm in size so that these are clearly visible after galvanising. The letters shall indicate the type of towers B/C/D/SP SB/SC/SD/SSP in which the member is to be used, and the numeral shall indicate the member mark as per drawing and bill of material. These erection marks shall be stamped near one end and in the same relative position on each piece in such a way that the mechanical properties of members are not affected. Special care must be taken to stamp the correct erection mark. The Contractor shall be entirely responsible for any disruption of work, delay in completion of the line, or delay in payment of the bill on account of wrong erection marks.

10.0 Galvanising

All members of the towers, including stubs along with the cleats, bolts and nuts, fixing attachments for insulator strings and OPGW clamps, extension links, if any, and the fixing attachments for danger, number and phase plates shall be galvanised.

The galvanising shall be done after all fabrication work is completed on the members by hot dip process. Galvanising shall be done as per IS 4759 – 1996 or latest version. Material to be galvanised is to be kept free from grease and paint, etc., during and after fabrication. After galvanising, the surface shall be free from all sharp edges and metal nodules, and there shall be no clogging of bolt holes due to the stay of zinc.

The Contractor shall submit, before taking up mass fabrication and galvanising, a full specification of the quality of zinc to be used, stating its purity and the process of galvanising adopted by them for more authoritative and better control on the quality of galvanising. They shall also state the minimum and maximum percentage increase in the weight of the completely galvanised materials compared to their black weight and the quality of zinc required per metric ton of the black steel weight of the fabricated structure.

Tests on the galvanised samples of fabricated materials shall be carried out regularly in accordance with IS:2633 with the latest amendment. If the galvanising does not satisfy testing requirements, the entire batch represented by the sample piece shall be rejected and re-galvanised to satisfy the test requirements without any extra expenditure to the Employer's account. All galvanised towers and accessories shall be treated with sodium dichromate or an approved equivalent solution after galvanising so as to prevent white storage stains. Galvanising of bolts and nuts shall be done as per IS:1367 - 1980. In addition, a strict inspection of the galvanised material shall be carried out by the Contractor before dispatch, and any visible or suspected defects shall be rectified forthwith.

11.0 Packing

Light angle sections shall be wire bundled, and heavy angle sections may be sent loose. Cleat angles, plates, hangers, U-bolts, pack washers and similar loose pieces shall be nested and bolted together in multiples or securely wired together through holes.

Bolts, nuts, washers and other attachments shall be packed in non-returnable double gunny bags and accurately tagged in accordance with contents. The packing shall be done in such a manner as to avoid losses/damages during transit. Each bundle or package shall be appropriately marked. No extra charges for packing shall be admissible, and packing charges shall be assumed to be included in the contract rates.

CHAPTER 5

TESTS & INSPECTION OF MATERIALS

For this Project, the tested tower designs would be furnished by the Employer. Accordingly, tower testing requirements at accredited test beds for ascertaining the adequacy of the design, as indicated in this chapter, would not be applicable. All other requirements of tower testing, including proto-assembly, material testing etc., for the towers and all testing requirements of other materials, if applicable, will be carried out.

1.0 Tests at Manufacturer's Works

The plant will be inspected during manufacture and testing by the Employer. The Contractor shall provide every facility to enable the Employer to carry out the necessary inspection of the plant, and the cost of all tests during manufacture and preparation of test records shall be deemed to be included in the contract price except for the air fares (to and fro Bhutan). Apart from the tests specified here below, other tests mentioned in the Specifications of individual components of the works shall also be performed to the satisfaction of the Employer and shall be deemed to be included in the Scheduled Rates of the respective items. The dispatch clearance will be issued to the Contractor by the Employer on receipt of the inspection report.

For inspection of any materials, tower parts, insulators, hardware and related components, personnel of grade B1 and above shall be deputed, of which at least one representative shall be from the Engineering and Research Division, one from respective Project Office, while any additional representatives, if required, may be deputed from other offices.

The materials shall be inspected and tested during manufacture by an approved inspection firm or laboratory and be accompanied by appropriate compliance certification as part of the extent of work. The Employer and/or his representatives may also elect to inspect materials from time to time at his own expense. It is the responsibility of the Contractor to advise the Employer that the materials shall be available for inspection.

The passing of such inspection or test will not, however, prejudice the right of the Employer to reject the Plant and any or all of the material if it does not comply with the Specifications or give complete satisfaction in service.

Instruments shall be approved and shall if required by the Employer, be calibrated by the National Physical Laboratory or such other body as may be approved at the expense of the Contractor.

Unless otherwise specified in this Contract, selection of test samples, numbers of specimens and acceptance of results shall be in accordance with the terms of the relevant Indian standard, where applicable. Where no terms exist, the Employer is to instruct details in advance of the inspection and tests in response to the request of the Contractor.

Breakdown test voltages shall be measured by means of a crest or electro-static voltmeter connected to the high voltage side of the transformer or by an instrument connected to the low voltage side of the transformer supplying the test voltage and calibrated in an approved manner by means of a sphere spark gap. Electrical tests, other than impulse tests, shall be carried out at a frequency of 50 Hz.

The following tests shall be carried out at the manufacturer's works:

1.1 Type Tests

All equipment/materials shall conform to type tests, including routine, acceptance and additional tests in accordance with the relevant Standards and Codes. The Bidder shall submit copies of type tests for each equipment along with his bid. The type of tests report submitted shall be of the tests conducted within the last five (5) years prior to the date of Bid opening. In case the type tests reports are of the tests conducted earlier than five (5) years prior to the date of Bid opening, the Contractor shall repeat these test(s) at his cost. If the type tests reports submitted are of tests conducted within five (5) years prior to the date of Bid opening but do not conform to the requirements of the tender and are not considered acceptable to the Employer due to inadequacies/inconsistencies/certificates being from non-qualified agencies or /any other reason, the Contractor has to carry out the Type Tests because of such invalid certificate and/or absence of such certificates, at his own cost without any additional cost to the Employer.

2.0 Conductors

Routine Tests: Samples of individual wires from each length of the finished conductor shall be taken at the option of the Employer and subjected to the tests stated in the specified standards. Where practicable, tests shall be taken on samples of individual wires before stranding and related to the tests taken after stranding. In the event of the sample from any length not passing these tests, a second and third sample shall be taken from the same length, and if one of these also fails under the test, the length from which it has been taken shall be rejected.

3.0 Insulators

Routine Tests: Sample and type tests shall be carried out on all types of insulators used in the Contract. Type tests, including radio interference type tests, would be waived on the production by the Contractor of the requisite certificates by an independent Testing Authority showing that the insulators concerned have successfully passed type tests in accordance with IEC 383 or such other standard as may be approved.

4.0 Insulator Strings

Design Tests: One suspension and one tension string of each type, selected by the Employer, shall be subject to the following tests in accordance with the provisions of IEC 383 or such other standard as may be approved :

(i) Radio interference tests (Grade II): For these tests, single unit RI tests will be required on the insulator discs, which are used to make upp the complete string.

The two noisiest discs should be placed at the line end, but otherwise, the order may be random.

(ii) Impulse tests: Dry withstand and dry 50% flashover, positive and negative polarity.
(iii) Power frequency tests: Wet withstand and wet flashover.

Tests shall include vibration dampers and any other fittings attached to the conductors in service and shall be made with and without arc horns.

5.0 Insulator Fittings

Routine and sample mechanical tests shall be carried out on fittings in accordance with the specified standards.

6.0 Tension Clamps and Joints

Two samples each of tension clamps and tension and non-tension joints shall be submitted to mechanical and electrical type tests, galvanising and mechanical routine tests in accordance with the specified standards. The Employer, from time to time. may make further similar tests as may be required to ensure that the quality of the product is being maintained throughout the Contract

7.0 Tests on OPGW and accessories

All tests as required by the Employer shall be carried out by the Bidder as per relevant standards codes both at the factory before dispatch and at the site after installation. The Contractor shall submit a Factory Acceptance Test (FAT) proposal for the OPGW and its hardware, and the tests and inspection shall be carried out as per the approved FAT plan. The FAT plan should be submitted at least two months before the proposed date of carrying out the FAT.

The Bidder shall demonstrate in the field compliance of the values, cable performance, and/ or all other parameters, by tests, with the corresponding guaranteed values indicated in the offer. A transmission loss test, tension test to check the cable's strength, pulley test to survey the change in transmission loss, and electrical property test shall be performed before shipment of the OPGW drums. After receiving the OPGW drums at the site, before stringing the cable, the Bidder shall carry out the OPGW core breakage test. Testing of the optical fibre cables and accessories shall be carried out as per ITU-T recommendation. The tests to be performed shall include but not be limited to the following:

- Mechanical and Optical Parameters

Tests shall be carried out as per the approved Factory Acceptance Test (FAT) plan to determine the following parameters:

a) Recommended maximum allowable tensile stress (N/sq.mm)
b) Recommended maximum allowable Every Day Stress (N/sq.mm)
c) Cable overall diameter

d) Core diameter
e) Mode field diameter
f) Cladding diameter
g) Coating diameter
h) Non-circularity of the core
i) Non-circularity of the cladding
j) Cladding ovality
k) Core-cladding concentricity error
l) Thickness of the PE Sheath
j) Maximum theoretical numerical aperture
m) Attenuation (each type separately, e.g. material, splice, etc.)
n) Bandwidth
o) Dispersion (material and waveguide)
p) Tensile test
q) Crush test
r) Thermal cycle test
s) Diameter of armouring wires
t) Breaking load of armouring wires
u) Attenuation characteristics under tensile stress and temperature change.

Test reports and certificates for OPGW cable and brought-out components shall be submitted for Employer's approval.

8.0 Tests & Inspection of Towers

8.1 General

All standard tests, including quality control tests in accordance with relevant Standards and Codes, shall be carried out in cases of all standard types of towers with their extensions.

In addition to the provisions contained elsewhere, the following shall also apply:

a) The Contractor shall keep the Employer informed in advance of the time of starting and of the progress of manufacture, fabrication and galvanising of various tower parts at various stages so that arrangements can be made for inspection.

b) The acceptance of any batch of items shall in no way relieve the Contractor of any of his responsibilities for meeting all the requirements of the specification. They shall not prevent the subsequent rejection if any item of that batch is later found defective.

The Employer or his representative shall have free access at all reasonable times to those parts of the Contractor's works which are concerned with the fabrication and galvanising of the steelwork and shall be provided with all reasonable facilities for satisfying himself that the fabrication, galvanising and packing are being done in accordance with the provisions of this specification. Unless specified otherwise, inspection shall be made at the place of manufacture prior to despatch.

Should any fabricated member of the structure be found not to comply with the approved design/drawing or provisions of the specification, it shall be liable to rejection. No member, once rejected, shall be re-offered for inspection, except in cases where the Employer or his authorised representative considers the defect as rectifiable. Defects which may appear during fabrication shall be made good with the consent of and according to the procedure laid down by the Employer.

The Contractor shall supply all gauges and templates necessary for inspecting fabricated material. The correct grade and quality of steel and zinc shall be used by the Contractor. To ascertain the quality of steel/zinc used, the Employer may, at his discretion, get the raw and fabricated material tested at an approved laboratory. Proto-type of normal structures and extensions will be manufactured and assembled for inspection by Employer before the final approval of the drawing and bill of material and mass fabrication.

8.2 Tower Tests at Works

One of each type of tower, complete with the maximum body extensions or as may be advised by the Employer, shall be tested as given below as per IS:802 (Part-III), latest edition, for the following conditions to compare the actual strength with the calculated strength of the towers.

i) Specified ultimate design loads in all of the normal and broken wire conditions,

ii) Destruction under normal conditions

As and when the testing plan is approved by the Employer, Contractor shall arrange these tests, and the Employer will pay for such tests. The tested tower shall be the property of the Contractor. Proto-type towers, however, will be type tested without step bolts by keeping the holes blank. No part of any tower subject to test shall be supplied against the Contract. To avoid any possibility of such tower members being supplied, the Contractor shall put a special mark, as decided in consultation with the Employer, on each tower part used in the test tower.

The black tower shall be subjected to design and destruction tests by first applying test loads equivalent to the specified ultimate design loads and applied in the manner as approved by the Employer. The tower shall withstand these tests without showing any sign of failure or permanent distortion in any part. Thereafter the tower shall be subjected to destruction by increasing the loads further in an approved manner till it fails. The Contractor shall provide facilities to the Employer or their representatives for inspection of materials during the manufacturing stage of proto assembly and also during testing of the tower.

The Contractor shall submit to the Employer for approval his detailed programme and proposal for testing towers showing the methods of carrying out the tests and manner of applying the tests load. After the Employer has approved the test procedures and programmes, the Contractor will intimate the Employer about the dates for carrying out the tests at least 20 days in advance of the scheduled date of tests, during which the Employer will arrange to depute his representatives to be present at the time of carrying

out the tests. Five copies of the test plan and load schedule shall be supplied. No testing shall be done unless the testing plan and load schedules have been approved earlier.

If the Contractor does not have all the facilities for the testing of the tower at his own test bed, the Employer has every right to ask the Contractor to test the tower at such test bed where all the facilities exist, without any extra charges, whatsoever, beyond the Contract rates.

The testing charges for each type of tower shall be paid only once upon successful testing of the tower to the satisfaction of the Employer. Employer's responsibility for paying against test charges is limited to Contract rates only. Any replacement or modification required in the towers to make them safe up to the specified loads under the specified conditions as a result of the above test shall be done at the Contractor's cost.

The Contractor shall ensure that the specification of materials and workmanship of all towers actually supplied conform strictly to the towers which have successfully undergone the test. If any deviation is detected, the Contractor shall replace such defective tower parts immediately. All expenditure incurred on account of the use of such defective part(s), including its appropriate replacement, and re-testing of tower parts if desired by the Employer, shall be borne by the Contractor. No extension in delivery time shall be allowed on this account.

8.2.1 Tower Testing Procedure

8.2.1.1 Preparatory Work

a) Leg Anchorage

Each type of tower to be tested shall be a full-scale proto-type black tower and shall be erected vertically on the rigid foundation with as much unbraced portion of the stub protruding above ground level as approved in the design. The tower erected on the test bed shall not be out of plumb by more than 1 in 360.

b) Calibration of Measuring Instruments

All measuring instruments shall be calibrated in a systematic manner with the help of standard weights. The calibration shall, before commencing the test on each tower, be done up to the maximum anticipated load to be applied during testing. Calibration curves for the instruments shall be drawn, and the test loads suitably corrected with the help of these curves.

c) The tower shall be tested with blank holes for step bolts on one leg. The tower under test should be so erected that blank step bolt holes are on the compression leg of the tower.

8.2.1.2 Method of Load Application

a) Load shall be applied according to the rigging diagram through normal wire attachments, angles or bent plates. As far as possible, all loads on towers shall be applied through strain gauge dynamometers.

b) The various types of loads, i.e. transverse, vertical and longitudinal, shall be applied in such a way that there is no impact loading on the tower due to jerks from the winches.

c) The application of loads should be such that it simulates nearly the actual load application in the transmission line. For the suspension-type tower, the loads shall be applied through flexible ropes on plates of the same side used in the design and inclined at 45° attached to the structure.

8.2.1.3 Load and Deflection Measurement

All loads shall be measured through a suitable arrangement of strain devices. Positioning of strain devices shall be such that the effect of pulley frictions is eliminated. In case the pulley friction cannot be avoided, the same shall be measured by means of standard weights and accounted for in the test loads.

Tower deflection under load shall be measured by suitable procedure at the top cross-arm level on the front sides of the transverse and longitudinal faces or front and rear sides of transverse faces. Deflection readings shall be recorded for the "before load", "load on", and "load off" conditions.

8.2.1.4 Testing Procedure

8.2.1.4.1 Bolt Slip Test

In the bolt slip test, the test loads are gradually applied up to 50% of the ultimate design loads under normal conditions and kept constant for two minutes at these loads and then the loads are released gradually.

8.2.2.4.2 Normal Load/Broken Wire Load Tests

All the loads shall be applied gradually up to the ultimate design loads in the following steps of the percentage of limit and shall be released in a similar manner.

50 percent 75 percent 90 percent 95 percent, & 100 percent

8.2.2.4.3 Observation Period

a) Under normal and broken wire load tests, the tower shall be kept under observation for signs of failure for two minutes (excluding the time for adjustment of loads) for all the intermediate steps of loading up to and including 95 per cent of the above design loads.

b) For normal as well as broken wire tests, the tower shall be kept under observation for five minutes (excluding the time for adjustment of loads) after it is loaded up to 100% ultimate design loads. The counting of waiting time shall start when all the loads are

fully applied. In this respect decision of the Employer's representative witnessing the tower test shall be final and binding.

c) While the loading operations are in progress, the tower shall be constantly watched. If it shows any tendency of failure anywhere, the loading shall be immediately stopped, released and then the entire tower shall be inspected. The re-loading shall be started only after corrective measures are taken.

8.2.2.4.4 Recordings

a) The deflections of the tower shall be recorded at each intermediate and final stage of the normal load/broken wire load test by means of the theodolite and graduated scales fitted on the tower.

b) The graduated scales shall be about one metre long with marking up to 5 mm accuracy.

8.2.2.4.5 Check for Mechanical Strength of Tower

The structure is considered to be satisfactory if it is able to support the specified ultimate load for 5 minutes as stipulated herein with no visible local deformation after unloading (such as bending or buckling) and no breakage of elements.

8.3 Material Test

Steel materials used for the tested tower shall be subjected to tensile load or bend test in accordance with Indian standards. The Contractor shall perform the test without any additional cost. The test specimens shall be selected as follows:

i) Two samples were selected from destructed members of each tower.

ii) Two samples were selected from the unrestricted members of each tower.

8.4 Test Report

The report shall include the following:

a) The type of tower tested
b) The name and address of the tower manufacturer
c) The name and address of the Client
d) The dates and location of testing
e) The name of persons present during the test.
f) A list of various assembly and shop drawings relating to the tower tested, including any modification of the drawings referred to.
g) A dimensioned line diagram of the tower showing the various load points and directions of loading to be applied and a table with the specified loads.
h) Diagram showing the rigging arrangement used to apply the test loads.
i) Brief description of the test facility, including the number, location, range and calibration charts of tables of every load transducer, as well as the accuracy of the equipment used to measure the test loads.

j) One table per test showing the loads required at various points on the structure and for the various loading steps.

k) One table per test showing the various deflection values which may have been recorded.

l) In the case of failure.

   i) A table showing the maximum loads applied to the structure just before the collapse

   ii) A brief description of the failure

   iii) The dimensional and mechanical characteristics of the failed elements.

m) A certain number of photographs showing the whole of the structure and details of the failure.

n) Material test reports.

9.0 Tests at Site

Where ordered by the Employer, site investigation tests shall be carried out by the Contractor and such cost is deemed to be included in the schedule of rates for respective items or similar items in the Bill of Quantities. The rates may include all necessary manpower and labour, transport, work, materials instruments and any other costs and expenses entailed in testing to a satisfactory result.

9.1 Concrete Tests

The Contractor shall carry out tests on samples of concrete from the foundation works, as required by the Employer. No separate payment shall be paid for the Concrete test.

The test specimens shall be cubes of 150 mm side, and the mould shall be of metal with the inner face accurately machined. Each mould shall be provided with a metal base having a smooth machined surface. The interior surfaces of the mould and base shall be lightly oiled before concrete is placed in the mould.

Test Specimens shall be moulded by placing the fresh concrete in the mould in 50 mm layers, each layer being thoroughly compacted with a steel bar 380 mm long and having a ramming face 25 mm square and weighing 2.8 kg. The concrete may be compacted by vibration, each layer being vibrated by means of an electric or pneumatic hammer or by means of a suitable vibrating table.

Concrete for test specimens shall be taken at the point of deposit. To ensure that the specimens are representative of the concrete in the foundations, a number of samples shall be taken from different points. Each sample shall be large enough to make one test specimen and shall be taken from one point in the work.

The test specimens shall be stored at the site at a place free from vibration, under damp sacks for 24 hours, plus 1/2 hour, after which time they should be removed from the moulds, marked and stored in water at a temperature between 10° C and 21° C until the test date. Specimens that are to be sent to a laboratory for testing shall be packed for transit in damp sand or other suitable damp material and shall reach the laboratory at least 24 hours before the test. On arrival at the laboratory, they shall be similarly stored in water until the date of the test.

The test shall be made at the age of the concrete corresponding to that for which the strengths are specified. Compression tests shall be made between smooth plane steel plates without end packing, and a load shall be applied axially at the rate of approximately 13.8 N/mm^2 per minute. One compression plate of the testing machine shall be provided above seating in the form of a proportion of a sphere, the centre of which coincides with the central point of the face of the plate. Test specimens shall be placed in the machine in such a manner that the load is applied to the sides of the specimens as cast.

The results shall be handed in triplicate to the Employer as soon as possible after testing.

9.2 Measurement of Galvanizing Thickness

The Contractor shall have available on site for the Employer's use an instrument suitable for the accurate checking of galvanizing thickness. The gauge shall be available from the time of arrival of the first consignment of steelwork until the issue of the taking-over certificate for the last line. The cost of the gauge and other operating expenses shall be deemed to be included in the Contract price, and the gauge shall remain the property of the Contractor.

Other tests on galvanizing shall be carried out as described in chapter 4, clause 10.0, "Galvanising".

9.3 Testing of Rock Anchors

Where rock anchor foundations are used in hard rock, as provided for by the Specification, the Contractor shall type test individual anchors by tensile test loading to failure. The type test shall be considered satisfactory if the foundation fails at or above the design's ultimate strength of steel.

Anchors for type testing shall be installed away from permanent foundation anchors but in the same rock. The frequency of type testing shall depend upon the different types of hard rock encountered, and the number of type tests performed shall be such as to give confidence in the employment of rock anchor foundations and experience of the type of rock suitable for their use.

The frequency of type testing shall, in the case of dispute, be reasonably determined by the Employer. The cost of rock anchor tests shall be included in the Scheduled Price of Hard rock foundation.

9.4 Training

Training shall be provided for up to six (6) design engineers at Contractor's premises, in batches, on the use of PLS-CADD, PLS-TOWER, i-TOWER, tower foundation design software (such as STAAD.Pro (Bentley Systems), SAFE (CSI), SAP2000 (CSI) & PLAXIS 3D), and Civil 3D, with a focus on practical application for designers certified trainers and/or internationally. The area of training and timing shall be mutually agreed during the implementation of the project and all associated costs shall be at contractors account except for the air fares (to and fro

Bhutan).

CHAPTER 6

FOUNDATIONS OF TOWERS

1.0 General

Where the design is not in the scope of the contractor, the provisions under this chapter would be limited only to the extent applicable. For this project, the tower and foundation designs will be furnished by the Employer, and accordingly, the design parameters under this chapter may not be applicable. However, all other relevant portions of this chapter would be applicable to ensure that the material, workmanship and other issues under the scope of work are not compromised.

All materials, design, detailing and construction methods for foundations shall be as per the latest revision of relevant Indian Standards except as set out and specified and/or assumed below. In case of incompatibility between Indian Standards and the Specifications herein, the more demanding parameters shall govern.

Reinforced Cement Concrete (RCC) type individual footings shall be preferred foundations for all towers, particularly in the mountains where transport of material is difficult. However, where the same is found to be uneconomical, individual Plain Cement Concrete (PCC) footings may be provided. Footings of all the legs of each tower shall be similar, irrespective of down-thrust and uplift. The Contractor shall submit the detailed designs and drawings for the foundations of all tower types under all soil conditions for the approval of the Employer.

2.0 Classification of Foundations

The following types of foundations for each tower shall be considered for the proposed works:

2.1 Normal Dry Soil(Hard Soil) Foundations

Used for locations in normal dry soil with Ground Water Table (GWT) below the founding level and soil is homogeneous up to the full depth of the foundation. Preferably RCC, otherwise PCC, slab and / or pyramid footing with the chimney to be adopted.

2.2 Wet-Type Foundations

To be used for locations where the water table is met at 1.5m or more below the ground line or at locations which are in surface water for long periods with water penetration not exceeding one meter below the ground line (i.e., paddy fields). Preferably RCC, otherwise PCC, slab and / or pyramid footing with the chimney to be adopted.

2.3 Partially Submerged Type

To be used at locations where subsoil water is met at a location between 1.5m and 0.75m below the ground line. Preferably RCC, otherwise PCC slab and / or pyramid footing with the chimney to be adopted.

2.4 Fully Submerged Type

To be used at locations where subsoil water is met at a location between 0.75m and the ground line. Preferably RCC, otherwise, PCC slab and / or pyramid footing with the chimney is to be adopted.

2.5 Soft / Fissured Rock

RCC-type undercutting may be used for the resistance of uplift in the case of RCC foundation for Soft Rock.

2.6 Hard Rock

RCC type, with Rock-Anchors if required, for the resistance of uplift.

2.7 Foundations for Tower Types SP and SSP

The heights and spans of these tower types shall be decided after the topographical survey and tower spotting are over. The foundations for these tower types shall be decided from amongst the other types listed here after completing the Geo-technical Survey. These foundations shall be paid based on measurements of actual quantities, as explained in the Price Schedule.

2.8 Special Foundations

In addition to the above, depending on the site conditions, other types of foundations may be introduced to meet the requirements of the site. Also, depending on the site conditions, the Employer will ask the Contractor to design and adopt footings for soil conditions Intermediate to those stipulated herein to affect more economy. The Employer will decide these by reviewing the results of the Geo-Technical investigation. When asked to do so, the Contractor shall submit a design to suit site conditions for the approval of the Employer. Examples of such intermediate conditions are Soils with the water table at another level than those assumed herein, particularly soft rock, soils with properties varying slightly than those assumed herein, etc.

The Contractor shall be responsible for ascertaining that the subsoil is suitable for the type of foundation used and shall provide details of site investigation and relevant tests carried out. The Contractor shall examine the soil investigation results and submit for the Employer's approval a schedule showing the type of foundation proposed at each support. The Employer's decision as to which type of foundation shall be employed at any given location shall be final. The Contractor shall be responsible for any subsidence or failure due, in the opinion of the Employer, to insufficient care having been taken in the preliminary examination of ground conditions. It shall be incumbent on the Contractor to employ adequately technically qualified Employers for the supervision/execution of foundations so as to ensure that the foundation type chosen is

satisfactory for the actual soil encountered near the tower legs, since the investigation shall be conducted slightly away from the tower leg, at the center of the tower. The Contractor shall be responsible for properly judging whether the soil encountered at the tower location has the same strength (or higher) as compared to the soil near the tower center, the investigation results of which have been considered in deciding the tower type. Any failure on this score of soil near the tower leg being weaker than that tested near the tower center shall be the Contractor's responsibility.

3.0 Loads on Foundations

The foundations shall be designed to withstand the reactions at the tower base along the stub angle slopes obtained from the structural stress analysis and increased by 10% as compared to the corresponding towers.

The base reactions shall be composed of the following: -

(a) Maximum tension or uplift
(b) Maximum compression or down-thrust
(c) Maximum horizontal shear or side-thrust

3.1 Stability Analysis

The following primary types of soil resistances shall be assumed to act in resisting the loads imposed on the footings on the earth:

(a) Resistance against Uplift:

The uplift loads will be assumed to be resisted by the weight of the earth in an inverted frustum of a conical pyramid of earth on the footing pad whose sides make an angle equal to the angle of repose of the earth with the vertical. The weight of concrete embedded in the earth and that above the ground will also be considered for resisting the uplift.

Every attempt shall be made to avoid over-lapping of frusta of adjacent footings. In an unavoidable case, where the frusta of earth pyramids of two adjoining legs superimpose each other, the earth frustum of each leg shall be assumed truncated by a vertical plane passing through the center line of the tower base.

The inverted frustum of the earth shall be assumed to be applicable in non-rocky conglomerates only. In rocky soil, other ways of considering uplift resistance, like rock anchors, embedment in rock etc., shall be devised with the approval of the Employer.

(b) Resistance against Down thrust:

The down thrust loads will be resisted by bearing the strength of the soil assumed to be acting on the total area of the bottom of the footings.
In the design of the foundation for down-thrust, the weight of concrete in the footing above and below ground level and embedded steel parts shall correctly be accounted for, giving due consideration to the water-table, if present, and displaced earth.

(c) Resistance against Side thrust:

Side thrust shall be resisted by passive pressure acting on the side of the chimney and/or by "at rest" soil pressure acting against the foundation slab and pyramid. If this pressure is inadequate to resist the side thrust, help shall be taken of the friction of the foundation against the ground. In case the passive pressure on the chimney face is less than the side thrust, the effect of the moment at the base of the foundation on the base pressure shall be taken into account in the stability check and subsequently in the design of the foundation. In all cases, the chimney shall be designed as a cantilever, fixed at the foundation top, subjected to the side thrust without any relief from the passive pressure. In the case of backfilling by Rocky Soils, horizontal soil pressures on the chimney and foundation shall be taken as zero.

In the case of Rocky soils, resistance against side thrust shall be developed by casting the footing against the rock.

(d) Resistance against Overturning:

For resisting overturning, the weight of soil shall be assumed to be 50% of the weight of the earth contained in the inverted frustum of the cone. The inverted frustum of the cone shall be the same as that considered for resisting uplift, as given above. The specification provides for the method for calculating the resistance against overturning. It also gives the formula for calculating the volume of soil contained in the inverted frustum of the cone. The following shall be considered during the stability analysis.

i. The increase in ground reaction caused by a moment due to horizontal shear.
ii. The reduction of uplift capacity caused by a moment due to horizontal shear.

The strength design shall ensure safety against all stress resultants (viz. shear, bending and axial stresses) during each of the maximum down thrust and uplift conditions along with accompanying side thrusts, as per the standard civil Engineering practices. Particularly, the base slab shall be checked for stresses due to bending moment and shear force arising during down thrust and uplift conditions, while the chimney portion shall be designed as a composite section for combined action of compression or tension force and associated bending moments due to horizontal shears. The anchoring of stub and cleat shall be done to check anchoring stress in down thrust and uplift cases.

3.2 Properties of Soil & Concrete

For bid purposes, the design of foundations shall follow the assumptions set out in the table given below.

	Units	Hard Soil (Normal Dry Type)	Hard Soil Wet Type **	Soft Rock	Hard Rock	Partially Submerged **
Assumed Mass of Earth for Foundations *	kg/m³	1500-Min 1800-Max	900-Min 1100-Max	1600-Min 1900-Max	1600-Min 1900-Max	900-Min 1100-Max
Assumed Mass of Rocks for foundations.				1900	2200	
Assumed Mass of Concrete in RCC for Foundations	kg/m³	2400-Min 2600-Max	1400-Min 1600-Max	2400-Min 2600-Max	2400-Min 2600-Max	1400-Min 1600-Max
Assumed Mass of Concrete in PCC for Foundations	kg/m³	2300-Min 2500-Max	1300-Min 1500-Max	2300-Min 2500-Max	2300-Min 2500-Max	1300-Min 1500-Max
Assumed Ultimate Bearing Capacity for Foundations Under Specified Maximum Ultimate Loading.	t/ m²	25	12	50	100	12
Ultimate Shear Stress in Rock.				3.0	7.5	
Assumed Angle to vertical of Frustum of Earth Resisting Uplift (Angle of Repose).	-	30º	15º	-	-	15°
Ultimate Plain Concrete Bearing Stress	Kg/cm²	60	60	60	60	60
Ultimate Adhesion Value between Galvanized Steel and Concrete.	kg/cm²	10.0	10.0	10.0	10.0	10.0
Minimum Portion of Stub Loads to be considered in the Design of Cleats		50%	50%	50%	100%	50%

*Weight of water not included.
** Properties applicable to submerged parts only.

The soil parameters given above shall further be confirmed/modified as per the findings of geotechnical investigations to be carried out by the Contractor as specified after the award of the contract.

3.3 Foundation Depth

For all soils other than Hard Rock, the total depth of foundations below the ground level shall not be less than 1.5 m. The corresponding minimum depth for Hard Rock foundations shall be 0.6m.

The maximum depth of foundations for all types of towers (except special structures and foundations approved by the Employer), shall not be more than 3.5 m below the ground level.

3.4 Design of Foundation

The foundation shall be designed to satisfy all specified loading conditions.

The thickness of concrete in the chimney portion of the tower footing shall provide a minimum cover of not less than 100 mm from any part of the stub angle to the nearest outer surface of the concrete at all dry locations. The minimum section of the chimney shall be 300 mm square. At all wet locations, the chimney shall have a clearance of 150 mm from any part of the stub angle and a minimum of 450 mm square section.

The chimney top or muffling must be at least 300 mm above ground level, and also the coping shall be extended up to the lowermost joint level between the bottom lattices and the main corner leg of the tower. At least a 50 mm thick lean concrete pad of 1:3:6 nominal mix of the size of the base of the footing will be provided below all foundations. This slab will also be provided in cases where pyramids are provided over concrete slabs, as in the case of submerged-type foundations referred to below. No separate charges shall be paid for this lean concrete pad.

In the case of a submerged type of foundation, at least one base slab, not less than 200 mm, shall be provided. The slab shall be of M20 cement concrete.

The minimum distance between the lowest edge of the stub angle and the bottom surface of the concrete footing shall not be less than 100 mm or more than 150 mm in the case of dry locations and not less than 150 mm or more than 200 mm in the case of wet locations.

The foundation shall be so designed that the Center of Gravity (C.G.) of the tower leg coincides with the C.G. of the chimney & C.G. of the chimney coincides with the C.G. of the base pyramid or slab, whichever is provided. In case this provision is not followed, the resultant eccentricities and additional forces because of eccentricities shall be considered in the design of foundations.

The portion of the stub in the pyramid shall be designed to take full down thrust or uplift loads by the cleats combined with the bond between the stub angle and concrete in the pyramid portion.

(i) Concrete Block (PCC) Type Foundation:

The slope of all concrete pyramid side faces shall not be less than 45° to the horizontal. The chimney shall be designed as a cantilever, as specified herein, with reinforcement provided in the form of bars at the corners of the chimney, tied by means of stirrups. The detailing of the reinforcement shall be as per the applicable clauses specified for the chimney in RCC Type Foundation below.

(ii) RCC Type Foundation:

The RCC foundations shall be designed in accordance with the Limit State Method prescribed in IS 456 – 1978 employing the same properties of materials, permissible stresses and mode of design as specified therein. The following points shall be taken care of while designing the RCC foundations:

a) The foundation shall not be permitted in pyramid form. Instead, steps of square slabs, each not less than 200 mm thick, shall be adopted. The thickness of the bottom slab in touch with the layer of PCC in blinding shall not be less than 300 mm. The sides of all the slabs shall be vertical only.

b) The reinforcement bars in each step of the upper tier of footing shall be bent 90° near the edge of the step (keeping the minimum cover required) and brought to the bottom of the footing, keeping the minimum cover.

c) The bars in the bottom and upper tiers of footing shall be continuous from one end to the other end. Curtailment of the bars in between is not permitted.

d) The chimney portion shall be designed as a composite section for the combined action of compression or tension force and associated bending moments due to horizontal shear. A minimum of four bars of diameter not less than 12mm shall be provided running throughout the chimney portion to the bottom of the footing and bent there at 90^0 in the bottom tier of footing, keeping the minimum cover required.

e) Only one quality of reinforcement bars shall be used for various footings of one type of tower. However, the size of reinforcement bars used may be different to the extent as below: -

- One size for the base (bottom tier)
- One size for each tier.
- One size for chimney vertical bars.
- One size for chimney stirrups.

For one type of tower, only one combination shall be used. The minimum concrete cover provided shall not be less than 50mm clear in any case.

In no case splicing (horizontal & vertical bars) shall be permitted in foundations.

f) The footings shall be cast monolithically and designed as rectangular or T-beam, as the case may be depending upon the shape of the section being considered.

(iii) Soft Rock Type Foundation:

This type of foundation shall be suitable for locations where soft rock occurs for more than the bottom 50% of the hard soil (normal dry type) foundation depth. Soft rock is defined as a homogeneous weathered rock or a hard rock which has been fissured and stratified or decomposed rock. Generally, this type of rock gives a dull sound when struck with a pickaxe or bar or flakes on exposure to air or water. These rocks can be excavated using normal tools without drilling or blasting. However, before the classification of the material as soft rock, the Contractor shall demonstrate to the satisfaction of the Employer its properties, fabric and compactness.

The size of the excavation shall be no larger than that of the hard soil foundation and shall be undercut at the base.

In the design of soft rock foundations, the following parameters shall be adopted.

(a) The depth of the excavation in soft rock shall be at least half the full depth of the excavation required for a good soil foundation.

(b) The base of the excavation shall be undercut into the soft rock by at least 250 mm all around at an angle between 45° and 60° to the horizontal. The thickness of the slab at the edge will be at least 150 mm.

(c) Uplift resistance may be assumed to comprise:

- The ultimate shear stress in the soft rock applying over the surface area derived from the perimeter of the undercut in plan and the thickness of soft rock in elevation.

- Above the rock surface, the weight of a frustum of the earth has the same plan area at its base as the undercut. The allowance shall be made for loss of uplift resistance due to overlap of frusta where applicable.

- an allowance for the weight of the foundation.

Resistance against sliding shall be generated by casting the foundation against the rock surface, for which the excavation shall be the exact size of the foundation. No payments shall be made for oversize excavation.

Other constructional details shall be as for Concrete Block Foundations.

(iv) Hard Rock Type Foundations:

Hard Rock means a natural aggregate of mineral crystals occurring in large continuous masses which cannot be removed/excavated except by blasting or drilling with mechanical breakers. Material shall not be classified as a rock unless the Contractor demonstrates its continuity and soundness to the satisfaction of the Employer.

Where foundations are installed in rock, the stub leg shall be set at a minimum depth of 0.9 m into a concrete block, and sufficient stub cleats are used to ensure full transfer of load within the foundation. The upper part of the stubs shall be encased in concrete to a height of 225mm above ground level. To ensure adequate uplift resistance, a sufficient number of reinforcing bars shall be grouted into the rock, using an expanding grout, for a minimum depth of 1.2 m from the base of the excavation. The diameter shall not be less than 12mm. The grouting hole shall normally be 20mm greater than the diameter of the bar. The reinforcing bars shall have an adequate bond length within the concrete block. Other constructional details like the design of the chimney etc., shall be as given in the Concrete Block type foundation.

Resistance against sliding shall be generated by casting the foundation against the rock surface, for which excavation shall be the exact size of the foundation. No payments shall be made for oversize excavation. Such foundations shall be approved by the Employer before the erection of the support or stub legs proceeds. Type testing of rock anchor bars shall be carried out as specified in the clauses on “Inspection and Testing”.

4.0 Construction of Tower Foundation & Stub Setting

4.1 Excavation

Except as specifically otherwise provided, all excavation for footings shall be made as per the approved design of the foundation. Contract Rates for all footing sets shall be inclusive of all excavation-related costs. In case of variation of sizes of footings and for Special Foundations, if required, the following shall be considered as the governing Specifications. It shall be deemed to have been considered in the quoted rates. The excavation walls shall be vertical, and the pit dimensions shall be such as to allow a clearance of not more than 150mm on all sides from the foundation pad except for foundations in soft and hard rock. In soft rock and hard rock foundations, excavation paid for will be of the exact size of the foundation, with undercut being paid for extra as per its volume. The rate for undercut shall be as per Schedule Rate for normal excavation. All excavation shall be protected so as to maintain a clean subgrade until the footing is placed, using timbering, shoring or casing, if necessary. Any sand, mud, silt or other undesirable materials that may have accumulated in the excavation shall be removed by the Contractor before placing concrete.

The Contractor shall ensure that excavations are made to the correct depth and width. If excavations are taken too deep, the excess depth shall be backfilled with the same concrete grade of foundation at the Contractor's expense. If excavations are made too wide, such modifications to the design as the Employer may require shall be made at the Contractor's expense.

The soil to be excavated for tower foundations shall be classified as under:

Non-Rocky Soil: Soil consisting of silt, gravel etc., generally removable by means of ordinary pickaxes and shovels. This shall also include Wet Soil, wet soil being the soil where the subsoil water table is encountered within the range of foundation depth. The soil below the water table and submerged soil at locations where pumping or bailing out of water is required due to the presence of surface water will be treated as wet soil. Locations where pumping or bailing out of water is required are likely to be few in number, but the unit rate for excavation in this type of soil shall include pumping of water.

Rocky Soil

Soft Rocks: This will mean a homogenous weathered rock or a hard rock which has been fissured and stratified, or a decomposed rock. Soft Rock will generally be removable by pickaxes and shovels and not require chiseling or drilling, and blasting.

Hard Rocks: Hard rocks will be those which require chiseling or drilling and blasting. The cost of drilling and blasting are included in the quoted rates, as per the guidelines of the following clause.

For excavation in rock, the methods preferred will be chiseling, and drilling, particularly with hydraulic machines. Blasting may be permitted, depending on the situation and arrangement with governmental authorities at the time of construction. In that case, the Contractor shall request the employer for approval to procure the requisite blasting material and shall be responsible for the purchase, transport and storage and use of the blasting material.

Hard rock materials shall be staked at site for measurement. No extra charges shall be admissible for the removal of the fallen earth in the pit, when once excavated.

When rock is encountered, the holes for tower footings shall preferably be drilled, but where blasting is to be resorted to as an economy measure (after obtaining the Employer's approval), it shall be done with the utmost care to minimize the use of concrete for filling up the blasted area. All necessary precautions for handling and use of blasting materials shall be taken. In the case where unnecessarily large quantities are excavated/blasted, resulting in the placement of large volumes of concrete, payment of concrete shall be limited to calculated design volume, the balance cost of concrete and excavation being to the Contractor's account. In the case where drilling is done, the stubs may be shortened suitably with the approval of the Employer.

Shoring pits with shuttering will be admissible when the soil condition is so bad that there is a likelihood of an accident due to the falling of the surrounding earth. However, the Employer shall decide the location where the shoring of pits with shuttering is to be

carried out. Oversize excavation on account of shoring shall not be counted as additional excavation.

Benching, wherever required by the Employer, shall be deemed to be included in the quoted rates of foundations unless specifically provided as a separate item in the Price Schedule.

Benching:

When the line passes through hilly/undulated terrain, leveling the ground may be required for casting tower footings. All such activities shall be termed benching and shall include cutting excess earth and removing the same to a suitable point of disposal as required by Employer. Benching shall be resorted to only after approval from Employer. The maximum offset for benching is 1.5m, however the volume of the earth to be cut shall be measured before cutting and approved by Employer for payment purposes. Further, to minimize benching, unequal leg extensions shall be considered and provided if found economical. The proposal shall be submitted by the Contractor with detailed justification to the Employer.

Unit Rates and Measurement for Foundation:

The indicative shape of foundations is enclosed in this Specification. The bidder is required to quote the unit rates for different foundation activities namely, excavation for different types of soils, concreting, supply and placement of reinforcement steel and stub setting in the Schedule of Price.

The unit rates of excavation for each type of soil shall include excavation along with all associated activities like shoring, shuttering, dewatering till completion of foundation work stock piling, dressing, back filling of foundations after concreting with excavated/borrowed earth (irrespective of lead) and consolidation of earth, carriage of surplus earth to the suitable point of disposal as required by the Employer or any other activity required for to completion of foundation work in all respect. The measurement for excavation shall be made on the basis of design excavation volume arrived at considering dimension of pit leaving 150mm gap around (except for undercut foundations) the base pad and the unit rate of this item as indicated in Letter of Award. The payment for excavation shall be made as per actual type of soil encountered at the time of excavation, but the total payment for excavation portion shall not exceed the amount as payable for excavation considering the soil type same as that of foundation classification. The decision of the Employer shall be final and binding with respect to the classification of soil and foundations. In case of hard rock payment, 15% deduction will be made for void from cage/stack measurements.

Form boxes shall be used for casting of foundations. The unit rate of concreting shall include the cost of supply, fabrication and placement of form boxes, cement, water, coarse and fine aggregates mixing and placing of concrete, curing of concrete and any other activities related / required for completion of concreting works of foundation. The payment for this item shall be made as per the actual volumes of concrete completed but limited to design volume based on unit rates indicated in the letter of award.

4.2 Setting of stubs.

The stub shall be set correctly in accordance with the approved method at the exact location and alignment and in precisely correct levels. Approved stub setting templates shall be used for the proper setting of stubs. Stubs shall be set in the presence of the Employer's representative available at the site, for which adequate intimation shall be given to the Employer by the Contractor.

The Employer's representatives shall approve the setting up of stubs at each location. The approval shall not, however, absolve the Contractor of his responsibility of correct setting of stubs and casting of foundations, who will be required to rectify the faulty work at his own expense.
The Employer reserves the right to uncover the foundations subject to a total maximum of 25% locations, and if any foundation is found faulty, the Contractor shall be required to uncover all foundations within 1.5 km on either side of the faulty foundation and bear all the expenses thereof as well as the expenses of rectifying all inadequate or faulty foundations thereby disclosed and putting all these back in order.

The tolerance limits for adjacent stubs shall be within 5mm vertically, for diagonal stubs within 10mm vertically, and stub slope is limited to 5mm/m or less.

Commented [1]: As our drawing is not specifying the tolerance limit , do you need to add this as per the JICA suggestion ?

4.3 Concrete

All cement to be used shall be Portland cement meeting the requirements of the relevant Indian Standards (mainly IS 269 – 1989) from an approved manufacturer. Cement shall be adequately protected from moisture or contamination during transportation and storage at the site. Cement in bags shall be limited to within a heap of 13 bags in store and 7 bags at the site. No cement containing lumps or deleterious matter shall be used.

The concrete used for the foundation shall be of M20 grade (i.e., of 20 N/mm^2 cube compression strength at the end of 28 days), with 20 mm downgraded stone metal for the chimney portion and slab portion and 40 mm downgraded stone metal for the pyramid portions. Aggregates shall conform to Specifications for coarse and fine aggregates from natural sources for concrete as per IS: 383 – 1970. The methods used for the preparation of concrete and all its properties regarding its strength under compression, tension, shears, punching and bending etc., as well as workmanship, shall conform to the relevant Indian Standard codes of practice.

The sand used for the concrete shall be composed of hard siliceous materials. It shall be clean and of a sharp angular grit type and free from earthy or organic matter and deleterious salts and screened through a mesh not more than 5mm in the clear.

The aggregates shall be of clean broken hard granite or other stone specified or approved by the Employer. It shall be of hard, closed-grained quality. It shall also be as far as possible cube-like, preferably angular, but not flaky, perfectly clean and free from earth, organic or other deleterious matters. 40 mm aggregate shall be of a size as will pass through a mesh of 40 mm measured in the clear and 20 mm aggregate through 20 mm square mesh measured in clear. All fine and coarse aggregates shall be obtained from sources approved by the Employer.

The water used for mixing concrete shall be fresh, clean and free from oil, acid and alkali organic materials or other deleterious substances. Salty or brackish water should not be used. Potable water is generally satisfactory.

Though not generally expected, sulphate-resisting cement may be necessary in certain areas of the line route, and the cost of this shall be deemed to have been included in the rates entered in the Schedule of Rates for concrete and foundation items. Sulphate-resisting Portland cement shall be in accordance with IS standards and shall be obtained from a source approved by the Employer. The Employer shall decide the locations where it shall be mandatory for the Contractor to use sulphate-resisting cement. The Contractor shall certify that the proposed cement is of the required quality regarding resistance to corrosion due to sulphates. Methods of testing this quality shall be deemed to have been included in the rates quoted. The use of aluminous cement will not be permitted.

4.4 Batching & Mixing of Concrete

It shall be the Contractor's responsibility to carry out tests on samples for the concrete mixture design that the Contractor proposes to employ in foundation concrete. The procedure for testing is outlined in the appropriate clauses under "Inspection and Testing". The test result of the proposed mixture, together with data for water-cement ratio and slump, shall be submitted to the Employer for approval at least four (4) weeks before the commencement of concreting operation. The trial mix proportions shall be approved if the average compressive strength of a set of 9 specimens tested at 28 days exceeds 21 N/mm^2, with not more than 3 specimens being less than 20 N/mm^2 and no single specimen being less than 17 N/mm^2.

The Contractor shall be responsible for maintaining the mixture, control and testing of concrete throughout the working period. Neither the mixed proportions nor the source of the supply of materials shall be altered without the prior approval of the Employer.

The minimum cement content, the water-cement ratio, the slump and all other characteristics of concrete shall be demonstrated to conform to the relevant Indian Standards.

The concrete shall be mixed with an approved concrete mixer. In no case shall hand mixing be allowed. The Contractor shall provide the measuring equipment and shall maintain and operate the equipment as required to accurately determine and control the amount of each separate ingredient entering the concrete. The equipment shall be constantly maintained in first-class workable condition during the working period. The concrete mixer shall be cleaned and inspected at suitable intervals in the presence of the Employer.

Each time the work stops, the mixer shall be cleaned out, and while recommended, the first batch shall have 10% additional cement to allow for sticking in the drum.

The cost of all concrete testing shall be deemed to be included in the price of each foundation. In addition, the Employer shall retain the right to undertake slump tests at

any time prior to the placement of concrete and reject any batch of concrete that fails such tests, all at the cost of the Contractor.

In a difficult location, where it is impossible to transport the concrete mixer, the Employer may allow hand mixing of concrete. In such cases, 10% additional cement shall be used over and above that being used for such a foundation where the mixer is being used. Additional costs in such cases shall be borne by the Contractor.

Mixing shall be continued until there is a uniform distribution of material and the mix is uniform in colour and consistency, but in no case, the mixing is done for less than 2 minutes. Normally mixing shall be done close to the foundation, but in case it is not possible, the concrete may be mixed at the nearest convenient place. The concrete shall be transported from the place of mixing to the place of final deposit as rapidly as practicable by methods (transit mixers) which shall prevent the segregation or loss of any ingredient. The concrete shall be placed and compacted before the setting commences.

The concrete should be mixed as stiffly as the requirement of placing the concrete in the forms or moulds with ease and the degree to which the concrete resists segregation. Hence the quantity of water used should not be too much.

In the event that the Contractor proposes to use ready mixed concrete for foundation work, approval must first be obtained from the Employer, who will inspect the batching plant and sand, cement and broken stone used in the making of concrete at work. No ready-mixed concrete shall be permitted in foundation work if it has been mixed in a transit mixer more than 45 minutes prior to placing. At the discretion of the Employer, ready-mixed concrete may be permitted where the transport journey exceeds forty-five (45) minutes, provided that cement is introduced into the drum at the Site and the concrete is thoroughly mixed prior to placing. Alternatively, and at the discretion of the Employer, where the transit mixer is equipped with its own water tank, water may be added to the cement and aggregate during the journey, provided that mixing does not exceed forty-five (45) minutes prior to placing. The Employer's decision to reject any of the above methods of supplying ready mixed concrete shall be final.

Concrete shall not be directly poured from a height of more than 1.5 m to avoid mix segregation.

Proper forms or moulds should be adequately braced to retain proper shape, while concreting should be used for chimneys and pyramid or slab portions. The mould should be watertight so that cement cream should not come out, leaving only sand and jelly, consequently forming honeycombing in the concrete. The form boxes shall be cleaned and oiled before these are used for concrete.

The stub angle shall be free of rust and cleaned thoroughly and painted with cement paste made of 1 part of cement and ¾ part of water (cement slurry) to a thickness of 1.6 mm before the concrete is laid against the stub angle. The painting with cement slurry shall be done each time to such a height before the cement wash becomes dry. Concrete shall, in all cases, be placed in the presence of the Employer. No concrete shall be placed until the Employer has approved the excavated surface, stub setting, an inspection of formwork and completion of all preparation work. Adequate chutes or

other approved methods shall be employed to place concrete. All concrete shall be consolidated to the maximum practicable density with a concrete vibrator and make the surface smooth and free from pockets and honeycomb.To prevent concrete segregation, it is restricted to about 30 seconds per point.

Commented [2]: Added as per JICA

The concrete shall be laid in 150 mm layers and consolidated well so that the cement cream works up to the top and no honeycombing is left in the concrete. Concreting is to be done continuously so that the subsequent layers are laid before the final set of the bottom layer begins.

If fresh concrete is to be laid on old concrete less than a week old, the surface of the old set concrete should be chipped and cleaned thoroughly with a wire brush and washed with a layer of thick cement slurry before the new concrete is laid. If, however, the concrete is more than ten days old, the top layer of the set concrete should be chipped and cleaned thoroughly with a wire brush and water, and a layer of cement mortar (1:2) 12 mm thick shall be laid evenly after giving a coat of cement slurry, as specified above to ensure proper bonding between old and new concrete. If a foundation is damaged after stringing, it shall be brought to the notice of the Employer and rectified as directed by him.

After concreting the chimney portion to the required height, the top surface should be finished smoothly, with a slight slope towards the outer edge to drain off the rainwater falling on the coping.

In wet locations, the site must be kept completely de-watered both during the placing of the concrete and for 24 hours after completion. There should be no disturbance of concrete by water during this period.

The forms or mould shall not be removed before a lapse of about 24 hours after the completion of concreting. After removal of the forms, the concrete surface, where required, shall be repaired with a rich cement and sand mortar in the shortest possible time.

For concreting during hot weather, adequate provision shall be made to lower concrete temperature, which shall not increase beyond 40°C at the time of placement of fresh concrete.

For concreting during the extreme cold weather, when the ambient temperature is below the low temperature, concrete covering and heating shall be performed to maintain temperature and ensure concrete quality. Further, hardening admixture can be used at site by the conductor at their cost with prior approval from the employer.

Commented [3]: Added as it was missing. Do we need this ?

After stringing is over, all exposed concrete and tower steel within one meter of the ground or high-water level, whichever is higher, shall be painted with black bituminous paint, Flintcote or approved type.

4.5 Reinforcement

All materials, activities and methods regarding reinforcing steel shall conform to the relevant IS Codes, particularly to IS 432 – 1982 for mild steel bars and wires, IS 1786

– 1985 for High Strength bars and wires and IS 1566 – 1982 for steel wire fabric. The reinforcement steel shall be Fe 500 (= 500 N/mm^2). The Contractor shall provide certificates stating the origin and process of manufacture of reinforcing steel and submit test certificates from the supplier to the Employer. At the discretion of the Employer, samples of reinforcing steel selected by the Employer shall be tested by the Contractor at a local laboratory of the Employer's choice to demonstrate the tensile strength of the steel. The cost of such testing shall be deemed to be included in the Scheduled Rates of Items for supply of reinforcement, and the unit rate of foundation.

The wire shall be 1.25 mm in diameter or heavier black annealed iron wire. Preformed clips or attachments shall be of proper design and strength so that reinforcing bars are rigidly supported/held in position and are not capable of movement during concrete pouring.

Reinforcing steel shall be protected from damage during transportation and during storage. It shall be stacked horizontally with adequate support to prevent distortion. Bars of different lengths and diameters shall be stacked separately and marked for easy identification.

Reinforcing steel shall be cold bent without any application of heat by a slow and regular movement. Bending shall be done accurately to dimensions given in the bar bending schedule or foundation drawings in accordance with IS 2502 – 1963.
Bars having cracks or splits on the bends shall be rejected.

Immediately before placing concrete, it shall be ensured that reinforcing steel is free from dirt, detrimental scale, paint, mortar, oil, or other foreign substances.

Reinforcing steel embedded or partially embedded in the concrete shall remain completely undisturbed for a minimum period of 24 hours, or longer if the Employer so directs, after a unit of concrete placement has been completed.

The steel shall be placed accurately in accordance with the Drawings. It shall be tied securely at each intersection. Metal or concrete chairs and metal spreaders of approved types shall be used where necessary for the support or spacing of steel bars.

Wood supports, or spreaders shall not be used.

Splicing/lapping of bars shall not be permitted.

Engineers must perform rebar inspections after the foundation rebar has been placed to confirm the bar size, quantity, condition of the rebar processing, concrete cover thickness, presence of any rust, and the condition of formwork fastening, ensuring compliance with the approved foundation drawings.

Commented [4]: Add as per JICA

The unit rate of 'Reinforcement Steel' shall include supply and placement of reinforcement steel, stirrups, wire for binding the reinforcement, chairs, bolsters and spacers etc. as required to complete the foundation work. The payment of reinforcement steel shall be made based on the working drawing corrected to 2nd decimal. Wastage, spacer bars, chairs, stays, hangers and annealed steel wire shall not be measured for the

payment and the cost of these items shall be deemed to be included in the rates for reinforcement.

4.6 Backfilling and Removal of Stub Templates

Following the opening of formwork and removal of shoring and shuttering, backfilling shall be started only after repairs, if any, to the foundation concrete and after the approval of the Employer. The backfilling and grading shall be carried up to an elevation of about 75 mm above the finishing ground level to drain out water. After backfilling, a 50 mm high earthen embankment will be made along the sides of excavation pits, and sufficient water will be poured into the back-filled earth for at least ten days.

The fill materials will be subject to the Employer's approval. To the extent available, the selected surplus soils from excavated materials shall be used as backfill. Fill material shall be free from clods of earth, salts, sulphates, organic or other foreign materials. All earth clods shall be broken or removed. Where excavated material is mostly rocks, the boulders shall be broken into pieces not larger than 150 mm in size, mixed with properly graded fine material consisting of the earth to fill up the voids and the mixture used for filling. If any selected fill material is required to be borrowed, the Contractor shall make arrangements for bringing such material from outside borrow pits at his cost. The material, as well as the source, shall be subject to prior approval of the Employer. The approved borrow area shall be cleared of all bushes, roots of trees, plants, rubbish, etc. Topsoil containing salts/sulphates and other foreign material shall be removed. The material so removed shall be burnt or disposed off as directed by the Employer. The contractor shall make the necessary access road to borrow the area and maintain the same, if such access road does not exist, at his cost.

4.7 Compaction of Backfill

As soon as the work of foundations has been accepted and measured, the space around the foundation shall be cleared of all debris and filled with earth in layers not exceeding 15 cm, each layer being watered, rammed and properly consolidated before the succeeding layer is laid. Each layer of the earth shall be consolidated by ramming with approved mechanical compaction machines. Special care shall be taken to prevent any wedging action against the footing. The backfill shall be compacted to 95% of the maximum dry density obtainable in the standard Procter density test as specified in relevant standards. The excavation and placing operations shall be such that the material, when compacted, will be blended sufficiently to secure a best practicable degree of compaction, impermeability and stability. The stub setting template shall be opened only after the completion of backfilling.

4.8 Curing

The concrete, after it is 24 hours old, shall be cured by keeping the concrete wet continuously for a period of 10 days after laying. The pit may be backfilled with selected earth sprinkled with the necessary amount of water and well consolidated in layers not exceeding 150 mm of consolidated thickness after a minimum period of 24 hours, and thereafter both the back-filled earth and chimney top shall be kept wet for the remainder of the prescribed period of 10 days. The uncovered concrete chimney above the back-filled earth shall be kept wet by providing empty cloth or hessian bags

dipped in the water fully wrapped around the concrete chimney for curing and ensuring that the bags are kept wet by frequently pouring water on them.

4.9 Revetment

At locations, for instance, on slopes, where there are chances of soil erosion due to rainwater, a retaining wall shall be provided around the tower foundation as a revetment. The wall shall consist of broken stone pieces cemented with the help of 1: 5 cement mortar and weep holes and filters. The revetment walls shall be finally pointed with 1:4 cement mortar. The earth shall fill the empty space between revetment and foundation. Alternatively, RCC retaining walls, based on standard civil engineering practices, shall also be permitted. The design of the revetment and foundation shall be developed by the Contractor and approved by the Employer.

For some of the locations in nalas, river bed or undulated terrain etc.. gabion wall stone bound in G.I mesh 4mm (8SWG) are to be provided after the approved from Employer. Measurement shall be taken in cubic meters, and 15% deduction will be made for void from cage/stack measurements.

Open Surface Drain should be constructed as per the drawing around the towers (3 sides) with proper slope based on the site condition so that the locations are free of stagnant water.

Note:
RCC or Masonry works other than foundations, e.g. protection works like retaining walls, caissons, well-foundations etc., are not much expected to be encountered at this point in time. Nevertheless, if these are found necessary at the time of execution of the Contract, the same shall be decided upon by the Employer. In that case, the unit rates quoted by the Contractor for items required for such works (e.g. the rates for excavation, concrete, reinforcing steel etc.) shall remain binding after seeking the approval from the employer. For dry stone and stone masonry revetment, separate rates shall be quoted per cum. of the wall. These rates shall be inclusive of the supply of all materials, items of work involved (like excavation, laying etc.), and all costs of workmanship, labour, etc., necessary to complete revetment works.

No extra payment shall be made for allied works such as excavation for revetment, packed stone at head of weep holes etc. However, no deduction shall be made for the volume enclosed by weep holes.

Bio-engineering based Protection Measures:

Bioengineering measures can be effective in reducing the vulnerability of transmission lines towers to natural hazards which also provides ecological benefits. Grasses with long roots readily available in the vicinity of the tower locations or as instructed by the employer shall be planted in rows or as instructed by the employer.

Crib walls should be constructed with timer to catch the moving debris as per the approved drawing. The height of the crib walls in any case shall not exceed: Light crib = 1.50 metres and Heavy crib = 5.00 m. Excavation shall be done as per the requirement. Lay the timber section in the trench at right angles to the line of the trench.

Lay two long sections of timber on top of the short sections, running parallel to the line of the trench. Fix the long sections with nails/reinforcement bar 16 mm dia, 800 mm long for heavy crib wall and 12 mm dia. 250mm long for light crib wall on each cross. Back fill and compact excavated debris up to the top of the long sections. Repeat the procedure until the required height is obtained. Step each layer in to the slope, so that the face of the wall is at an angle of 45º to 60º from horizontal. Backfill above the wall with additional suitable material at 35º to meet the slope as high up as possible. Carry out bioengineering works in the front and at the top.

4.10 De-watering

The contractor shall furnish all materials and equipment and perform all work required for de-watering the footing excavation as required to enable the construction of the concrete footings. During the placing of concrete for the footings, the water level in the excavation shall be kept below the surface of the excavation.

There shall not be any separate item for de-watering in the Schedule of Rates. It shall be assumed that the quoted rate for any item that could require de-watering (e.g., concrete for footings, special works like revetment or excavation for any other purpose etc.) is inclusive of de-watering. Further, the de-watering included in the scheduled rate of the main item shall be inclusive of de-watering equipment, its transport and installation at the site, and all operational costs like skilled and unskilled manpower, fuel, maintenance charges, etc.

Note:

Locations requiring de-watering are expected to be few locations. Nevertheless the Contractor should follow the above Specifications as and when de-watering is required.

CHAPTER 7a

ACCC CONDUCTOR

This specification covers design, engineering, manufacture, assembly, stage testing, inspection and testing before supply and delivery at site of ACSR WOLF conductor equivalent Aluminium Conductor Composite Core (ACCC) conductor along with its associated Hardware Fittings & Accessories for construction of 66kV D/C Transmission Lines from Semtokha to Dechencholing.

It is not the intent to specify completely herein all details of the design and construction of conductor. However, the conductor shall conform in all respects to high standards of engineering, design and workmanship and shall be capable of performing in continuous commercial operation. The Purchaser, who will interpret the meanings of drawings and specification, shall have the power to reject any work or material which in his judgment is not in accordance therewith. The material offered shall be complete with all components necessary for its effective and trouble-free operation. Such components shall be deemed to be within the scope of Bidder's supply only, irrespective of whether these are specifically mentioned in his specification and/or the commercial order or not.

One of the circuits shall be ACCC Conductor strung on the new 66 kV double circuit transmission tower in mountainous terrai***n. The ACCC Conductor shall have the same overall diameter and total mass as that of the ACSR wolf conductor,*** meeting sag coordination so as to achieve the ground clearances without making modifications of the predesigned towers and foundations as far as possible.

The maximum designed temperature of the conductor shall be 175°C. The maximum conductor sag at designed maximum temperature of the ACCC conductor and no wind corresponding to 50 Hz, at 66 kV under ambient conditions will be such that the statutory ground clearance will be maintained throughout the route keeping (erection) tension at 25% of UTS of conductor.

The conductor shall be suitable for continuous operation at a designed maximum temperature. The bidder shall indicate the maximum permissible conductor temperature for continuous operation without any deterioration of its electrical, mechanical & metallurgical properties in GTP. The maximum permissible conductor temperature for short-term operations including permissible duration of such short-term operation shall also be furnished by the bidder in the GTP.

Current Carrying Capacity / Ampacity Requirements

The ACCC Conductors shall be suitable to carry the thermal ampacity at specified maximum conductor temperature of 50 Hz, at 66 kV under the ambient conditions &

maximum conductor sag specified in sag tension (to be provided to successful bidder) while satisfying other specified technical requirements/ parameters. The calculations for Ampacity/Temperature shall be based on the latest IEEE Standard 738.

Sag-Tension Requirements

The use of Wolf-equivalent ACCC conductor on double-circuit towers, where one circuit is strung with conventional ACSR Wolf and the other with ACCC Wolf-equivalent, shall be governed by the requirement to ensure both mechanical and electrical compatibility between the two circuits. The ACCC conductor selected must be Wolf-equivalent in terms of cross-sectional area, diameter, and weight so that tower loading remains balanced and within design limits. Sag–tension calculations shall be carried out for both circuits at their respective maximum operating temperatures (ACSR Wolf at 75°C and ACCC Wolf-equivalent at 175°C), with erection tension limit as per sag tension furnished by the Employer. The maximum sag shall be such that statutory ground clearance is maintained throughout the route. ACCC conductors exhibit lower thermal sag at high temperatures, tower design and stringing charts shall account for potential unequal vertical loading between circuits, ensuring balanced performance under ambient, no-wind, and wind conditions. All insulator strings, clamps, joints, and accessories shall be compatible with the ACCC composite core while mechanically equivalent to those used for ACSR Wolf. Type test reports and comparative sag–tension charts shall be submitted to demonstrate compliance and to verify that tower loading and electrical performance remain within acceptable limits.

The ACCC conductor shall conform to the sag and tension requirements corresponding to the pre-established design parameters of ACSR Wolf.

Hardware & accessories should be compatible with the supplied ACCC Conductor.

Workmanship

I. All the conductor strands shall be smooth, uniform and free from all imperfections, such as spills and splits, cracks, die marks, scratches, abrasions, rust etc.

II. The finished conductor shall be smooth, compact, uniform and free from all imperfections including kinks (protrusion of wires), wire cross over, over riding, looseness (wire being dislocated by finger/ hand pressure and / or unusual bangle noise on tapping), material inclusions, white rust, powder formation or black spot (on account of reaction with trapped rain water etc), dirt, grit etc.

Joints in wires

I. Aluminum OR Aluminum Alloy Wires

During stranding no Aluminum/ aluminum Alloy welds/joint shall be made for the purpose of achieving the required conductor length.

No joints shall be permitted in the individual wires in the outer most layer of the finished conductor. However, joints in the inner layer(s) of the conductor unavoidably break during stranding provided such breaks are not associated with either inherently defective wire or with the use of short lengths of Aluminium Alloy wires. Such joints shall not be more than four (4) per conductor length and shall not be closer than 15 meters from joint in the same wire or in any other Aluminium Alloy wire of the completed conductor. A record of such joints for each individual length of the conductor shall be maintained by The Contractor for Employer's review.

Joints shall be made by cold pressure butt welding and shall withstand a stress of not less than the breaking strength of individual strands guaranteed.

II. Core Wires

There shall be no joint of any kind in the finished wire entering into the manufacture of the strand. There shall also be no joints or splices in any length of the completed stranded core. Splices of the fibers in composite cores are allowed as long as they conform to the requirements of ASTM B987 for Joints and Splices.

Tolerances

The manufacturing tolerances shall be as per IEC or relevant standards. For composite cores, the manufacturing tolerance shall be +/- 0.05 mm of the stated nominal value.

Materials

The materials used for construction of the conductor shall be such that the conductor meets the specified technical and the performance requirements.

I. Outer Layer

The material of outer layer of ACCC Conductor shall be of annealed aluminium 1350-O temper, high temperature resistant aluminum/ aluminum alloy added with zirconium or any other suitable elements to electrolytic aluminum having purity not less than 99.5% and a copper content not exceeding 0.04%. The Bidder shall guarantee the chemical composition in the GTP and also furnish description of the manufacturing process in the bid. It is to inform that the test shall be carried out as per the relevant standards.

II. Core

The core of this conductor shall be made of hybrid carbon and glass composite core utilizing a high temperature epoxy resin matrix to bind the individual fibers into a unified load bearing tensile member and the central carbon fibre core shall be surrounded by a high-grade boron free glass fibers to improve the flexibility and toughness. There shall be no galvanic corrosion between the carbon fibre core and the aluminium strands. The composite core shall exhibit an excellent Strength to weight ratio and has a lowest in the industry coefficient of thermal expansion which reduces the conductor sag under the high electrical load/high temperature conditions. The core material shall be of either high strength grade or extra high strength grade as per the latest ASTM B987.

The Bidder shall furnish properties and composition of the core wire strands in the GTP. The composite material for core shall be of such proven quality that its properties are not deteriorated by the normal operating conditions of 66kV transmission line in aforementioned General Technical Requirements (GTR). The Bidder shall provide adequate details including specifications / test reports / operating experience details/performance certificates etc. in support of the suitability of the offered materials. Care should be taken for internal friction due to different materials having different thermal coefficients of expansion.

The Bidder shall be required to offer a system to confirm the integrity of composite core immediately after conductor stringing and installation. The contractor must submit reports from past field measurement or a third-party report providing that integrity confirmation does work through the proposed system. Further the line(s) where this proposed system has been deployed to confirm the integrity of composite core should have been in satisfactory operation for a period of at least one year in any power utility. The contractor shall submit necessary documentation, training material and manuals to support this system within 30 days from the date of LOA.

Conductor Length

The Bidder shall determine the most appropriate individual conductor lengths to be manufactured & supplied keeping in view of the tower schedules, section lengths, special crossings, etc. The drum drawing as per IS 1778 or any international standard shall be submitted to the purchaser for review and approval. The Bidder shall also indicate the maximum single length of conductor that they can manufacture, in the GTP.

Standards

The conductors & accessories shall comply in all respects to the clauses of this specification as indicated above & with the specified standards.

Stranding

For all constructions, each alternate layer shall be stranded in opposite directions. The wires in each layer shall be evenly and closely stranded round the under-laying wire or wires. The final layer of wires shall have a right hand lay.

Packing

I. The conductor shall be supplied on a returnable basis (except for conductor to be given as mandatory spares), strong, painted steel drums provided with lagging of adequate strength, constructed to protect the conductor against all damage and displacement during transit, storage and subsequent handling and stringing operations in the field. The Supplier shall select suitable drums for supply of conductor and shall be responsible for any loss or damage to conductor and/or drum during transportation handling and storage due to improper selection of drum or packing.

II. The drums shall be suitable for wheel mounting and for letting off the conductor under a minimum controlled tension of the order of 5 kN.

III. The Bidder should submit their proposed drum drawings along with the bid.

IV. One conductor length only shall be wound on each drum.

V. The conductor ends shall be properly sealed and secured on the side of one of the flanges to avoid loosening of the conductor layers during transit and handling.

VI. The Ownership of the empty conductor drums shall lie with the conductor Supplier who shall ultimately take back the empty conductor drum within 1 month of notification from the Project site(s) from the erection contractor's designated stores after the running out of conductor from the drum.

VII. No tolerance limit on wastages/damages of drums are allowed and thus compensation on account of the same whatsoever.

Marking

Each drum shall have the following information stenciled on it in indelible ink along with other essential data:

(a) Contract/Award letter number.

(b) Name and address of consignee.

(c) Manufacturer's name and address.

(d) Drum number

(e) Size of conductor

(f) Length of conductor in meters

(g) Arrow marking for unwinding

(h) Position of the conductor ends

(i) Distance between outer-most Layer of conductor and the inner surface of lagging.

(j) Barrel diameter at three locations & an arrow marking at the location of the measurement.

(k) Number of turns in the outermost layer.

(l) Gross weight of drum after putting lagging.

(m)Tear weight of the drum without lagging

(n) Net weight of the conductor in the drum.

(o) Dispatch instruction.

The above should be indicated in the packing list also.

Verification of Conductor Length

The BPC reserves the right to verify the length of conductor after unreeling at least ten (10) percent of the drums in a lot offered for inspection.

Tests & Standards

Type Tests

Type tests on Stranded Conductor/ Stranded wire:

The following tests should have been conducted in the last Seven (7) years for which offer is made and should be submitted along with the bid. The bids without valid type test reports are liable for rejection.

All the specified type tests on ACCC Conductor offered by the bidder shall not be required to be carried out if valid test certificate is available i.e., tests conducted within last Seven (7) years from the date of bid opening in an accredited laboratory or witnessed by the representative(s) of a Utility.

In the event of any discrepancy in the test report (i.e., any test report not applicable due

to any design/material/manufacturing process change including substitution of components or due to noncompliance with the requirement stipulated in the Technical Specification) the tests shall be conducted by the Contractor at no extra cost to BPC.

Bidders shall indicate the laboratories in which they propose to conduct the type tests. They shall ensure that adequate facilities are available in the laboratories and the tests can be completed in these laboratories within the time schedule guaranteed by them.

On complete Conductor:

a) DC resistance test on stranded conductor

b) UTS test on stranded conductor

c) Stress- Strain test on stranded conductor and core at room temperature as per IEC 1089

d) Stress-strain test on stranded conductor and core at elevated

e) High temperature endurance & creep test on stranded conductor

f) Sheaves Test

g) Axial Impact Test

h) Crush Strength Test

i) Torsional Ductility Test

On Conductor Strand/core

a) Bending test on core

b) Compression test on core:

c) Coefficient of linear expansion on core/ core strands:

Acceptance Tests, Routine Tests and Tests during Manufacture shall be taken up as per the standard and requirements. Test reports shall be maintained.

Inspection

I. BPC's representative shall at all times be entitled to have access to the works and all places of manufacture, where conductor shall be manufactured and representative shall have full facilities for unrestricted inspection of the Supplier's works, raw materials and process of manufacture for conducting necessary tests as detailed herein.

II. The Supplier shall keep BPC informed in advance of the time of starting and of the progress of manufacture of conductor in its various stages so that arrangements can be made for inspection.

III. For ACCC conductor stringing supervision, the bidder will submit letter / certificate from offered principal core manufacturer / technology owner, confirming that the personnel which are expert & certified by technology owner in installation/stringing supervision of ACCC conductor must be deployed during entire duration of installation /stringing of the ACCC conductor

Standards

I. The conductor shall conform to the relevant Indian/International Standards, which shall mean latest revisions, with amendments/changes adopted and published, unless specifically stated otherwise in the Specification.

II. In the event of the supply of conductor conforming to standards other than specified, the Bidder shall confirm in his bid that these standards are equivalent to those specified. In case of award, salient features of comparison between the standards proposed by the Supplier and those specified in this document will be provided by the Supplier to establish their equivalence.

Measurements

Payment for conductor (supply & erection) shall be made on the basis of per km (horizontal/linear line length), irrespective of number of tension/suspension towers. No extra payment shall be made for sag, inclined distances between attachment points of conductors of the towers, jumpering, damages, losses, wastages etc. Quoted rates in the relevant price schedule deemed to have included the associated costs. If a contractor resorts to drone stringing, the associated cost is deemed to have included in the relevant price schedule.

CHAPTER 7b

ASCR CONDUCTOR

ACSR WOLF conductor shall be used in the line. The supply of the conductor shall be within the scope of the contractor.

The conductor specifications shall comply with IS-398(part-II)-1996 or such other standard as may be approved.

Each conductor's inner layer shall be covered with an approved grease (if specifically provided in the Principal Technical Parameters), such as Shell Ensis 356 or equivalent, which shall also completely fill the interstices between the strands of the outer layer. There shall be no excess grease remaining on the outside surface of the conductor, which may cause sand and dust particles to adhere during the pulling out and erection of conductors.

The outermost layer of the conductors shall be stranded with a right-hand layer.

Aluminium shall be of the highest purity commercially obtainable and shall not be less than 99.5 per cent. The contractor shall submit certificates of analysis giving the percentage and nature of any impurities in the metal from which the wires are made.

The wires shall be drawn in continuous length, without joints, except those made in wire rod or before drawing operation. During stranding in aluminium wire no welds shall be made for the purpose of achieving the required conductor length. Joints in wires other than those permitted above shall not be permitted in any stranded conductor containing seven wires.

For the purpose of material planning and consumption in hilly terrain, the inclined (sloped) distance between conductor attachment points of towers may be considered instead of the horizontal (plan) distance when calculating conductor, OPGW, and earthwire requirements.

The conductors shall be supplied on drums constructed to enable the conductors to run smoothly and at lengths as long as can be conveniently handled and erected.

The cut ends of conductors, together with the joints, clamps and fittings attached to the conductors themselves, shall be treated in an approved manner to prevent the ingress of moisture.

Measurement

Payment for conductor (supply & erection) shall be made on the basis of per linear km (linear km is horizontal distance measured between the attachment points of adjacent towers), irrespective of number of tension/suspension towers. No extra payment shall be made for sag, inclined distances between attachment points of conductors of the towers, jumpering, damages, loss, wastages, etc. Quoted rates in the relevant price schedule deemed to have included the associated costs.

CHAPTER 8

OPTICAL GROUND WIRE (OPGW)

1.0 Non-slotted Optical Ground Wire (OPGW) and accessories

The equipment to be supplied includes Non-Slotted Composite Optical Ground Wire (OPGW) and Accessories. The Scope shall include the following:

a) 48 & 24 cores, monomode, 1310nm wavelength armoured Non-Slotted OPGW complete with jointing material and accessories.

b) The minimum drum lengths of OPGW shall be 3.0 km as per the Employer's requirement. The Bidder should indicate the length of OPGW to be contained in each drum.

c) Jointing kits for the above

d) Accessories: Suspension Assembly, Tension Assembly (End Towers), Tension Assembly (both sides), Vibration Dampers (tension-type), Vibration Dampers (suspension type), Cable fixing C- clamps and Bonding Connections.

The Bidder shall furnish detailed Specifications for all accessories like anchor grip and vibration dampers.

2.0 Services to be furnished

The scope shall include supply, testing, stringing/ laying, jointing, installing and commissioning of Optical Ground Wire (OPGW) cable and its accessories. Bidder shall quote unit rates for stringing/laying per km, per joint, including testing and commissioning for OPGW cables.

The rates quoted shall also cover Contractor’s technicians' to-and-fro transport charges, boarding and lodging, daily allowance and local transport, taxes and duties as applicable.

3.0 Installation Tools and Other Equipment

The Bidder shall furnish the list of Tools and Tackles required and/or recommended for the installation and subsequent maintenance of the OPGW and cables, with unit prices. The Employer reserves the right to select any/or all the items offered depending upon the availability of the tools in the Employer's system and without assigning any reason.

The Bidder shall also quote for the other accessories indicated elsewhere in the Specification. The Employer reserves the right to select any/ all or more of the other equipment listed without assigning any reason.

4.0 Drum-Size

The exact number of drums shall, however, be finalized after the route survey.

It shall be the sole responsibility of the Bidder/vendor to ascertain the applicable restrictions on the weight and dimensions of drums for transport in the local area where inland transport is necessary, and Bidder/vendor shall ensure that the drum size and weight will not exceed the permissible limits.

Further, the Bidder shall clearly indicate in the offer all those details and give full justification for the size and weight selected.

5.0 General

For all OPGW equipment, the Bidder shall furnish the following information along with his offer:

Standing of the firm as the manufacturer of OPGW and accessories and experience in OPGW installation, testing and commissioning.

Details of testing facilities at manufacturer's works.

Measurement

Payment for EW/OPGW (supply & erection) shall be made on the basis of per linear km (linear km is horizontal distance measured between the attachment points of adjacent towers), irrespective of the number of tension/suspension towers. No extra payment shall be made for sag, inclined distances between attachment points of conductors of the towers, jumpering, damages, pull down lengths to junctions box, losses/wastages. Quoted rates in the relevant price schedule deemed to have included the associated costs.

6.0 Qualifying Requirements

The recommended makes of OPGW cable and accessories are indicated in the specifications.

The Employer may accept other makers at its own discretion. In case the Bidder offers any other make, the manufacturer shall have at least five years of experience in the successful commercial operation of the cables of the same design and manufactured in the same plant as proposed for this bid; however, though the acceptance/ rejection of these makes is solely at the discretion of the Employer.

The supplier of OPGW shall stand guarantee and depute his representative for Quality Assurance/Quality Control (QA/QC) checks, both during manufacturing and installation. If the Bidder is a licensee and meets the specified qualification requirement, the License agreement shall be valid until the guarantee period on the equipment undersupply is over. The licenser shall approve any design undertaken by the licensee. Manufacture by the licensee shall be done under Quality Assurance Program approved and monitored by the licenser. Licensers must guarantee the sequential and timely supply of equipment to meet the overall project program. Licenser must guarantee the individual and overall performance of all the equipment supplied under the Contract.

The Employer reserves the right to request any additional information and also reserves the right to reject or accept the proposal of any Bidder if, in the opinion of the Employer, the qualification data is incomplete or the Bidder is found not qualified to perform the Contract satisfactorily.

7.0 Codes and Standards

The equipment shall comply, in all respects, with the requirements of the latest editions of codes and standards of ITU-T- G.652D, Bureau of Indian Standards (BIS) and International Electrotechnical Commission (IEC).

Other National Standards are acceptable if they are established to be equal to or superior to the listed standards. In all such cases, however, copies of English translations of such National Standards shall be attached to the bid. The bids not complying with this requirement are liable for rejection.

In the event of any conflict between the codes and standards referred to elsewhere in this specification and the requirement of the specification, the requirement of this specification will govern.

8.0 Design and Performance Requirements

This section covers the design, performance and testing requirements of the fibre optic systems consisting of the cables, associated joints, accessories etc.

9.0 Fibre Optic Cable System

The fibre optic system will be used for voice and data communication, power circuit teleprotection signaling, Supervisory Control and Data Acquisition (SCADA), Security Management System (SMS) and video applications and Broadband Applications.

The performance requirement of the total loss of the link shall be well within the specified limit. The Optical Time Domain Reflectometer (OTDR) reading along with the trace printout, shall be made available for final acceptance by the Employer.

The Bidder shall indicate the method of manufacture of Optical Fibre i.e. IVD (Inside Vapour Deposition)/ OVD (Outside Vapour Deposition)/ PCVD (Plasma-activated Vapour Deposition)/ AVD (Axial Vapour Deposition)/ MCVD (Modified Chemical Vapour Deposition)

10.0 Cable Specifications

OPGW CABLE:

The OPGW shall be of Loose Tube Type: Three (3) Loose Tubes with Eight (8) fibres in each Loose Tube or four (4) Loose Tubes with six (6) fibres in each Loose Tube. The OPGW shall meet the minimum technical requirements specified in Chapter 11, under Principal Technical Parameters (PTPs).

The fibre shall be colour-coded for identification purposes, and the manufacturer's identification thread shall be applied while sheathing. The length marking should be done every metre on the entire length of the cable. The outer sheath should have been marked as 'F.O.C.' to identify the cable as Fibre Optical Cable. The Bidder shall clearly indicate the identification scheme employed and details of length marking.
The Bidder shall indicate in detail clearly in its offer the various measures taken/ proposed by him to limit the following types of losses to values in conformity with ITU and acceptable to Employer.

a) Wave guide dispersions
b) Microbending losses
c) Material dispersions
d) Ultraviolet absorption
e) Infrared absorption
f) Rayleigh scattering
g) Absorption by OH, Cu, Fe, Cr and/or impurities
h) Splice losses

The cables offered shall have Single Mode Optical Fibre and shall conform to CCITT (now ITU) Rec.G.652D (min.) and any specific requirements covered in these Specifications.

Primary Coating:
Each Optical Fibre shall be primarily coated with ultra violet (UV) cured acrylate.

Secondary Coating:
Each Optical Fibre shall have a double acrylate tight or loose secondary coating filled with compatible jelly.

Cable Strength Member:
A solid non-metallic (Kevlar or FRP material) member in the center core of the cable for strength and flexibility shall be used.

Core:
Primary and Secondary coated Optical Fibre shall be stranded around strength members to form the main core of the cable.

Optical Requirement at 20 °C:
The change in attenuation for 1km length in the temperature range +0°C to +60°C shall not exceed 0.2dB from the attenuation at 20°C.

The performance of the cable shall be guaranteed for an expected life of above 25 years.

Color coding of optical fibres:

Each fiber is to be color-coded in order to facilitate fiber identification. These coatings shall be color-coded as specified in TIA/EIA-598 and shall not degrade the optical cladding/core either mechanically or optically.

The coloring including marking shall be unambiguous using different colors. It shall be possible to identify all the optical fibers within each loose tube in a 300 mm length of optical cable core, provided that each loose tube is coded.

The coloring shall be permanent; it shall only be possible to remove the coloring by stripping off the coating or by using special solvents. The colors shall not fade inside the cable or as a result of exposure in the joint box or at the terminals. Coloring shall not prejudice any of the properties of the optical fiber or the cable

11.0 Accessories

The Bidder shall include in his offer complete details and jointing instructions of the splices with universal closures to be installed along the routes, pigtails/patch cords for terminating the cable into the interfacing equipment etc. The universal closures shall be provided with cast metal protection sleeves and arrangement for adequate grounding. The loss per splice shall not exceed 0.1 dB.

12.0 Information to be given by the Bidder

In addition to the guaranteed particulars called for in this section and information called for elsewhere in this specification, the Bidder shall give the following information with his offer.

- Cost of all accessories to make the whole system functional.
- Detailed drawings with dimensions of the cable and all accessories, including
  a) Indication of the material used in each type of construction
  b) Branch out joint boxes, enclosures for joint boxes and fibre distribution frame etc.
- Descriptive information regarding cable and accessories and list of installations of similar cables now in service with details of cable performance, outages suffered and cause of the outage.
- Recommended method for location of all types of cable and system faults.
- A complete and up-to-date experience list of the Bidder indicating all pertinent details of optical fibre cable supplied, installed and commissioned.
- Model nos. and detailed catalogues for the offered OPGW cable and all Accessories shall be furnished along with the Technical Bid.
- Notes on preparing OPGW for Splicing with illustrations showing OPGW fibres etc., inside the joint box and splice enclosures/ trays.
- A bar chart clearly indicating installation and commissioning periods at the site with all other details for OPGW.

13.0 Proposed On Site Training Requirements

S. No.	Item Description	Location	No. of trainees	Duration in working

				days
1	Training on Overhead Fibre Optic Cabling (OPGW) system including splicing of F.O. cable during installation	Bhutan	8	5

CHAPTER 9a

HARDWARE FITTINGS & ACCESSORIES FOR ACCC CONDUCTOR

This section details technical particulars of fittings viz. suspension clamps and compression type dead end clamps for the ACCC Conductor to be supplied by the bidder. Each fitting shall be supplied complete in all respects.

The fittings shall be suitable for attachment to suspension and tension insulator strings along with hardware fittings and shall include 2.5 % extra fasteners and Aluminum filler plugs. Indicative drawings of complete insulator strings along with hardware fittings as well as indicative drawings for suspension clamps and dead end clamps are enclosed with this specification. The supplier shall be responsible for satisfactory performance of the complete conductor system along with fittings offered by them for continuous operation at the maximum temperature specified by them for the conductor.

Corona and RI Performance

Sharp edges and scratches on all the hardware fittings shall be avoided. All surfaces must be clean, smooth, without cuts and abrasions or projections. The Supplier shall be responsible for satisfactory corona and radio interference performance of the materials offered by him.

Maintenance

The hardware fittings offered shall be suitable for employment of hot line maintenance technique so that usual hot line operations can be carried out with ease, speed and safety. The technique adopted for hot line maintenance shall be generally bare hand method & hot stick method.

Split Pins

Split pins shall be used with bolts & nuts.

Suspension Assembly

i. The suspension assembly, the bidder intend to supply, shall be suitable for the ACCC Conductor. The technical details of the conductor shall be as proposed by the bidder.
ii. The suspension assembly shall include either free centre type suspension clamp along with standard preformed armour rods or armour grip suspension clamp iii. The suspension clamp along with standard preformed armour rods set shall be designed to have maximum mobility in any direction and minimum moment of inertia so as to have minimum stress on the conductor in the case of oscillation of the same.
iii. The suspension clamp along with standard preformed armour rods set shall be designed to have maximum mobility in any direction and minimum moment of

inertia so as to have minimum stress on the conductor in the case of oscillation of the same.

iv. The suspension clamp suitable for various type of Conductor along with standard preformed armor rods/armor grip suspension clamp set shall have slip strength between 20 to 29 KN.

v. The suspension clamp shall be designed for continuous operation at thetemperaturespecifiedbythebidderforconductor.

vi. The suspension assembly shall be designed, manufactured and finished to give it a suitable shape, so as to avoid any possibility of hammering between suspension assembly and conductor due to vibration. The suspension assembly shall be smooth without any cuts, grooves, abrasions, projections, ridges or excrescence which might damage the conductor.

vii. The suspension assembly/clamp shall be designed so that it shall minimize the static & dynamic stress developed in the conductor under various loading conditions as well as during wind induced conductor vibrations. It shall also withstand power arcs & have a required level of Corona/RIV performance.

viii. The magnetic power loss shall not be more than 4 watts per suspension clamp, at designed rated sub-conductor current of 1400 amperes.

Free Centre Type Suspension Clamp

For the Free Centre Suspension Clamp seat shall be smoothly rounded and curved into a bell mouth at the ends. The lip edges shall have rounded bead. There shall be at least two U-bolts for tightening of clamp body and keeper pieces together.

Standard Preformed Armour Rod Set

i. The Preformed Armour Rods Set shall be used to minimize the stress developed in the sub-conductor due to different static and dynamic loads because of vibration due to wind, slipping of conductor from the suspension clamp as a result of unbalanced conductor tension in adjacent spans and broken wire condition. It shall also withstand power arcs. Chafing and abrasion from suspension clamp and localized heating effect due to magnetic power losses from suspension clamps as well as resistance losses of the conductor.

ii. The preformed armour rods set shall have right hand lay and the inside diameter of the helices shall be less than the outside diameter of the conductor to have gentle but permanent grip on the conductor. The surface of the armour rod when fitted on the conductor shall be smooth and free from projections, cuts and abrasions etc.

iii. The pitch length of the rods shall be determined by the Bidder but shall be less than that of the outer layer of conductor and the same shall be accurately controlled to maintain uniformity and consistently reproducible characteristics wholly independent of the skill of linemen.

iv. The length of each rod shall not be less than 1930 ± 25 mm and diameter shall not be less than 6.35 + 0.10 mm. The tolerance in length of the rods in the complete set should

be within 13 mm between the longest and shortest rod. The ends of the armour rod shall be parrot billed.

v. The number of armour rods in each set shall be eleven. Each rod shall be marked in the middle with paint for easy application on the line.
vi. The armour rod shall not loose their resilience even after five applications.

vi. The conductivity of each rod of the set shall not be less than 40% of the conductivity of the International Annealed Copper Standard (IACS).

Armour Grip Suspension Clamp

i. The armour grip suspension clamp shall comprise of retaining strap, support housing, elastomeric inserts with aluminum reinforcements and AGS preformed rod set.

ii. Elastomeric insert shall be resistant to the effects of temperature up to maximum conductor temperature guaranteed by the bidder corresponding to peak current, Ozone, ultraviolet radiations and other atmospheric contaminants likely to be encountered in service. The physical properties of the elastomer shall be of approved standard. It shall be electrically shielded by a cage of AGS performed rod set. The elastomer insert shall be so designed that the curvature of the AGS rod shall follow the contour of the neoprene insert.

iii. The length of the AGS preformed rods shall be such that it shall ensure sufficient slipping strength and shall not introduce unfavourable stress on the conductor under all operating conditions. However the length of AGS preformed rods shall not be less than 1760 + 16 mm for ACCC Conductor.

Dead end / Tension clamp Assembly

i) The dead end assembly shall be suitable for the proposed ACCC Conductor.

ii) The dead end assembly shall be of compression type with provision for compressing the jumper terminal at one end. The angle of the jumper terminal to be mounted should be 30° with respect to the vertical line. The area of bearing surface on all the connections shall be sufficient to ensure positive electrical and mechanical contact and avoid local heating due to I2R losses. The resistance of the clamp when compressed on Conductor shall not be more than 75% of the resistance of equivalent length of Conductor.

iii) Die compression areas shall be clearly marked on each dead-end assembly designed for continuous die compressions and shall bear the words ‘COM PRESS FIRST’ suitably inscribed near the point on each assembly where the compression begins. If the dead end assembly is designed for intermittent die compressions it shall bear identification marks ‘COMPRESSION ZONE’ AND ‘NON- COMPRESSION ZONE’ distinctly with arrow marks showing the direction of compressions and knurling marks showing the end of the zones. Tapered aluminum filler plugs shall also be provided at the line of demarcation between compression & non-compression zone. The letters, number and other markings on the finished clamp shall be distinct and legible. The dimensions of dead end assembly before & after compression along with

tolerances shall be guaranteed in the relevant schedules of the bid and shall be decided by the manufacturer so as to suit the conductor size & conform to electrical & mechanical requirements stipulated in the specification.

iv) The assembly shall not permit slipping of, damage to, or failure of the complete conductor or any part thereof at a load less than 95% of the ultimate tensile strength of the conductor.

Fasteners: Bolts, Nuts and Washers

i) All bolts and nuts shall conform to IS 6639. All bolts and nuts shall be galvanised as per IS 1367(Part-13)/IS 2629. All bolts and nuts shall have hexagonal heads, the heads being forged out of solid truly concentric, and square with the shank, which must be perfectly straight.

ii) Bolts upto M16 and having length upto 10 times the diameter of the bolt should be manufactured by cold forging and thread rolling process to obtain good and reliable mechanical properties and effective dimensional control. The shear strength of bolt for 5.6 grade should be 310 MPa minimum as per IS 12427. Bolts should be provided with washer face in accordance with IS 1363 (Part-1) to ensure proper bearing.

iii) Nuts should be double chamfered as per the requirement of IS 1363 Part- III 1984. It should be ensured by the manufacturer that nuts should not be over tapped beyond 0.4 mm oversize on effective diameter for size upto M16.

iv) Fully threaded bolts shall not be used. The length of the bolt shall be such that the threaded portion shall not extend into the place of contact of the component parts.

v) All bolts shall be threaded to take the full depth of the nuts and threaded enough to permit the firm gripping of the component parts but no further. It shall be ensured that the threaded portion of the bolt protrudes not less than 3 mm and not more than 8 mm when fully tightened. All nuts shall fit and tight to the point where shank of the bolt connects to the head.

vi) Flat washers and spring washers shall be provided wherever necessary and shall be of positive lock type. Spring washers shall be electro-galvanized. The thickness of washers shall conform to IS: 2016.

vii) The Contractor shall furnish bolt schedules giving thickness of components connected the nut and the washer and the length of shank and the threaded portion of bolts and size of holes and any other special details of this nature.

viii) To obviate bending stress in bolt, it shall not connect aggregate thickness more than three time its diameter.

ix) Bolts at the joints shall be so staggered that nuts may be tightened with spanners without fouling.

x) To ensure effective in-process Quality control it is essential that the manufacturer should have all the testing facilities for tests like weight of zinc coating, shear strength, other testing facilities etc, in-house. The manufacturer should also have proper Quality Assurance system which should be in line with the requirement of this specification and IS-.14000 services Quality System standard.

xi) Fasteners of grade higher than 8.8 are not to be used and minimum grade for bolt shall be 5.6.

Materials

The materials of the various components shall be as specified hereunder. The Bidder shall indicate the material proposed to be used for each and every component of hardware fittings stating clearly the class, grade or alloy designation of the material, manufacturing process & heat treatment details and the reference standards. The details of materials for different component are listed as in Table No-1.

Workmanship

i) All the equipment shall be of the latest design and conform to the best modern practices adopted in the Extra High Voltage field. The Bidder shall offer only such equipment as guaranteed by him to be satisfactory and suitable for 66 kV transmission lines and will give continued good performance.

ii) High current heat rise test shall be conducted by the supplier to determine the maximum temperature achieved in different components of fittings under simulated service conditions corresponding to continuous operation of conductor at rated maximum temperature. The material of the components should be suitable for continued good performance corresponding to these maximum temperatures. The supplier shall submit relevant type/performance test certificates as per applicable standards/product specifications to confirm suitability of the offered material.

iii) The design, manufacturing process and quality control of all the materials shall be such as to give the specified mechanical rating, highest mobility, elimination of sharp edges and corners to limit corona and radio-interference, best resistance to corrosion and a good finish.

iv) All ferrous parts including fasteners shall be hot dip galvanized, after all machining has been completed. Nuts may, however, be tapped (threaded) after galvanizing and the threads oiled. Spring washers shall be electro galvanized. The bolt threads shall be undercut to take care of the increase in diameter due to galvanizing. Galvanizing shall be done in accordance with IS 2629 / IS 1367 (Part-13) and shall satisfy the tests mentioned in IS 2633. Fasteners shall withstand four dips while spring washers shall withstand three dips of one minute duration in the standard Peerce test. Other galvanized materials shall have a minimum average coating of zinc equivalent to 600 gm/sq.m., shall be guaranteed to withstand at least six successive dips each lasting one (1) minute under the standard Peerce test for galvanizing.

v) The zinc coating shall be perfectly adherent of uniform thickness, smooth, reasonably bright, continuous and free from imperfections such as flux, ash rust, stains, bulky white deposits and blisters. The zinc used for galvanizing shall be grade Zn 99.95 as per IS: 209.

vi) In case of casting, the same shall be free from all internal defects like shrinkage, inclusion, blow holes, cracks etc. Pressure die casting shall not be used for casting of components with thickness more than 5 mm.

vii) All current carrying parts shall be so designed and manufactured that contact resistance is reduced to minimum.

viii) No equipment shall have sharp ends or edges, abrasions or projections and cause any damage to the conductor in any way during erection or during continuous operation which would produce high electrical and mechanical stresses in normal working. The design of adjacent metal parts and mating surfaces shall be such as to prevent corrosion of the contact surface and to maintain good electrical contact under service conditions.

ix) All the holes shall be cylindrical, clean cut and perpendicular to the plane of the material. The periphery of the holes shall be free from burrs.

x) All fasteners shall have suitable corona free locking arrangement to guard against vibration loosening.

xi) Welding of aluminum shall be by inert gas shielded tungsten arc or inert gas shielded metal arc process. Welds shall be clean, sound, smooth, uniform without overlaps, properly fused and completely sealed. There shall be no cracks, voids, incomplete penetration, incomplete fusion, under-cutting or inclusions. Porosity shall be minimized so that mechanical properties of the aluminum alloys are not affected. All welds shall be properly finished as per good engineering practices.

Bid Drawings

i) The Bidder shall furnish full description and illustrations of materials offered.

ii) Fully dimensioned drawings of the hardware and their component parts shall be furnished in two (2) copies along with the bid. Weight, material and fabrication details of all the components should be included in the drawings.

iii) All drawings shall be identified by a drawing number and contract number. All drawings shall be neatly arranged. All drafting & lettering shall be legible. The minimum size of lettering shall be 3 mm. All dimensions & dimensional tolerances shall be mentioned in mm.

iv) The drawings shall include :

a. Dimensions and dimensional tolerance.
b. Material, fabrication details including any weld details & any specified finishes & coatings. Regarding material designation & reference of standards are to be indicated.
c. Catalogue No.
d. Marking
e. Weight of assembly
f. Installation instructions
g. Design installation torque for the bolt or cap screw.

h. Withstand torque that may be applied to the bolt or cap screw without failure of component parts.
i. The compressions die number with recommended compression pressure.
j. All other relevant terminal details.

v) After placement of the award, the Contractor shall submit a fully dimensioned drawing including all the components in three (3) copies to BPC for approval.

ACCESSORIES FOR THE ACCC CONDUCTOR

General

This portion details the technical particulars of the accessories for Conductor.

2.5% extra fasteners, filler plugs and retaining rods shall be provided.

The supplier shall be responsible for satisfactory performance of the complete conductor system along with accessories offered by him for continuous operation at temperature specified for the ACCC Conductor.

Mid Span Compression Joint (Shall not to be permitted on this line)

Mid Span Compression Joint shall be used for joining two lengths of conductor. The joint shall have a resistively less than 75% of the resistivity of equivalent length of conductor. The joint shall not permit slipping off, damage to or failure of the complete conductor or any part thereof at a load less than 95% of the ultimate tensile strength of the conductor. It must be able to withstand the continuous design temperature of the conductor.

The dimensions of mid span compression joint before & after compression along with tolerances shall be guaranteed in the relevant schedules of the bid and shall be decided by the manufacturer so as to suit the conductor size & conform to electrical & mechanical requirements stipulated in the specification.

Connector

Connectors of compression type shall be used for jumper connection at tension tower. It shall be manufactured out of 99.5% pure aluminum / aluminum alloy and shall be strong enough to withstand normal working loads as well as able to withstand the continuous maximum operating temperature of the conductor. The connector shall have a resistivity across jumper less than 75% resistivity of equivalent length of conductor. The connector shall not permit slipping off, damage to or failure of complete conductor. The welded portions shall be designed for 30 kN axial tensile load. Leg sleeve of the connector should be kept at an angle of 15 deg. from the vertical and horizontal plane of the conductor in order to minimize jumper pull at the welded portion. The dimensions of connector along with tolerances shall be guaranteed in the

relevant schedules of the bid and shall be decided by the manufacturer so as to suit the conductor size & conform to electrical & mechanical requirements stipulated in the specification.

Repair Sleeve

Repair Sleeve of compression type shall be used to repair conductors with not more than two strands broken in the outer layer. The sleeve shall be manufactured from 99.5% pure aluminum / aluminum alloy and shall have a smooth surface. It shall be able to withstand the continuous maximum operating temperature of the conductor. The repair sleeve shall comprise of two pieces with a provision of seat for sliding of the keeper piece. The edges of the seat as well as the keeper piece shall be so rounded that the conductor strands are not damaged during installation. The dimensions of Repair sleeve along with tolerances shall be guaranteed in the relevant schedules of the bid and shall be decided by the manufacturer so as to suit the conductor size & conform to electrical & mechanical requirements stipulated in the specification.

Vibration Damper

Vibration dampers of 4R-stockbridge type are installed in the existing line at suspension and tension points on each conductor in each span along with bundle spacers to damp out Aeolian vibration as well as sub- span oscillations. One damper minimum on each side per sub-conductor for suspension points and two dampers minimum on each side per sub-conductor for tension points has been used for a ruling design span of the line for which replacement of conductor is being carried out.

The bidder shall offer a damping system including Stockbridge type dampers and bundle spacers for ACCC Conductor for its protection from wind induced vibrations which could cause conductor fatigue /strand breakage near a hardware attachment, such as suspension clamps. Alternate damping systems with proven design offering equivalent or better performance also shall be accepted provided the manufacturer meets the qualifying requirements stipulated in the Specifications.

Relevant technical documents including type test reports to establish the technical suitability of alternate systems shall be furnished by the Bidder along with the bid. The damper shall be designed to have minimum 4 nos. of resonance frequencies to facilitate dissipation of vibration energy through inter strand friction of the messenger cable and shall be effective in reducing vibration over a wide frequency range (depending upon conductor dia) or wind velocity range specified above. The vibration damper shall meet the requirement of frequency or wind velocity range and also have mechanical impedance closely matched with the offered ACCC Conductor. The vibration dampers shall be installed at suitable positions to ensure damping effectiveness across the frequency range. The power dissipation of the vibration dampers shall exceed the wind power so that the vibration level on the conductor is reduced below its endurance limit i.e. 150 micro strains. The bidder shall clearly indicate the method for

evaluating performance of dampers including analytical and laboratory test methods. The bidder shall indicate the type tests to evaluate the performance of offered damping system.

The clamp of the vibration damper shall be made of high strength aluminum alloy of type LM-6. It shall be capable of supporting the damper and prevent damage or chafing of the conductor during erection or continued operation. The clamp shall have smooth and permanent grip to keep the damper in position on the conductor without damaging the strands or causing premature fatigue failure of the conductor under the clamp. The clamp groove shall be in uniform contact with the conductor over the entire clamping surface except for the rounded edges. The groove of the clamp body and clamp cap shall be smooth, free from projections, grit or other materials which could cause damage to the conductor when the clamp is installed. Clamping bolts shall be provided with self locking nuts and designed to prevent corrosion of threads or loosening in service.

The messenger cable shall be made of high strength galvanised steel/stain less steel with a minimum strength of 135 kg/sq.mm. It shall be of preformed and post formed quality in order to prevent subsequent drop of weight and to maintain consistent flexural stiffness of the cable in service. The messengers cable other than stainless steel shall be hot dip galvanised in accordance with the recommendations of IS: 4826 for heavily coated wires.

The damper mass shall be made of hot dip galvanised mild steel/cast iron or a permanent mould cast zinc alloy. All castings shall be free from defects such as cracks, shrinkage, inclusions and blowholes etc. The surface of the damper masses shall be smooth.

The damper clamp shall be casted over the messenger cable and offer sufficient and permanent grip on it. The messenger cable shall not slip out of the grip at a load less than the mass pull-off value of the damper. The damper masses made of material other-than zinc alloy shall be fixed to the messenger cable in a suitable manner in order to avoid excessive stress concentration on the messenger cables which shall cause premature fatigue failure of the same. The messenger cable ends shall be suitably and effectively sealed to prevent corrosion. The damper mass made of zinc alloy shall be casted over the messenger cable and have sufficient and permanent grip on the messenger cable under all service conditions.

The damper assembly shall be so designed that it shall not introduce radio interference beyond acceptable limits.

The vibration damper shall be capable of being installed and removed from energized line by means of hot line technique. In addition, the clamp shall be capable of being removed and reinstalled on the conductor at the designated torque without shearing or damaging of fasteners.

The contractor must indicate the clamp bolt tightening torque to ensure that the slip strength of the clamp is maintained between 2.5 kN and 5 kN. The clamp when installed on the conductor shall not cause excessive stress concentration on the conductor leading to permanent deformation of the conductor strands and premature fatigue failure in operation.

The damper placement chart shall be submitted for spans ranging from 50 m to 350 m. Placement charts should be duly supported with relevant technical documents and sample calculations.

xii. The damper placement charts shall include the following

1) Location of the dampers for various combinations of spans and line tensions clearly indicating the number of dampers to be installed per conductor per span.
2) Placement distances clearly identifying the extremities between which the distances are to be measured.
3) Placement recommendation depending upon type of suspension clamps (viz free centre type/Armour grip type etc.)
4) The influence of mid span compression joints, repair sleeves & armour rods (standard& AGS) in the placement of dampers.

Material and Workmanship

i. All the equipment shall be of the latest proven design and conform to the best modern practice adopted in the extra high voltage field. The Bidder shall offer only such equipment as guaranteed by him to be satisfactory and suitable for 66 kV transmission line applications with ACCC Conductor and will give continued good performance at all service conditions.

ii. The design, manufacturing process and quality control of all the materials shall be such as to achieve requisite factor of safety for maximum working load, highest mobility, elimination of sharp edges and corners, best resistance to corrosion and a good finish.

iii. High current, heat rise test shall be conducted by the supplier to determine the maximum temperature achieved in different components of fittings under simulated service condition corresponding to continuous operation of conductor at rated maximum temperature. The material of the components should be suitable for continued good performance corresponding to these maximum temperatures. The supplier shall submit relevant type/ performance test certificates as per applicable standards/product specifications to confirm suitability of the offered material.

iv. All ferrous parts shall be hot dip galvanised, after all machining has been completed. Nuts may, however, be tapped (threaded) after galvanising and the threads oiled. Spring washers shall be electro galvanised as per grade 4 of IS-1573. The bolt threads shall be undercut to take care of increase in diameter due to galvanising. Galvanising shall be done in accordance with IS:2629/ IS- 1367 (Part-13) and satisfy the tests mentioned in IS-2633. Fasteners shall withstand four dips while spring washers shall withstand three dips. Other galvanised materials shall have a minimum average coating of Zinc equivalent to 600gm/sq.m and shall be guaranteed to withstand at least six dips each lasting one minute under the standard Peerce test for galvanising unless otherwise specified.

v. The zinc coating shall be perfectly adherent, of uniform thickness, smooth, reasonably bright, continuous and free from imperfections such as flux, ash, rust stains, bulky white deposits and blisters. The zinc used for galvanising shall be of grade Zn 99.95 as per IS: 209.

vi. In case of castings, the same shall be free from all internal defects like hrinkage, inclusion, blow holes, cracks etc.

vii. All current carrying parts shall be so designed and manufactured that contact resistance is reduced to minimum and localized heating phenomenon is averted.

viii. No equipment shall have sharp ends or edges, abrasions or projections and shall not cause any damage to the conductor in any way during erection or during continuous operation which would produce high electrical and mechanical stresses in normal working. The design of adjacent metal parts and mating surfaces shall be such as to prevent corrosion of the contact surface and to maintain good electrical contact under all service conditions.

ix. Particular care shall be taken during manufacture and subsequent handling to ensure smooth surface free from abrasion or cuts.

x. The fasteners shall conform to the requirements of IS: 6639-1972. All fasteners and clamps shall have corona free locking arrangement to guard against vibration loosening.

Compression Markings

Die compression areas shall be clearly marked on each equipment designed for continuous die compressions and shall bear the words ‘COMPRESS FIRST’ ‘suitably inscribed on each equipment where the compression begins. If the equipment is designed for intermittent die compressions, it shall bear the identification marks ‘COMPRESSION ZONE’ and ‘NON-COMPRESSION ZONE’ distinctly with arrow marks show the direction of compression and knurling marks showing the end of the zones. The letters, number and other markings on finished equipment shall be distinct and legible.

4.10 BidDrawings

The Bidder shall furnish detailed dimensioned drawings of the equipments and all component parts as per the standard.

Tests and Standards

Type Tests, acceptance tests and routine tests on the accessories shall be carried out as per the standard.

Inspection

The BPC’s representative shall at all times be entitled to have access to the works and all places of manufacture, where the material and/or its component parts shall be manufactured and the representatives shall have full facilities for unrestricted inspection of the Contractor’s, sub-

Contractor's works raw materials. Manufacturer's of all the material and for conducting necessary tests as detailed herein.

The material for final inspection shall be offered by the Contractor only under packed condition. The engineer shall select samples at random from the packed lot for carrying out acceptance tests.

The Contractor shall keep BPC informed in advance of the time of starting and of the progress of manufacture of material in its various stages so that arrangements could be made for inspection.

Material shall not be dispatched from its point of manufacture before it has been satisfactorily inspected and tested unless the inspection is waived off by BPC in writing. In the latter case also the material shall be dispatched only after all tests specified herein have been satisfactorily completed.

The acceptance of any quantity of material shall in no way relieve the Contractor of his responsibility for meeting all the requirements of the Specification, and shall not prevent subsequent rejection, if such materials are later found to be defective.

Packing and Marking

All material shall be packed in strong and weather resistant wooden cases/crates. The gross weight of the packing shall not normally exceed 200 Kg to avoid handling problems.

The packing shall be of sufficient strength to withstand rough handling during transit, storage at site and subsequent handling in the field.

Suitable cushioning, protective padding, spacers shall be provided to prevent damage or deformation during transit and handling.

Bolts, nuts, washers, cotter pins, security clips and split pins etc. shall be packed duly installed and assembled with the respective parts and suitable measures shall be used to prevent their loss.

Each component part shall be legibly and indelibly marked with trade mark of the manufacturer and year of manufacture.

All the packing cases shall be marked legibly and correctly so as to ensure safe arrival at their destination and to avoid the possibility of goods being lost or wrongly dispatched on account of faulty packing and faulty or illegible markings. Each wooden case/crate shall have all the markings stenciled on it in indelible ink.

Standards

The Hardware fittings; conductor and earth wire accessories shall conform to the following Indian/International Standards which shall mean latest revisions, with amendments/changes adopted and published, unless specifically stated otherwise in the Specification.

In the event of the supply of hardware fittings; conductor and OPGW accessories conforming to standards other than specified, the Bidder shall confirm in his bid that these standards are equivalent to those specified. In case of award, salient features of comparison between the Standards proposed by the Contractor and those specified in this document will be provided by the Contractor to establish their equivalence.

Accessories

The Bidder after his survey of the existing line shall determine the quantity and type of the accessories required for the turnkey job, which are to be supplied by them. These accessories should be suitable for the supplied conductor for its entire operating range without degradation of mechanical, metallurgical and electrical properties. The steady state temperature of hardware and accessories must not exceed 90°C during no wind and 50°C ambient temperature at minimum 650 Amp load. The contractor shall be responsible for satisfactory performance of complete conductor, hardware and accessories, offered by him, for continuous operation at temperatures corresponding to various conditions stipulated at Clause 3 of this technical specification.

CHAPTER 9b

INSULATORS & HARDWARE ACCESSORIES ACSR CONDUCTOR (APPLICABLE FOR INSULATOR RELATED WORKS).

1.0 Insulators

Suspension and tension insulator units shall be of the ball and socket type and shall comply with IEC 120, IEC 305 and IEC 383. The insulators shall be of porcelain manufactured by an approved manufacturer. Insulators shall be anti-fog type, designed with a view to service in a humid alpine climate.

Twin insulator strings and fittings shall be used for spans exceeding 600 m, road and river crossings etc.

Porcelain insulators shall be made from wet process porcelain of the highest grade which is dense and homogeneous. All porcelain surfaces exposed to the open air shall be glazed with standard brown colour. The glaze shall be smooth and hard and shall not be affected by weather or sudden change in temperature. The porcelain shall be glazed uniformly and properly.

Bidders shall include with their offers test certificates including thermal and mechanical performance, carried out in accordance with IEC 575 and issued by an approved internationally acknowledged reputable independent testing laboratory. The ball and socket arrangement shall comply with IEC 120 and tests shall be carried out in accordance with IEC 383 and IEC 575 outside the country of manufacture.

Retaining pins or locking devices for the insulator units themselves shall be of phosphor bronze or stainless steel. They shall be so made and shaped that when set, and under any condition of handling and service, nothing but extreme deformation of the retaining pin or locking devices shall allow separation of the insulator units of fittings, or shall cause any risk of the retaining pins or locking devices being displaced accidentally. The design shall be such as to allow easy removal for replacing of insulator units or fittings without the necessity to remove the insulator strings from the crossarms. Retaining pins or locking devices shall be capable of rotation when in position. All ball and socket joints on insulator sets shall be lightly coated with approved grease before erection.

2.0 Joints and Clamps

Conductor and Insulator fittings shall be designed in accordance with BS 3288: Part 1 and IEC 120, and insulator fittings shall be suitable for fitting or removal under live-line conditions. The electrical conductivity and current carrying capacity of each joint in the conductor shall be not less than an equivalent length of the conductor.

Full tension joints shall preferably be of the compression type and shall be made so as not to permit slipping of or causing damage to or failure of the complete conductor at a not less than 95 per cent of the ultimate strength of the conductor.

All aluminium full tension compression dead-ends and joints for conductors shall be of aluminium of a purity of not less than 99.5 per cent. Non-ferrous alloys shall be such as to withstand atmospheric conditions without painting or other protection. The Contractor shall submit certificates of analysis for the various parts.

The design of joints and clamps, and any special tools to be used in their assembly, shall be such as to reduce the possibility of faulty assembly to a minimum. All external nuts shall be locked in an approved manner. There shall be no relative movement within the clamp between individual layers of the conductor itself. Where mating faces of jumper terminals are to be bolted together, they are to be protected at the manufacturer's works by strippable plastic or other approved means.

Suspension and tension clamps shall be as light as possible and shall be of non-magnetic aluminium alloy. All clamps shall be designed to avoid any possibility of deforming the stranded conductors and separating the individual strands.

Suspension clamps shall be free to pivot in the vertical plane containing the conductor. They shall permit the complete conductor to slip at approximately 70% of the breaking load of the conductor. The conductor supporting groove shall be curved at its ends in the vertical plane to a radius of 150 mm and for a sufficient distance to allow for the conductor to leave the clamp at a minimum angle of inclination obtained in service. The mouth of the supporting groove shall be slightly flared in plan.

The grooves in the clamping piece or pieces shall be bell-mouthed at each end, and all conductor grooves and bell mouths shall be smooth and free from waves, ridges or other irregularities. Particular attention shall be paid to eliminating corona emissions from all parts of suspension clamps. The mechanical efficiency of tension clamps shall not be affected by methods of erection involving the use of "come along" or similar clamps before, during and after assembly, nor by the erection of the tension clamp itself. The maximum torque to be applied to the greased bolts (assumed 12 mm) of suspension clamps should not exceed 40 Nm. Light duty tension sets at the lower ends of slack spans shall be provided with turnbuckle adjusters.

Bolts and nuts shall be locked in an approved manner. Bolt threads shall be coated with approved grease immediately before tightening down at erection. Split pins for securing attachment of fittings of insulator sets shall be of stainless steel and shall be backed by washers of approved size and gauge.

As an acceptable alternative to bolted suspension clamps, Armour-grip suspension units of approved design and manufacture may be used for line or earth conductors. The Contractor shall submit samples of all units for examination and testing by the Employer before approval is given. All insulator strings shall be attached to cross arms by means of shackles. Hooks shall not be used.

3.0 Insulator and Construction Attachments

Hangers or swivels shall be fabricated or forged in such a manner and made from materials which ensure that they will remain free from fatigue or rapid wear with the specified working loads.

For light angles (0 – 5°), the insulator string attachments shall take the form of either solid swivels or hanger brackets, each of which shall be located by a pin and supported between two flanges. The flanges could be fabricated from channels or angles, or plates.

For angle and terminal towers, the insulator string attachments shall also take the form of solid swivels or hanger brackets supported between two flanges. In addition, the conductor swivels or hanger brackets shall be capable of taking conductor pulls at 30° above the horizontal plane through the axis of the pin and also shall be capable of hanging vertically to support suspension insulator strings as required.

The attachments for each phase shall be capable of taking all the combinations of transverse, vertical and longitudinal loads specified for that phase when applied to anyone hanger bracket, suspension swivel, strain, swivel, special attachment swivel or special attachment hole associated with that phase.

All parts of the insulator string, the conductor's special attachments, and the bolts which connect them to the tower cross-arm shall have a load factor of 3.0 for all the combinations of loads applied. The bolts used to connect the attachments to the tower, or the cross-arm shall be provided with extra thread length sufficient for two full nuts. Two full nuts shall be supplied for each bolt, and threads shall be coated with approved grease immediately / before tightening down at erection.

Pilot insulator strings may be used if required due to site conditions.

Pin and Cap

Pin and Cap shall be designed to transmit the mechanical stresses to the shell by compression and develop uniform mechanical strength in the insulator. The cap shall be circular with the inner and outer surfaces concentric, of such design that it will not yield or distort under load conditions.

The pin ball shall move freely in the cap socket but without danger of accidental uncoupling during erection or in position. The design of the disc should be such that stresses due to expansion or contraction in any part of the insulator shall not lead to deterioration.

Security clip

Security clip for use with ball and socket coupling shall be of R-shaped hump type which shall provide positive locking of the coupling as per IS:2486-(Part-Ill)/IEC : 372. The legs of the security clips shall be spread after installation to prevent complete withdrawal from the socket. The locking device should be resilient, corrosion resistant and of suitable mechanical strength. There shall be no risk of the locking device being displaced accidentally or being rotated when in position. Under no circumstances shall a locking device allow separation of insulator units or fittings.

The hole for the security clip shall be countersunk and the clip shall be of such design that the eye of the clip may be engaged by a hot line clip puller to provide for disengagement under energised conditions. The force required to pull the security clip into its unlocked position shall not be less than 50N (5 kg) or more than 500N (50 kg).

4.0 Arcing Horns

Arcing horns will be provided on each tower. The Contractor shall furnish the design of arching horns during the execution stage, and the Employer shall approve the same before implementation. Arcing horns gap shall be approx. 85% of insulator length. If the arcing horn gap is smaller than switching impulse withstand clearance or lightning impulse withstand clearance, an insulator unit shall be added to the insulator string to make the arcing-horn-gap longer than DSwitch_el and DLightning_el. The Contractor shall use an actual arcing horn gap according to the Contractor's insulator set design.

5.0 Vibration Dampers

Stockbridge type dampers of approved manufacture shall be fitted to all line conductor and OPGW suspension and tension points where at a temperature of 25°C without wind, the mass of conductor carried by any insulator set is less than 40% of the total mass of the corresponding line conductors included in the two adjacent spans.

One vibration damper shall be installed at each end of the span, with the gripping section being set at an approved distance from the end of the armour rod or other hardware. Two vibration dampers shall be installed at an approved distance on each side of the support where spans exceed 400 meters. The Employer may request further installations at selected locations after vibration experience has been observed through line inspections.

6.0 Armour Rods

Except where armour-grip suspension units are approved and used, armour rods shall be fitted at all suspension points. They shall be supplied by the Contractor and fitted strictly in accordance with the manufacturer's instructions.

7.0 Mid Span Clamp & Repair Sleeve

Accessories like mid-span joints, repair sleeves, flexible copper bonds etc., are not separately indicated in the price schedule since the use of such accessories in new lines shall be avoided. At the time of actual erection and stringing, if the need arises at all and the same is considered acceptable to the Employer at that time at his sole discretion, such approval shall be treated as a concession, and no additional payment shall be made.

CHAPTER 10

ERECTION, TESTING & COMMISSIONING WORKS

1.0 Tower Erection and Installation of Line Material

1.1 General

The details of the scope of erection work shall include the cost of labor, all tools and plants like tension stringing equipment and all other incidental expenses in connection with erection work.

The Contractor shall be responsible for transportation of all the materials to be provided by the Contractor as per the scope of work to the site, proper storage and preservation at this own cost till such time the erected line is taken over by the Employer. Similarly, the Contractor shall be responsible for proper storage, safe custody, loss or damage of all Employer-supplied items for incorporation in the works and shall maintain and render proper account for all such materials at all times. The Contractor shall reimburse the cost of any of the materials lost or damaged during storage and erection at prevailing market cost plus 15% extra to the Employer.

The contractor shall set up the required number of stores along the line, and the exact location of such stores shall be discussed and agreed to between the Contractor and the Employer.

Conductor Stringing

The ground wires shall be strung before the phase conductors are strung. The Contractor shall take special care that during the stringing of the phase conductor and ground wire to ensure that no contact is made with the ground or any obstacles such as walls, fences, or buildings etc. except when the conductors are at rest, nor shall they be over-strained during this process. Approved means shall be provided to prevent any damage to the conductors where these are run over temporary supports or where it is necessary, in the opinion of the Engineer, for the conductor to be laid on the ground.

Conductors which have been run out and not finally tensioned must not be left overnight either on the ground or within 4.5 m above ground level.

Drums shall be transported and positioned on station with the least possible amount of rolling. Drums shall be properly mounted at the drum station on the line and the battens shall be immediately refitted to the drums if any surplus conductor is left thereon.

The conductors, joints and clamps shall be erected in such a manner that no bird caging, over-tensioning of individual wires or layers, or other deformation, or damage to the conductors shall occur.

Clamps or hauling devices shall, under erection conditions, allow no relative movement of strands or layers of the conductor. If required by the Engineer, this property shall be demonstrated by actual tests.

The Contractor shall at his own expense make suitable arrangements for temporary guying of supports where necessary. Suitable plates (detachable or otherwise) shall be provided on the supports for the attachment of any temporary guys. The additional loads imposed on specific

support during conductor stringing by the use of temporary guys shall be calculated and submitted to the Engineer for appraisal prior to conductor stringing commencing.

The running out blocks at the tower which have angle shall have care not to twist the conductor during conductor running/stringing.

The conductor shall be pulled into the tensioner and into the stringing blocks without touching the ground. In the event the conductor touches or is dragged over the ground or any object the Contractor shall inspect the conductor for damage or foreign material and report to the Engineer.

The maximum pulling tension shall not exceed the sagging tensions as shown on the sag charts at any time. The cable pullers, tensioners, pulling lines, stringing blocks and running boards shall have an adequate margin of capability over this figure.

The Contractor shall inspect the running out block sheaves daily for free and easy movement in the blocks during stringing and sagging operations.

Each conductor shall be clamped in at suspension points and the adjacent spans fitted with spacer dampers or vibration dampers at a concurrent operation, after having been sagged and tensioned off at section supports. The maximum time period between clamping-in and fitting of spacer dampers or vibration dampers shall not exceed 36 hours, or such other time agreed with the Engineer.

If this period is exceeded the Engineer reserves the right to undertake a random inspection of the unclamped and lowered conductor and if necessary the cutting out and replacement of any suspect conductor. All expenses involved in the unclamping, conductor lowering, conductor replacement and re-sagging of the conductor shall be borne by the Contractor, whether or not any damage is found.

Installation/stringing supervision of ACCC conductor must be deployed during the entire duration of installation /stringing of the ACCC conductor. The cost of stringing supervision is deemed included in the contract price.

1.2 Treatment of Joints

Before starting assembly, the surface at joints shall be cleaned and, if required, applied with a coat of zinc-rich paint.

1.3 Assembly

1.3.1 Assembly of Towers

Towers shall be erected by a member-by-member method on the foundations, not earlier than 14 days after concreting and after such time that the concrete has acquired its full strength. However, when using a gin pole for tower erection, it shall be installed at the lowest section so as to avoid impact or overload on the foundation concrete. The towers shall be erected in workman like manner and its members shall not be strained or bent during the course of erection. Care shall be taken to see that the jointing surfaces are clean and free from dirt or grit. The tower erection shall be done in strict accordance with the approved drawings. After

initial erection all tower bolts shall be checked to ascertain that all nuts are fully tight. The Contractor shall adopt suitable means to ensure that none of the nuts have been left out. The bolt threads shall be punched to avoid the nuts becoming loose.

Punching of bolts shall be made by chamfering the threads with a centre punch in at least three places equally spaced on the contact surface of bolts and nuts. The Contractor shall be entirely responsible for the correct erection of all towers as per the approved drawings and their correct setting on an alignment approved by the Employer. If the stubs or superstructures after the erection are found to differ from approved drawing or to be out of alignment, the Contractor shall dismantle and re-erect them correctly at his own cost without extension of time. The towers must be truly vertical after erection, and no straining will be permitted to bring them alignment. The tolerance allowed for verticality will be 1 in 360 of tower height.

While erecting the towers the following points shall be taken care of.

a) Straining of the members shall not be permitted for bringing them into the position. However, if it is necessary to match hole positions at joints, tummy bars not more than 450 mm long may be used.
b) Before starting erection of an upper section, the lower section shall be completely braced and all bolts provided in accordance with approved drawings.
c) All plan diagonals relevant to a section of the tower shall be placed in position before the assembly of the upper section is taken up.

1.4 Tightening and Punching of Bolts and Nuts

All nuts shall be tightened properly using the correct size spanners. Before tightening, it will be seen that filler washers and plates are placed in relevant gaps between members and bolts of proper size and length are used with flat washers. The tightening shall progressively be carried out from the top downwards, care being taken that all bolts at every level are tightened simultaneously.

The threads of bolts projecting outside the nuts shall be punched at three positions on the diameters to ensure that the nuts are not loosened in the course of time. If, during tightening, a nut is found to be slipping or running over the bolt threads, the bolt together with the nut shall be replaced.

Any steel member with traces of holes filling shall not be used.

1.5 Replacement

If any replacements are to be affected after stringing and tensioning or during maintenance, leg members and main bracings shall not be taken out without reducing the tension on the tower with proper guying or releasing the conductor. If the replacement of cross-arms becomes necessary after stringing, the conductor shall be suitably tied to the tower at tension points or transferred to suitable roller pulleys at suspension points.

2.0 Miscellaneous Fittings

2.1 Tower Earthing

Steel supports need not be fitted with a separate earth bond and earthing continuity and will therefore depend upon the surface contact of bolted members and the contact between OPGW fittings and the structure steel. At suspension and tension towers, OPGWs shall be made electrically continuous by jumpers or other approved means and shall be bonded to the tower steelwork and to any concrete foundation reinforcing steel.

Each tower shall be earthed. The tower footing resistance shall not exceed 10 ohms. The Contractor shall measure the tower footing resistance (TFR) of each tower during dry weather after it has been erected and before the stringing of the earth wire. Pipe-type earthing and counter-poise-type earthing shall be done as required in accordance with the following standards:

IS: 3043 Code of Practice for Earthing.

IS: 5613 Code of practice for Design, Installation and maintenance (Part-II/Section-2) of overhead power lines.

The drawings for pipe & counterpoise-type earthing are enclosed with these specifications.

Pipe-type earthing shall be provided on one of the legs of every tower as per the site requirement..

For counterpoise-type earthing, the earthing will vary depending on soil resistivity. For soil resistivity less than 1500 ohms-meter, earthing shall be established by providing four lengths of 30m counterpoise wire. Otherwise, for soil resistivity greater than 1500 ohms meter earthing shall be established by providing four lengths of 70m counterpoise wire.

The provisional quantities for pipe-type earthing and counterpoise earthing are indicated in the SCHEDULE OF PRICE. The bidders are required to quote unit rates for the same in an appropriate schedule of SCHEDULE OF PRICE. The quoted price shall include fabrication, supply and installation of earthing material, including supply of coke, salt etc. In the case of counterpoise-type earthing, the unit rates shall correspond to 120 meters of counterpoise wire per tower.

3.0 Anti-Climbing Devices (Not applicable)

All towers shall be fitted with barbed wire type anti-climbing devices.

The anti-climbing devices shall be made with galvanized barbed wire of 8 SWG gauge and arranged on the tower at a suitable height in a suitable manner as approved by the Employer so as to have three circles of wire in the form of an umbrella on the outer side of the tower and a similar number on the inner side of the tower. The cost of supply and erection of the device shall be deemed to be included in the unit rate (unless provided as separate items in the Price Schedules) of the respective tower (or per tonne rate for SP and SSP type towers) and the rate shall further be deemed to include all costs of the umbrella of barbed wire put on the outer side and the inner side of the tower, including the M.S. angle supports with bolts and nuts to form the umbrella etc. along with all materials, labour and incidentals complete.

4.0 Climbing Step-bolts

Each tower shall be provided with step-bolts of an approved type on one corner leg at not more than 450 mm centres starting immediately above the anti-climbing device and continuing to the OPGWs
They shall conform to IS: 10238 – 1982.

Holes for removable step bolts below the anti-climbing guards shall be provided at not more than 380 mm centres on the legs to which the permanent step bolts are fitted.

5.0 Danger, Number, Phase and Circuit Plate

The Danger Plate shall be of mild steel 2 mm thick vitreous enameled at back and front, 250 mm x 200 mm rectangular shape and inscribed thereon shall be in single red the word "DANGER" with its Bhutanese translation and also with the inscription of bone and skull symbol and the voltage of the line, i.e. "66000 / 132000 / 220000 Volts". This shall conform to IS 2551 - 1963. There shall be two 16 mm x 40 mm fixing HRH, M.S. bolts with galvanized nuts and four nos. 2 mm thick lead washer on both ends of the plate. Matching holes shall be provided in the towers for the fixing of these plates

The Number Plate shall be of mild steel 2 mm thick vitreous enameled at back and front, 200 mm x 150 mm rectangular shape and inscribed thereon shall be the number of the tower location preceded by the letters corresponding to the short name of the line and the type of tower. There shall be two 16 mm x 40 mm fixing HRH, M.S. bolts with nuts and a 2 mm thick lead washer on both ends of the plate. The dimensions and details of the number plate shall be as per IS 5613: 1976. Matching holes shall be provided in the towers for the fixing of these plates.

The Phase Plates shall be of mild steel 16 gauge vitreous enameled at the back and front, circular in shape and diameter 75 mm. One set of phase plates shall consist of three plates coloured red, yellow and blue on the front to indicate the phase of the conductor.

There shall be one fixing HRH bolt on each plate of size 16 mm x 40 mm long with nut and 2 nos. 2mm thick lead washers. Matching holes shall be provided on the tower. The dimensions and details of the number plate shall be as per IS 5613: 1976.

Circuit Plates shall be provided and installed for the Double Circuit Towers.

6.0 Aviation Signal

Aviation requirements conforming to IS 5613 shall be in the scope of Contractor, wherever indicated in Schedule of Prices.

The river crossing towers and any other towers in the vicinity of the airport shall be painted and the crossing span shall be provided with markers to caution the low flying air-craft. The obstruction lights shall also be provided on towers.

The length of the towers above 45 m shall be painted over the galvanized surface in contrasting bands of orange or red and white as per aviation requirements and with the approval of the Employer. The band shall be horizontal. The width of the colour band shall be as per the relevant aviation regulation clause, prevalent at the time of execution of the project.

a) Surface Preparation

The etching of galvanized surface of erected tower members with suitable etching or wash primer is to be done as per IS 1477 to enhance the adhesion of subsequent applied paint coating. After etching of the galvanized surface of the tower, one coat of zinc primer is to be applied.

b) Painting of Towers

Two coats of international orange or red and white paint at alternate intervals (bands) as explained above are to be applied. The painting of towers shall generally confirm to relevant provisions of IS 1477 (Part- I& II). The paints to be used for painting shall be in accordance with IS 2074 with the latest amendments.

c) Line/span Markers

Sphere type span marker of 600 mm diameter shall be provided on the earthwire. The sphere shall be divided into two parts and one half shall be painted orange and one half in white. These markers shall be suspended from earthwire at intervals of approx. 200 meters. The design of the markers and their fixing arrangements should be such that they can withstand the wind pressure and shall not induce excessive amounts of vibrational strain on earthwire. Details of this arrangement shall be submitted by the Contractor along with Bid.

Night Markers (Obstruction lights)

The scope of night markers covers the design, manufacture, testing at manufacturers works, if any, supply, delivery, erection, testing and commissioning of medium intensity, low intensity, lights along with storage battery & solar panel, control panel, cables, clamps other accessories etc. as per the provision of IS-5613 (Part-II/section-I),1989, amendment no. 1, July'94 regarding night & day visual aids for denoting transmission line structures as per the requirement of the directorate of flight safety.

The detail of each component of medium intensity, low intensity lights & associated accessories to be provided on the towers shall be as per the technical specifications given in the preceding clauses and IS/ICAO, International Standards recommended practices.

One set of Aviation Lights shall consist of one medium intensity lights along with all accessories such as solar panel, control panel, batteries, cables etc.

a) Medium Intensity Light

Medium Intensity light shall be provided on the top of each tower. The medium light should have night time intensity as per ICAO requirements in International Standards Recommended Practices. The light on top of the structure should flash at the rate of 20 sequences per minute. The effective intensity during nighttime for the medium flashing light shall be 1600 CD. The light shall conform to ICAO requirements/BS 3224a and shall have weather protection conforming to IP-55.

The above lights conforming to ICAO specifications flashing red lights shall be DC operated through a suitably sized battery bank at the operating voltage 12V/24V DC. The burning life of the lamps shall be maximum possible in view of the maintenance hazard of H.T. live but in no case it should be less than 15,000 burning hours. In case of failure of the lamp before 15,000 burning hours, the same shall have to be replaced by the Contractor free of cost. The light shall be equipped with radio suppression facility conforming to BS800 in order to avoid any interference with signals of PLCC etc.

b) Low Intensity Lights

Two/four (as applicable) nos. of low intensity lights are required to be put on each of the towers. Placement drawing for the same shall be submitted by the bidder Contractor.

The light shall be a stationary lamp with minimum effective intensity of 10 CD. of red light. The lamps shall conform to the ICAO requirement/relevant BS and shall have weather protection of minimum IP-55 class.
Two/four nos. of L.I. lamp required for each tower shall be operated through a suitable size common battery bank solar panel as per the requirement of operating voltage and load current of the type of lamps being offered.

The burning life of the lamps shall be maximum possible in view of the maintenance hazard of H.T live line, but in no case it should be less than 15,000 burning hours. In case of failure of the lamp before 15,000 hrs. the same shall have to be replaced by the Contractor free of cost even if the pendency of contract expires. Performance certificate of the lamps to be offered shall be furnished by the Contractor.

The low intensity lamp shall not generate any R.F. which can interfere with the PLCC signals.

c) Storage Battery

Storage Battery required for the above purpose shall be sealed maintenance free, valve regulated lead acid and suitable for mounting on the top of the transmission line towers. Contractors shall offer the most optimum capacity of the Battery Bank at 120 hour discharge rate (considering 80 % percentage usage) matching with the load requirement of the type of lamps being offered including any power loss in the associated cables. The battery sizing shall conform to JISC 8707/relevant Indian Standard or any other internationally recognized standard. The battery shall be hermetically sealed explosion proof and self-resealing type and free from orientation constraints. The working temperature ranges shall be minimum 0 degree centigrade and maximum 50 degree centigrade. Performance certificate of the offered batteries shall be submitted by the Contractor.

d) Battery Box

The battery box suitable for mounting on power transmission towers shall be robust constructed to accommodate the desired number of SOLAR BATTERIES WITH proper clearance between the batteries. The sides and the top of the battery box shall

be made from MS sheets not less than 14 SWG thickness duly mounted on MS angle frame. The bottom of the battery box shall have suitably designed MS structure to freely hold the total weight of the batteries. The batteries should be placed on an insulated base with proper drainage holes. Lifting lugs shall be provided. Dust and vermin proof lockable doors shall be provided for safety and easy access to the batteries for the maintenance. The battery box should incorporate the design for proper ventilation system in order to prevent a gas concentration inside the box. The ventilation opening shall be protected against rain/splash water and dust. The inside of the battery box shall be lined with insulating polyurethane plating and the exterior painted with weather proof polyurethane paint. The cable entry into the battery box shall be through suitable cable glands.

e) Solar Modules

Solar module required for the system shall be suitable for mounting on the transmission line towers and shall be designed for high performance, maximum reliability and minimum maintenance and shall be installed below bottom cross arms levels. The solar modules shall be IP 55 grade protection class. These should be highly resistant to water, abrasion, nail, impact and other environmental factors.

These should be placed on the tower at a most optimum angle so as to harness the maximum solar energy and facilitate self cleaning and shall conform to relevant Indian/International Standards.

Module mounting frames shall be weather proof suitable for mounting on tall towers. Details of mounting frames shall be furnished by the Contractor.

Junction box shall be provided with weather proof hinged lid with provision for cable glands entry and protections grade of class IP-55.

The Contractor shall submit the basis of selecting the numbers of solar modules.

The provision for design, supply & erection of mounting arrangements for photovoltaic modules on the transmission towers in a suitable manner to harness maximum solar energy shall be in the scope of the Contractor.

Provision for design, supply & erection of resting platform for the erection of battery bank in a closed enclosure with safety arrangement on the transmission towers shall also be in the scope of the Contractor the design and load consideration for safety of towers due to additional plate form shall be kept in view while designing, selecting the above.

f) Control Panels

Control panels shall consist of solar charge controller, flasher unit, sensor, isolator, MCB, Voltmeter, Ammeter and other control gears. Panel enclosure shall be fabricated out of 14 SWG CRCA sheets and thoroughly treated and painted. A

suitable neoprene rubber gasket and pad locking device shall be provided and the protection class shall be of IP-55 class.

The Solar charge controller shall be the most efficient and preferably fully solid state. It shall be provided with protection to load against the increase in temperature. Surge, automatic low voltage and automatic disconnection and reconnection during high inrush current and normalcy respectively.

The flash regulator shall be provided for regulating light flashing. The same shall be completely solid state and provided with flash rate set points. Protection against overload currents shall also be provided.

Necessary sensor/timer shall be provided in the system to "switch on" the light automatically in the evening and poor visibility period and switch off the same during daytime and normal visibility period.

g) Cables, Cable Glands, Conduits and Accessories

The cable to be supplied and erected shall be of multi strands copper conductor, weatherproof, PVC insulated PVC sheathed, armoured 1.1 KV grade. The same shall conform to IS:1554.

All the cable accessories such as thimble, glands etc. shall be in the scope of supply and erection of the Contractor.

Supply and erection of all the PVC conduits and accessories shall be in the scope of the contract. All the conduit and accessories shall be as per the relevant ISS or ISI brand.

The inter-connection cable/conduit will be clamped in a secured manner with the tower members and any interconnection should be made only inside the environmentally protected junction box.

Employer will obtain clearance from the competent authority for erecting such towers, which require aviation signals. The Contractor shall provide any type of aviation signals as will be suggested by the Aviation Authority in addition to those, if any, suggested above.

7.0 Erection Equipment

The Contractor shall supply the following erection equipment as part of the Contract:

Hand-operated hydraulic compressors suitable for making all compression joints specified in Clause 2.4. Each compressor shall be complete with all dies. Repair and maintenance tools and spare parts, including oil seals, shall be included, together with an operation, repair and maintenance manual. Each compressor and accessory shall be housed in a robust lockable case-

Portable earthing kits for 132 kV lines comprising 3 phase set of earth and line clamps, 10-metre flexible leads and 2.5 m fibreglass operation pads.

- Comealong clamps for the conductor.

- Dead-end stocking for the conductor.

- Midspan stocking for the conductor.

The cost of supplying the above erection equipment shall be deemed included in the contract, and no separate payment will be applicable.

8.0 Final checking, Testing & Commissioning

After completion of the Works, final checking of the line shall be undertaken to ensure that all the foundation works, tower erection, stringing etc., have been done and clearance provided strictly according to the Specifications and as approved by the Employer.

Before testing and commissioning, the following points shall be checked:

- Sufficient backfilled earth is lying over each foundation pit, and it is adequately compacted.
- Concrete chimneys and other copings are in good and finally shaped conditions.
- All the tower members are correctly used and in accordance with the final approved drawings and are free from any defect or damage whatsoever.
- All bolts are properly tightened and punched/bolted.
- The stringing of conductors and OPGW has been done as per approved sag and tension calculations, and the required clearance is clearly available.
- Installation and stringing supervision for the ACCC conductor shall be deployed throughout the entire duration of conductor installation/stringing. The Contractor shall verify the integrity of the composite core immediately upon completion of stringing and installation by carrying out appropriate tests, at no additional cost to the Employer.

Tests shall be conducted at selected points along the routes as required by the Employer to check that the total and tentative sags of the conductor and OPGW are within specified tolerances. After satisfactory testing of the line and on approval by the Employer, the line shall be energized at full operating voltage.

CHAPTER 11

PRINCIPAL TECHNICAL PARAMETERS (PTPs)

This Chapter covers Principal Technical Parameters for towers, conductors, OPGW, insulators, hardware and complete accessories required for 66 kV, 132 kV and 220 kV transmission lines. However, the Bidders shall furnish all the Guaranteed Technical Particulars (GTPs) of all the equipment/materials offered by him as per the format provided in the relevant Schedule of this Specification for the specified bid. All the equipment/materials offered by the Bidder shall conform to the following Principal Technical Parameters:

1.0 System Particulars

Particulars	Nominal System Voltage(kV)		
	66	**132**	**220**
System Voltage (kV)	66	132	220
Highest System Voltage (kV)	72.5	145	245
Frequency (Hz)	50	50	50
Neutral	Effectively grounded	Effectively grounded	Effectively grounded
Basic Insulation level (BIL) kV (Peak)	325	650	1050
Power frequency withstand voltage (kV)	140	230	460
Short-circuit level (kA)	50	50	50

2.0 Transmission Towers

Design Spans

The design of the circuits shall provide for the following Basic Spans, Wind Spans and Weight Spans:

Basic Span

Nominal Voltage System(kV)	Basic Span(meters)
66	250
132	335
220	350

Wind Span and Weight Span for Non-Snow Towers

The design shall be based on the following tower types and Wind and Weight Span.

(a) 66 kV line

ID	Tower Type	Line Angle	Wind Span (metres)	Weight Span (metres)			
				+ve		-ve	
				NC	BWC	NC	BWC
B	Small Angle (Strain)	0 - 15°	250	750	450	750	450
C	Medium Angle (Strain)	15 - 30°	250	750	450	750	450
D (*)	Heavy Angle (Strain)	30 - 60°	250	750	450	750	450
SP	Special (Strain)						

(b) 132 kV line

ID	Tower Type	Line Angle	Wind Span (metres)	Weight Span (metres)			
				+ve		-ve	
				NC	BWC	NC	BWC
B	Small Angle (Strain)	0 - 15°	335	1000	600	1000	600
C	Medium Angle (Strain)	15 - 30°	335	1000	600	1000	600
D (*)	Heavy Angle (Strain)	30 - 60°	335	1000	600	1000	600
SP	Special (Strain)						

(c) 220 kV line

ID	Tower Type	Line Angle	Wind Span (metres)	Weight Span (metres)			
				+ve		-ve	
				NC	BWC	NC	BWC
B	Small Angle (Strain)	0 - 15°	350	1000	600	1000	600
C	Medium Angle (Strain)	15 - 30°	350	1000	600	1000	600
D (*)	Heavy Angle (Strain)	30 - 60°	350	1000	600	1000	600
SP	Special (Strain)						

Wind Span and Weight Span for Snow Towers

The design shall be based on the following tower types and Wind and Weight Span.

(a) 66 kV line

ID	Tower Type	Line Angle	Wind Span (metres)	Weight Span (metres)			
				+ve		-ve	
				NC	BWC	NC	BWC
SB	Small Angle (Strain)	0 - 15°	250	750	450	750	450
SC	Medium Angle (Strain)	15 - 30°	250	750	450	750	450
SD	Heavy Angle (Strain)	30 - 60°	250	750	450	750	450
SSP	Special (Strain)						

(b)132 kV line

ID	Tower Type	Line Angle	Wind Span (metres)	Weight Span (metres)			
				+ve		-ve	
				NC	BWC	NC	BWC
SB	Small Angle (Strain)	0 - 15°	300	900	900	540	540
SC	Medium Angle (Strain)	15 - 30°	300	900	900	540	540
SD	Heavy Angle (Strain)	30 - 60°	300	900	900	540	540
SSP	Special (Strain)						

(c) 220 kV line

ID	Tower Type	Line Angle	Wind Span (metres)	Weight Span (metres)			
				+ve		-ve	
				NC	BWC	NC	BWC
SB	Small Angle (Strain)	0 - 15°	300	900	900	540	540
SC	Medium Angle (Strain)	15 - 30°	300	900	900	540	540
SD	Heavy Angle (Strain)	30 - 60°	300	900	900	540	540
SSP	Special (Strain)						

Shielding Angle (Degree)	:	30 Degrees
Max. Tower Footing Resistance (Ohm)	:	10
Max. length of conductor for counterpoise earthing	:	30 m (approx. per leg)

3.0 ACSR CONDUCTOR

The Employer has standardized the use of conductor in various voltage level. ACSR WOLF Conductor shall be used for 66kV voltage level, ACSR PANTHER Conductor shall be used for 132kV voltage level and ACSR ZEBRA Conductor shall be used for 220kV voltage level.

3.1 ACSR WOLF Conductor

1. Conductor Code Name	:	'Wolf' ACSR
2. IS applicable	:	IS-398 (part-II)-1996
3. Wire diameter		
Aluminium	:	30/ 2.59mm.
Steel	:	7/ 2.59 mm.
4. Requirement of Grease (Yes / No)	:	No

3.2 ACSR PANTHER Conductor

1. Conductor Code Name	:	'Panther' ACSR
2. IS applicable	:	IS-398 (part-II)-1996
3. Wire diameter		
Aluminium	:	30/3.00 mm.
Steel	:	7/3.00 mm.
4. Requirement of Grease (Yes / No)	:	No

3.3 ACSR DOG Conductor

1. Conductor Code Name	:	'DOG' ACSR
2. IS applicable	:	IS-398 (part-II)-1996
3. Wire diameter		
Aluminium	:	6/4.72 mm.
Steel	:	7/1.57 mm.
4. Requirement of Grease (Yes / No)	:	No

4.0 Optical Ground Wire (OPGW)

I. Mechanical Properties (As per tower design):

a) For 66 / 132 kV

Overall Diameter	:	<11.85mm
Weight	:	<0.426 kg/m
Breaking Load	:	>5600 kg
Short time current rating (1 sec)	:	≥ 6.32 kA
Modulus of Elasticity	:	12674 kg /sq.mm
Cross Sectional Area	:	74 sq.mm
Coefficient of Linear Expansion (/^{o}C)	:	14.3×10^{-6}

b) For 220 kV

Overall Diameter	:	<16.75mm
Weight	:	<0.595 kg/m
Breaking Load	:	>8005 kg
Short time current rating(1 sec)	:	≥ 16 kA
Modulus of Elasticity	:	8,588 kg /sq.mm
Cross Sectional Area	:	159 sq.mm
Coefficient of Linear Expansion	:	18.7×10^{-6}

II. Fibre Details

Type of fibre	:	Monomode
Number of cores	:	24 nos.
Number of tubes	:	3 Nos.
Wave band optimised	:	1310 nm
Mode field diameter	:	9.5 µmtr + 10%
Cladding diameter	:	125 µmtr + 2.4%
Non-Concentricity Core/cladding	:	< 1µmtr at 1300 nm
Non-circularity of cladding	:	< 2.5µmtr
Cut-off wavelength	:	1285 nm
Total dispersion	:	3.5 ps/nm-km
Attenuation at 1300 nm	:	< 1.0 dB/km
Attenuation at 1500 nm	:	< 0.5 dB/km
Moisture Proof	:	Required

4.1 OPGW Hardware

4.1.1 Suspension Clamps

i)	Type	Preformed Armour Grip Suspension Clamps
ii)	Material for Armour rods	Aluminium Alloy
iii)	Slip strength	Not less than 12 kN and not more than 17 kN
iv)	Minimum failing load	25 kN
v)	Galvanization spring washers	Electrogalvanised
vi)	Other ferrous parts	Hot-dip galvanised

4.1.2 Dead End Assembly

i)	Type		Bolted type / helical preformed type
ii)	Material		
	a)	Body	Forged steel
	b)	Bolts & Nuts	Galvanised steel
iii)	Minimum slip strength		Not less than 0.95 times the OPGW rated tensile strength
iv)	Galvanisation		
	a)	Spring washers	Electrogalvanised
	b)	Other ferrous parts	Hot-dip galvanised

4.1.3 Grounding Wire for Clamps

i)	Material	All Aluminium/Aluminium Alloy Conductor
ii)	Wire diameter	Equivalent size of OPGW
iii)	Length	1500mm Long
iv)	Connecting lugs suitable for	One for 12mm dia bolt and other for 16mm dia bolt

4.1.4 Structural Attachment Clamp Assemblies

No. of Grooves	:	2 (One on either side of connecting bolts and suitable for locating OPGW on inside of the tower).

Galvanising

a)	Spring washers	:	Electrogalvanised
b)	Other ferrous parts	:	Hot dip Galvanised

4.1.5 Vibration Dampers

i)	Type		4R Stockbridge
ii)	Material		
	a)	Clamp	Aluminium alloy
	b)	Messenger cable	High strength Galvanised steel or stainless steel with a minimum strength not less than 135 kg/sq mm.
	c)	Weights	Hot dip galvanised mild steel/ Cast iron.
iii)	Galvanisation		
	Spring washers		Electrogalvanised as per IS:1573-1970
	Other ferrous parts		Hot-dip galvanised
	Castings		As per BS:729-1961
	Wires		As per IS:4826-1968
	Bolts & Nuts		As per IS:5358-1969
iv)	Maximum permissible dynamic strain on the groundwire with the damper.		+/-150 micro strains
v)	Minimum no. of cycles for fatigue performance		Ten Million
vi)	Amplitude for fatigue test frequency in Hz		25/f, where f is the highest resonant

4.1.6 Shield Wire Joint Boxes

1. Sturdy, all-weather-proof units

2. Complete all necessary hardware to retain, terminate, protect and splice the fibers.

3. Suitable clamps for fixing the tower without drilling holes in the tower structure.

5.0 Long Rod Polymer Insulators

Sl. No.	Description	Unit	Requirement
1	Insulator type		Long rod polymer insulator
2	Size & designation of ball & socket assembly	mm	16
3	Core diameter	mm	18 ±0.5
4	Nominal length (Section length)	mm	870 ±28
5	Dry Arcing distance	mm	738
6	Shed Profile		Aerodynamic
7	Shed profile (Regular or alternating)		Alternate
8	Shed diameter – Big/small	mm	140/110, tolerance as per IEC
9	Minimum creepage distance	mm	2248, No negative tolerance
10	Guaranteed mechanical strength	kN	90
11	Routine mechanical load	kN	45
12	Rated system Voltage	kV	66
13	Highest system voltage	kV	72.50
14	Rated frequency	Hz	50
15	**Insulator material:**		
	a. FRP Rod		ECR Grade Boron Free
	b. Shed with % contents of silicone		30%
	c. Housing		Silicone Rubber
	d. End Fittings - Ball	Ball	Gr. EN8 D-Forged
	e. End Fittings - Socket	Socket	SG Iron - Cast
	f. Grading Rings		-
16	Minimum thickness of sheath covering over the core	mm	3
17	Power frequency withstand voltage (Wet/Dry)	kV_{rms}	140/160
18	Impulse withstand voltage (Dry)		
	a. Positive	$kV_{(peak)}$	350

	b. Negative	$kV_{(peak)}$	350
19	Galvanizing – Minimum mass of zinc coating	gms/sq.mt	620
20	Packing		Corrugate tube
21	Applicable standard for manufacturing and testing		As per IEC 61109

5.1 Standard Disc Insulator

Differential insulation will be employed and insulator strings assemblies of all types such as Single and Double String Tension and Single Pilot Suspension assemblies shall consist of the following number of insulator discs:

Nominal System Voltage(kV)	**Single Suspension/ Pilot String**	**Double Suspension String**	**Single Tension String**	**Double Tension String**
66	1 x 7	2 x 7	1 x 7	2 x 7
132	1 x 9	2 x 9	1x 10	2 X 10
220	1 x 16	2 x 16	1 x 16	2 x 16

Insulator units shall comply with the following minimum requirements:

Parameters	**Value**		
	66 kV	**132 kV**	**220 kV**
Disc diameter(mm)	280	280	280
Unit spacing(mm)	145	145	145
Creepage distance(mm)	440	440	440
Minimum Mechanical Failing Load(kN)	70	90	120

Physical Characteristics

a) Type — Ball and Socket

b) Colour (Porcelain insulator) — Brown

c) Surface — Glazed

d) Locking device — R type security clip

ANNEX A

LIST OF APPROVED MAKES

A. Steel (*)

1. M/s Steel Authority of India (SAIL)
2. M/s TISCO, Jamshedpur
3. M/s State Trading Corporation of Bhutan
4. Authorized Dealers in Bhutan

(*) The Employer will monitor purchases of structural steel and reinforcement steel bars, and hence Contractor shall inform the Employer prior to the purchase of steel.

B. Cement

Cement shall be from manufacturers in Bhutan**.**

C. ACSR Conductors

1. M/s Sterlite Industries (India) Ltd., Pune
2. M/s Apar Industries Ltd., Vadodara
3. M/s Deepak Cables (India) Ltd., Bangalore
4. M/s Smita Conductors Ltd., Mumbai
5. M/s Hindustan Vidyut Products Ltd., New Delhi
6. M/s Sharavathy Conductors Ltd. Bangalore
7. M/s Polycab Wires Pvt. Ltd. Mumbai
8. M/s Prem Cables (Private) Limited, Pali, Rajasthan
9. M/s J S K Industries Ltd., Mummai
10. M/s Shashi Cable Ltd., Lucknow
11. M/s Cabcon India Ltd., Kolkata
12. M/s Sturdy Industries Ltd., Parwanoo, Himachal Pradesh
13. M/s Lumino Industries Ltd., Kolkata
14. M/s Gammon India Ltd., Silvasa
15. M/s Vijay Electricals Ltd., Roorkee
16. M/s Northeast Cables & Conductors Ltd, Sikar, Rajasthan
17. M/s Hind Aluminum Industries Ltd., Silasa
18. M/s The India Fruits Private Ltd., Raja Mundari, Andhra Pradesh
19. M/s Diamond Power Infrastructure Ltd., Vadodara
20. M/s Oswal Cables Pvt Ltd., Jaipur
21. M/s Galaxi Transmission Pvt. Ltd., Silvasa

D. G. S. EARTHWIRE

1. M/s Bharat Wire Ropes, Mumbai
2. M/s Ratlam Wire Pvt. Ltd, Ratlam
3. M/s Usha Martin Industries, Ranchi
4. M/s Ramswarup Industrial Co. Ltd. Kolkata
5. M/s UIC Wires Ltd., Kolkata
6. M/s Manohar Lal Hira Lal, Ghaziabad
7. M/s Bedmutha Industries Ltd., Nashik

E. OPGW CABLE

1. M/s Corning, USA
2. M/s Hitachi Ltd., Japan
3. M/s Furukawa, Japan / China
4. M/s NKT Cable, Germany
5. M/s L S Cables, Korea
6. M/s Phillips Fitel, Canada
7. M/s Prysmian Cable, Spain
8. M/s Alcatel, Canada
9. M/s Draka Cable, Germany
10. M/s ZTT, China
11. M/s APAR, India

F. INSULATORS

1. M/s BHEL, Bangalore/Jagdeeshpur
2. M/s W. S. Industries (India) Ltd., Chennai
3. M/s Aditya Birla Insulators Pvt. Ltd., Hoogly
4. M/s IEC Insulators and Electricals Co., Bhopal
5. M/s Allied Ceramics Pvt. Ltd., Kolkata

G. TRANSMISSION LINE HARDWARE & ACCESSORIES FOR CONDUCTORS & G. S. EARTHWIRE

1. M/s EMI transmission Ltd, Mumbai
2. M/s Tag Corporation, Chennai
3. M/s Asbesco India Pvt. Ltd., Kolkata
4. M/s International Transmission Products Ltd, Mumbai.
5. M/s Rashtraudyog Ltd., Kolkata
6. M/s Modern Malleables Limited, Kolkata
7. M/s Supreme & Co Pvt. Ltd., Kolkata
8. M/s IAC Electricals Pvt. Ltd., Kolkata
9. M/s Karamtara Engineering Pvt. Ltd, Mumbai
10. M/s Mosdorfer India Pvt. Limited, Nashik

H. BOLTS, NUTS & WASHERS

1. M/s Nexo industries (P) Ltd. Ludhiana
2. M/s Techman (India), Chandigarh
3. M/s Deepak fasteners,Ludhiana
4. M/s Ravi Engineers, Amritsar
5. M/s Bharat Industries Howrah
6. M/s Agrawal Fasteners, Mumbai
7. M/s Millenium Structurals Ltd., Indore
8. M/s Karamtara Engineering Pvt. Ltd., Thane
9. M/s J. C. Fasteners Ltd., Rohtak
10. M/s Garg Fasteners, Ludhiana
11. M/s Forex Fastener, Ludhiana
12. M/s Sterling Bolts Pvt. Ltd., Kolkata
13. M/s Precision Auto Engineers, Ludhiana
14. M/s DLF International Ltd., Ludhiana
15. M/s Remax (India), Ludhiana
16. M/s Anshika Fasteners Pvt. Ltd. Nagpur
17. M/s ASP Pvt. Ltd., Kolkata

18. M/s Pankaj International, Ludhiana
19. M/s Bharat Overseas, Ludhiana
20. M/s AV Forging, Ropar
21. M/s HR Steel Industries, Howrah
22. M/s Durafast Automotive Pvt Ltd., Vishakhapatnam
23. M/s Pioneer Nuts & Bolts Pvt Ltd., Ludhiana
24. M/s Parambari Engineers, Nagpur
25. M/s Turmo Industries Pvt Ltd., Ludhiyana
26. M/s Roshan Impex Pvt Ltd., Ludhiana
27. M/s Isitva Fasteners Pvt Ltd., Hydrabad
28. M/s LPS Bossad Pvt Ltd., Rohtak

I. TRANSMISSION LINE STRUCTURES/TOWER

1. M/s KEC International Ltd., Mumbai
2. M/s L& T Ltd. Mumbai
3. M/s Tata Projects Ltd., Nagpur
4. M/s Jyoti Structures Ltd, Mumbai
5. M/s Gammon India Ltd., Nagpur
6. M/s Hyundai Unitech Ltd., Nagpur
7. M/s Kalpataru Power Trans. Ltd., Gandhinagar
8. M/s Man Structures Ltd, Jaipur
9. M/s Utkal Galvansers Ltd., Orissa
10. M/s Skipper Steel Ltd., Kolkata
11. M/s Steel Products Ltd. Kolkata
12. M/s Maharashtra Power Transmission Structure Pvt. Ltd., Mumbai
13. M/s Bajaj Electricals Ltd., Pune
14. M/s ICOMM Tele Ltd. Hyderabad
15. M/s EMCO Ltd., Vadodara
16. M/s ASTER Ltd. Hyderabad
17. M/s EMC Ltd, Kolkata
18. M/s Sujana Metal Products Ltd., Hyderabad
19. M/s IVRCL Ltd., Nagpur
20. M/s BMW Industries Ltd., Kolkata
21. M/s BS Transcomm Ltd., Hydrabad
22. M/s Karamtara Engineering Pvt Ltd., Pune
23. M/s JHT Power Engineering Pvt. Ltd., Ahmedabad
24. M/s Aravali Infrapower Ltd., Bhagwanpur, Punjab
25. M/s Eros Infrastructure Pvt Ltd., Howrah
26. M/s Adhunik Power Transmission Ltd., Jamshedpur
27. M/s Mehrotra Engineering Works Pvt Ltd., Ahmedabad
28. M/s Shri Ashutosh Engineering Industries Ltd., Raipur
29. M/s Visha Engineers & Galvanisers Pvt Ltd., Ahmedabad
30. M/s Archon Engicom Pvt Ltd., Gandhinagar
31. M/s Poverage Towers Ltd., Dhar
32. M/s Sheetal Structurals Pvt. Ltd., Delhi (C/o Shyama Power India Ltd.)

(NOTE: Employer may accept other makes at his discretion, if, at the time of BID, the bidder seeks the approval of the same with all relevant documents of successful adoption of the same elsewhere to the satisfaction of the Employer**)**

ANNEX B

LIST OF STANDARDS & CODES RELATED TO TRANSMISSION LINE

The list of Standards and Codes given below (or latest version) shall be applicable for materials, process of manufacture, design, testing and erection of power transmission line, unless otherwise mentioned in the Specifications.

1.0 TOWER & TOWER ACCESSORIES

Sl.#	IS Standards	Title
1	IS 2-1960	Rules for rounding off numerical values
2	IS 209-1979	Specification for Zinc
3	IS 278-1978	Specification for Galvanized steel barbed wire for fencing
4	IS 432-1982	Mild steel & Medium tensile steel bars & hard drawn steel wire for concrete Reinforcement
5	IS 456-1978	Code of practice for plain & Reinforced concrete
6	IS 802 (Part-1)	Code of practice for the use of structural steel in overhead transmission line Towers: Material, Loads and permissible stresses
	Section-1-1995	Materials & Loads
	Section-2-1992	Permissible stress
7	IS 802 (Part II) Latest Edition	Code of practice for the use of structural steel in overhead transmission lines: Fabrication, galvanizing, inspection and packing
8	IS 802-(Part-III) Latest Edition	Code of practice for the use of structural steel in overhead transmission line: Testing
9	IS 808-1976	Specification for hot rolled steel beams, channels & Angle sections
	Part-V Part-VI	Equal Leg angles Unequal Leg angles
10	IS 1200-1974	Method of measurement of Building and civil works
11	IS 1367-1967	Technical supply conditions for threaded fasteners
12	IS 1573-1986	Specification for Electroplated coatings for zinc on iron and steel
13	IS 1893-1975	Criteria for earthquake resistant design of structures
14	IS 2016-1967	Specification for Plain washers
15	IS 2062-1992	Specification for steel for general purpose
16	IS 2551-1982	Danger Notice plates
17	IS 2629-1966	Recommended practice for hot dip galvanizing of iron and steel
18	IS 2633-1972	Method of testing uniformity of coating on zinc coated articles
19	IS 3063-1972	Specification for Single coil rectangular section spring washers for bolts, nuts and screws
20	IS 3757-1985	High strength structural bolts
21	IS 4091-1979	Code of practice for design and construction of foundations for transmission line towers and poles
22	IS 4759-1984	Specification for Hot dip zinc coating on structural steel and other allied products
23	Is 5358-1969	Specification for Hot dip galvanized coating on fasteners
24	Is 5613-1985	Code of practice for design, installation and maintenance of

Sl.#	IS Standards	Title
	(Part-2/Sec-1)	overhead power Lines : Designs
25	IS 5613-1985 (Part-2/Sec-2)	Code of practice for design, installation and maintenance of overhead power Lines : Installation and maintenance
26	IS 6610-1972	Specification for Heavy washers for steel structures
27	IS 6639-1972	Specification for Hexagonal bolts for steel structures
28	IS 6745-1972	Specification for Methods for determination of weight of zinc coating of zinc coated iron and steel articles
29	IS 7215-1974	Specification for Tolerance for Fabrication of steel structures
30	IS 8500-1992	Specification for welded structural steel (Medium and High Strength Quantity)
31	IS 10238-1982	Step bolts for steel structures
32	IS 12427-1988	Transmission tower bolts
33		Indian Electricity Rules, 1956
34	Publication No.19/N/700/1963	Regulation for electrical crossings for Railway tracks.

2.0 ERECTION, TESTING & COMMISSIONING

Except where otherwise specified or implied, the erection, testin,g and commissioning shall conform to the provisions of IS: 5613 (part 2 / Section-2) -1985 (as amended up to date).

3.0 MATERIALS & PROCESSES USED IN EXECUTING THE WORK

Sl.#	IS Standards	Title
1	IS: 383-1970	Course and Fine Aggregates from Natural Sources for Concrete
2	IS:1200-(Part I)-1974	Method of Measurement of Building and Civil Engineering Works: Earthwork
3	IS:456-1978	Code of Practice for Plain and Reinforcement Concrete
4	IS:2502-1963	Code of Practice for Bending and Fixing of Bars for Concrete Reinforcement
5	IS:3043-1966	Code of Practice for Earthing
6	IS:3764-1966	Safety Code for Excavation Work
7	IS:4081-1967	Safety Code for Blasting and Related Drilling Operation
8	IS:4091-1967	Code of Practice for Design and Construction of Foundations for Transmission Line Towers and Poles
9	IS:5613(Part2-1985)	Code of Practice for Design Installation and Maintenance of overhead power lines
10	IS: 269-1970	Specification for ordinary rapid hardening and low-heat Portland cement
11	IS: 383-1970	Specification for coarse and fine aggregate from natural sources for concrete

Except where otherwise specified or implied, the concrete shall conform to the provisions of IS:456-2000.

4.0 CONDUCTORS

Sl.#	IS Standards	Title	International Standards
1	IS:209-1979	Specification for Zinc	BS-3436-1961
2	IS:398-1996	Specification for aluminium conductors for Overhead Transmission purposes Part-II: Aluminium conductors galvanised steel reinforced	IEC-209-1966 BS-215 (Part-II) 1970
3	IS:1521-1972	Method of Tensile Testing of Steel Wire	ISO/R89-1959
4	IS:1778-1980	Reels and Drums for Bare Conductors	BS-1559-1949
5	IS:1841-1978	E.C.Grade Aluminium rod produced by rolling	
6	IS:2629-1966	Recommended practice for Hot Dip Galvanising of iron and steel	
7	IS:2633-1986	Method of testing uniformity of coating of zinc coated articles	
8	IS:4826-1968	Galvanised coatings on round steel wires	ASTM A472-729 BS-443-1969
9	IS:5484-1978	E.C.Grade Aluminium rod produced by continuous casting and rolling	
10	IS:6745-1972	Methods of determination of the weight of z coating	BS-443-1969
11	IS:8263-1976	Method of radio-interference tests on high voltage installations	IEC:437-1973 NEMA:107-1964

5.0 OPTICAL GROUND WIRE(OPGW)

Sl.#	Indian Standard	Title	International Standards
1		The International Telegraph and Telephone Consultative Committee (CCITT) Recommendations	G.652 D
2		International Electrotechnical vocabulary	IEC:50-1975
3		Optic Fibres Part 1: Generic specification	IEC: 793-1
4		Optic Fibre Cables Part-1: Generic specification	IEC: 794 – 1
5		Aluminium Alloy Redraw rods.	IEC: 104 – 1987
6		Aluminium-clad steel wires for electrical purposes	IEC: 1232-1993
7		Fibre Optic Test Procedure Series	EIA-RS-445 EIA-RS-455 (FOTP.S)

Sl.#	Indian Standard	Title	International Standards
8	IS: 2121	Specification for conductor and Earthwire Accessories for Overhead Power lines	
9		Standard construction of composite fibre optic Groundwire (OPGW) for use on electric utility power lines	IEEE P1138-1990
10	IS: 398	Standard conductor for overhead lines	IEC:1089 – 1993

6.0 INSULATOR & INSULATOR STRINGS & HARDWARE FITTINGS

Sl.#	IS Standards	Title	International Standards
1	IS 209-1966	Specification for Zinc	BS:3436-1986
2	IS 2071-1974	Method of high voltage testing, general definitions and test requirements: Part-I 1974 General Definitions and test requirements Part-II Test Procedure Part-III Measuring devices.	BS:137-1982 (I & II) IEC:274-1968 IEC:383-1993 (Parts I&II)
3	IS 731-1974	Porcelain insulators for overhead power lines with a nominal voltage greater than 1000V	IEC 383 -1993 (Part I&II)
4	IS:2121-1981	Specification for Conductors and earthwire accessories for overhead power lines Part-I : Armour Rods, Binding Wires and Tapes for Conductors Part-II: Mid-Span Joints and Repair Sleeves for Conductor	
5	IS:2486	Specification for Insulator Fittings for overhead power lines with a nominal voltage greater than 1000V Part-I:1971 General Requirements and Tests Part-II: 1974 Dimensional requirements Part-III: 1975 Locking Devices	IEC:120-1984 BS:3288-1979 IEC:372-1984
6	IS:2629-1985	Recommended practice for hot dip galvanising of iron and steel	
7	IS:2633-1986	Method for testing of uniformity of coating of zinc-coated articles	
8	IS:3138-1966	Hexagonal bolts and nuts	ISO/R947 ISO/R272
9	IS:3188-1980	Dimensions for disc insulators	IEC:305-1978

Sl.#	IS Standards	Title	International Standards
10	IS:4218-1976	ISO metric screw threads	ISO/R68-1969, R-26-1963,-1969, R965-1969
11	IS:6745-1972	Determination of weight of zinc coating on zinc-coated iron and steel articles	BS:433-1969 ISO:1460(E)
12	IS:8263-1976	Methods of RI test on HV insulators	IEC:437-1973 NEMA PUBLICATION NO.107/1964 CISPR
13	IS:8269-1976	Methods for switching impulse test on HV insulators	IEC:506-1975
14		Thermal mechanical performance test and mechanical performance test on string insulator units Sampling rules	IEC:575 IEC:591-1978
15	IS:6639-1972	Hexagonal bolts for steel structures	ISO/R272-1968
16		Ozone test on Elastomer	ASTM-D1171
17	IS:406	Methods of Chemical Analysis of Slab Zinc	

ANNEX C

SCHEDULE OF GUARANTEED TECHNICAL PARTICULARS (GTPs)

The Bidder shall fill up the Schedules for Guaranteed Technical Particulars (GTPs) for all items under each Schedule. The GTPs should also be provided in the prescribed formats in SOFT COPY also.

1. GTP OF GALVANISED STEEL TOWERS(GENERAL)			Bidder	
			Item No.	
Name and country of tower fabricator			1	
			2 (if any)	
Location of tower fabricating plants			1	
			2 (if any)	
Location of tower test facility				
Description		Applicable Standard		Make and country of origins
		Structural steel	High strength structural steel	
MATERIAL	Rolled shapes			
	Plates			
	Connection bolts & nuts			
	Lock nuts			
	U-bolts or shackles			
	Step bolts & nuts			
	Ladders			
	Spring washers			
GALVANISING	TOWER	Standard		
		Weight of zinc coating g/m^2	Thickness 6 mm and below	Thickness over 6 mm
			average…..minimum……	average…..minimum.
	BOLTS ,NUTS AND LOCK NUT	Standard		
		Weight of zinc coating g/m^2	average…..minimum……	average…..minimum.
		Method of coating for bolt	☐ hot-dipped ☐ other (state)……	
		Method of coating for nuts and lock nuts	☐ hot-dipped ☐ other (state)……	
		Retapping of nuts after galvanized	☐ yes ☐ no	
		Standard		

	SPRING WASHERS	Method of coating	☐ hot-dipped ☐ other (state)……	
		Weight of zinc coating g/m^2	Thickness≤4.76 mm	4.76mm≤thickness≤6.35mm
			average…..minimum……	average…..minimum.
D E SI G N	DESIGN METHOD	☐ Three –dimensional indeterminate method : Computer program …….. Developed by ……. ☐ Other method : …….		

	Bidder

1. GTP OF GALVANISED STEEL TOWERS (TOWER WEIGHT) **2. Indicate 66, 132 or 220kV :** **3. Indicate Single or Double Circuit Towers**	Item No.

TOWER TYPE	WEIGHTS IN KILOGRAMS												
	BASIC BODY	BODY EXTENSION					SINGLE LEG EXTENSION						
		3m	6m	9m	12m	15m	1.5m	3.0m	4.5m	6.0m			
B													
C													
D													
SP													
SB													
SC													
SD													
SSP													
TOTAL ESTIMATED WEIGHT TO BE SUPPLIED FOR THIS PROJECT													

Complete tower = Basic Body + Body Extension (if required) + 4 Leg Extensions (if required)
THIS SCHEDULE IS NOT APPLICABLE, WHERE THE TOWER DESIGN IS NOT IN BIDDER'S SCOPE.

	Bidder

2.GTP OF OVERHEAD CONDUCTOR		Item No.	
Make and Country of origin			
STRANDED WIRE	**Conductor Code Name**		
	Sectional area	Nominal mm^2	Calculated mm^2
	Steel strand	Number	Diam.mm
	Minimum breaking strength	Kg	
	Outside diameter	Mm	
	Standard weight	kg/km	
	Modulus of elasticity	Initial kg/mm^2	Final Kg/mm^2
	Coefficient of linear expansion	per ^{o} C	
	Lay ration and directed of lay		
COMPONENT WIRE	Diameter and tolerance	Mm	
	Ultimate tensile strength, average	kg/mm^2	
	Elongation in 610 mm	%	
	Galvanizing weight of zinc coating		
DRUM DETAILS	Reel designation		
	Reel capacity	m^3	
	Flange diameter	Mm	
	Drum diameter	Mm	
	Reel width	Inside mm	Outside Mm
	Arbor hole diameter	Mm	
	Thickness of lagging wood	Mm	
	Steel hub thickness	Mm	
	Steel strab width and thickness	mm x mm	
	Number and size of flange fixing bolts		
	Kind of wood and reservation	Kind of wood	Preservation
	Length per reel and tolerance	M	
	Weight of each reel and tolerance	Net Kg	Gross Kg

3.GTP OF OPTICAL GROUNDWIRE(OPGW)		Bidder Item No.	
Make and Country of origin			
OPGW	Standard according to which cable is manufactured		
	Method of manufacturing		
	Standard weight	kg/km	
	Minimum bending radius		
	No. of strands and diameter of individual strands		
	Conductor's Ultimate tensile stress	kg/mm^2	
	Conductor's Maximum tensile stress	kg/mm^2	
	Conductor's Everyday tensile stress at 32 °C	kg/mm^2	
	Maximum short time current rating	(kA for 1sec)	
	Ambient temperature rang		
	Fibre loss	(dB/km)	
	Splice loss	(dB)	
	Repair splice loss	(dB)	
	Cable attenuation end to end - 34.6 km	(dB)	
	Maximum fibre attenuation per km. at 1300 nm for temperature range 0°C to 60°C		
	Theoretical System loss for 1300 nm	(dB)	
	Optical fibre material		
	Cladding material		
	Diameter of fibre core	(mm)	
	Mode field diameter	(mm)	
	Coating material		
	Maximum dispersion per km.	(ps/nm/km)	
	Maximum numerical aperture at 1300 nm Bandwidth of optical fibre		
	Details of buffer fitting compound		
	Details of Tensile Strength Reinforcing		
	Core identification scheme and length marking		
DRUM DETAILS	Reel designation		
	Reel capacity	m^3	
	Flange diameter	Mm	
	Drum diameter	Mm	
	Reel width	Inside mm	Outside Mm
	Arbor hole diameter	Mm	
	Thickness of lagging wood	Mm	
	Steel hub thickness	Mm	

	Steel strab width and thickness	mm x mm	
	Number and size of flange fixing bolts		
	Kind of wood and reservation	Kind of wood	Preservation
	Length per reel and tolerance	M	
	Weight of each reel and tolerance	Net Kg	Gross Kg

	Bidder

4. **GTP OF INSULTATOR DISC**			Item No.	
Make and country of origin				
Type of insulator ☐ Porcelain ☐ Glass Ball and socket			ANSI class	ANSI class
Ref. Drawing No. and/or Catalog No.				
Disc outside diameter and tolerance		mm		
Unit spacing		mm		
Surface area of insulator	Top	cm^2		
	Bottom	cm^2		
Coupling type				
Leakage distance		mm		
Projected area		cm^2		
Combined mechanical and electrical strength		min.kg		
Mechanical impact strength		min m kg		
Tension proof test load		min.kg		
Time load		min.kg		
Low-frequency flashover voltage	Dry	kV		
	Wet	kV		
Critical impulse voltage	Positive	kV		
	Negative	kV		
Low-frequency puncture voltage		kV		
Low-frequency test voltage, rms to ground		kV		
Maximum RIV at 1,000 kHz		kV		
Steep front wave impulse	Positive	min.kV/ps		
	Negative	min.kV/ps		
Unit weight of disc		kg		
MATERIAL	Insulator shell			
	Cap and pin			
	Cotter key			
	Cement			
Galvanising weight of coating	Cap	$min.g/m^2$		
	Pin	$min.g/m^2$		
Glaze or insulator shell colour				
QUALITY CONFORMANCE	Combined mechanical and electrical test	X_L kg		
		S kg		
		X_L kV		

VAL UES	Puncture test	X kV		
		R kV		

5. **GTP OF INSULATOR STRINGS**		Bidder Item No.
S U	Make and country of origin	

SPENSIONINSULTAIONSTRING	Type of insulator strings		Single	By-pass	Double	V
	Ref. Drawing No. and/or Catalog No.					
	Working voltage	kV				
	Number of discs per string					
	Low-frequency flashover voltage	Dry kV				
		Wet kV				
	Critical impulse voltage (Positive wave)	kV				
	Arcing horn gap	mm				
	Breaking strength of complete set	kg				
	Weight of insulator set	kg				
TENSIONINSULATORSTRINGS	Make And country of origin					
	Type of insulator strings		Single	By-pass	Double	V
	Ref. Drawing No. and/or Catalog No.					
	Working voltage	kV				
	Number of discs per string					
	Low-frequency flashover voltage	Dry kV				
		Wet kV				
	Critical impulse voltage (Positive wave)	kV				
	Arcing horn gap	mm				
	Breaking strength of complete set	kg				
	Weight of insulator set	kg				
COUN	EQUIP	Make and country of origin				

TERWEIGHT	MENT	Type of counter weight	
		Ref. Drawing No. and/or Catalog No.	
		Overall height cm	
	COUNTERWEIGHT	Make and country of origin	
		Ref. Drawing No. and/or Catalog No.	
		Material	☐Galv. ☐ Concrete
			Cast Iron
		Diameter and thickness mmxmm	
		Weight per piece kg	

6.GTP OF VIBRATION DAMPER	Bidder	
	Item No.	Item No.
	Conductor	Earthwire (OPGW)
Maker and country of origin		
Ref. Drawing No. and/or Catalog No.		
Type of vibration damper		
Conductor diameter mm		
Total weight of each damper kg		
Diameter of weights mm		
Length of weights mm		

Weight of weights	kg		
Tolerance in weights	%		
Slip strength of steel messenger wire	kg		
Frequency response range of the damper	c/s		
Peak natural resonant frequency of the damper			
a) upper	c/s		
b) lower	c/s		
Free loop length	m		
at a) wind velocity	m/s		
b) tension in conductor	kg		
c) temperature	^{o}C		
Maximum safe bending amplitude peak to peak			
a) for the conductor	mil		
b) for vibration damper clamp	mil		
Maximum bending			
for the conductor with damper(s)	mil		

NUMBER AND LOCATION OF DAMPER(S)

1. **ACSR TWIN MOOSE Conductor(For 400kV lines)**

NUMBER AND LOCATION OF DAMPER(S) PER SPAN			
	Type of span		
	Suspension-Suspension	Suspension-Tension	Tension-Tension

Span (m)	No's	Location	No's	Location	No's	Location

2. **ACSR ZEBRA Conductor(For 220kV Lines)**

NUMBER AND LOCATION OF DAMPER(S) PER SPAN						
Span (m)	Type of span					
	Suspension-Suspension		Suspension-Tension		Tension-Tension	
	No's	Location	No's	Location	No's	Location

3. **ACSR PANTHER Conductor(For 132kV lines)**

NUMBER AND LOCATION OF DAMPER(S) PER SPAN	
	Type of span

Span (m)	Suspension-Suspension		Suspension-Tension		Tension-Tension	
	No's	Location	No's	Location	No's	Location

4. **ACSR WOLF Conductor(For 66kV lines)**

NUMBER AND LOCATION OF DAMPER(S) PER SPAN						
Span (m)	Type of span					
	Suspension-Suspension		Suspension-Tension		Tension-Tension	
	No's	Location	No's	Location	No's	Location

5. **OPTICAL GROUNDWIRE (OPGW)**

NUMBER AND LOCATION OF DAMPER(S) PER SPAN						
Span (m)	Type of span					
	Suspension-Suspension		Suspension-Tension		Tension-Tension	
	No's	Location	No's	Location	No's	Location

Notes :

1. Location is to specify the suspension end or the tension end of the span in which the vibration damper is installed.
2. The number of vibration dampers to be installed meet the requirement in the Specifications.

7.GTP OF EARTHING MATERIAL		Bidder
		Item No.
ST AN DA	Make and country of origin	

RD GR OU ND RO D	Nominal size and length	16mmx18m	19mmx18m	16mmx3.0m	19mmx3.0m
	Drawing No. and/or catalog No.				
	Material				
	Method of production	☐ Molten-welded ☐ Electro-deposited		☐ Molten-welded ☐ Electro-deposited	
	Thickness of coating and tolerance mm				
	Outside diameter and tolerance mm				
	Length and tolerance mm				
SE CTI ON AL GR OU ND RO D	Make and country of origin				
	Nominal size and length	16mmx18m	19mmx18m	16mmx3.0m	19mmx3.0m
	Drawing No. and/or catalog No.				
	Material				
	Method of production	☐ Molten-welded ☐ Electro-deposited		☐ Molten-welded ☐ Electro-deposited	
	Thickness of coating and tolerance mm				
	Outside diameter and tolerance mm				

	Length and tolerance mm					
	Drawing No. and/or Catalog No.of coupling					
	Weight per piece					
GROUND ROD CLAMP	Make And country of origin					
	Drawing No. and/or Catalog No.					
	Type of clamp					
	Material	Clamp				
		U-bolt and nut				
GROUND CONNECTOR	Make And country of origin					
	Drawing No. and/or Catalog No.					
	Type of connector					
	Material	Connector body				
		Bolt and nut				
GROUND CONNECTRING AND COUNTERPOISE	STRANDED WIRE	Make and country of origin				
		Nominal size and stranding				
		Material				
		Conductivity %IACS				
		Length per reel and tolerance m				
		Weight per reel and tolerance kg				
	SOLID WIRE	Make and country of origin				
		Nominal size and stranding				
		Material				
		Conductivity %IACS				
		Length per reel and tolerance m				
		Weight per reel and tolerance kg				

GROUND ROD DRIVING EQUIPMENT	Make and country of origin	
	Drawing No. and/or Catalog No.	

ANNEX D

Tentative tower numbers and tower types prepared based on the walk-on-survey report showing tower number, descriptions, tower types and spans are given below:

Sl#	Tower Location No	Tower Type	Span (m)
1	SD-01	DD+9	293.027
2	SD-02	DD+9	159.931
3	SD-03	DD+9	136.059
4	SD-04	DB+9	260.377
5	SD-05	DD+9	583.967
6	SD-06	DD+9	378.6
7	SD-07	DD+6	180.044
8	SD-08	DB+3	245.986
9	SD-09	DB+6	275.525
10	SD-10	DC+9	429.162
11	SD-11	DD+9	278.297
12	SD-12	DC+9	217.451
13	SD-13	DB+3	122.801
14	SD-14	DD+9	590.905
15	SD-15	DD+9	191.651
16	SD-16	DC+3	187.878
17	SD-17	DC+3	233.054
18	SD-18	DD+9	629.985
19	SD-19	DD+9	383.6
20	SD-20	DB+3	210.459
21	SD-21	DC+9	449.004
22	SD-22	DC+9	448.743
23	SD-23	DD+9	445.166
24	SD-24	DD+9	376.065
25	SD-25	DC+3	236.985
26	SD-26	DD+6	394.899
27	SD-27	DD+9	661.527
28	SD-28	DD+9	154.987
29	SD-29	DDS+9	782.679
30	SD-30	DDS+9	222.146
31	SD-31	DB+9	253.527
32	SD-32	DB+9	142.762
33	SD-33	DC+3	237.672
34	SD-33/1	DB+3	254.244
35	SD-34	DC+6	482.034
36	SD-35	DD+9	221.653

37	SD-36	DC+3	162.856
38	SD-37	DB+3	262.488
39	SD-38	DD+0	84.291
40	SD - 39	DD+6	

Here:

DB, DC, DD, and SP refer to Double Circuit Type B tower, Type C tower, Type D tower, and Special towers, respectively.

The addition of 'S' (e.g., DBS, DCS, DDS) indicates a strengthened version of the respective tower type, designed for higher mechanical loading.

The '+' followed by a number (e.g., DB+0, DD+6, DC+9) denotes the leg extension in meters, used to achieve required ground clearance or terrain adjustment.

CHAPTER 12
SECTION – I
TECHNICAL SPECIFICATIONS FOR 66 kV XLPE POWER CABLE

1.1 INTRODUCTION

Bhutan Power Corporation Ltd. (BPC) intends to construct a 1x66kV double circuit from Semtokha substation to Dechencholing Substation (Loop-in loop-out (LILO) of existing 66 kV Dechencholing-Damji Line), along with necessary line termination works including supply of cables and construction of cable trenches, at Semtokha substation in Thimphu Dzongkhag, Bhutan. Line termination inside the substation would be at 66 kV voltage level through 1R/Ph, 1Cx630sq.mm XLPE Al cable with bonding arrangement.

Overall project including design, engineering, manufacture, testing, packing, and supply of 66 kV, 630 Sq.mm, Al, XLPE, insulated power cable and all the necessary accessories required for bonding arrangements.

1.2 SCOPE:

The scope under this section covers design, engineering, manufacture, testing, packing, supply of 66 kV, 630 Sq.mm, Al, XLPE, insulated power cable and all the necessary accessories required for bonding arrangements.

The XLPE cable and its accessories shall be complete with all fittings and components necessary for satisfactory performance and ease of maintenance. List of Approved Cable Makes provided in Appendix -2.

STANDARDS

Unless otherwise specified, the cables shall conform, in all respects, to IEC-502, IEC-60840 and IS: 7098 (Part-III)/ with latest amendment or latest edition for cross linked polyethylene insulated Thermoplastic High Density Polyethylene sheathed cable for working voltage of 66 kV.

1.3 CLIMATIC CONDITIONS

The climatic conditions under which the cable shall operate satisfactorily are as follows:

1	Ambient temperature	Min: 0 deg.C Max: 40 deg.C
2	Maximum relative humidity	20-100%
3	Average annual Isokeraunic level	70 Thunderstorm Days
4	Average annual rainfall	75-500 mm
5	Wind Speed	47m/s
6	Altitudes above sea leave	Approx 2500m
7	Seismic acceleration level	Horizontal:0.1g Vertical:0.05g

8	Climate	The summer is moderately hot and winter is dry and cold

1.4 PRINCIPAL PARAMETERS

66 kV XLPE single core power cable of single length, with aluminum conductor, shielded with extruded semi-conducting layer, insulated with dry gas cured cross linked polyethylene (XLPE) insulation, insulation screened with extruded semi-conducting layer followed by semi-conducting non-woven water swellable tape, insulated core copper-wire, screened (suitable for 40 kA for 1 sec) tapped with a combination of semi-conducting water swellable and poly aluminum laminated followed by black extruded Thermoplastic HDPE (Poly-ethylene) inner sheath. Aluminum corrugated armored (suitable for 40 kA for 1 sec) and graphite coating Thermoplastic HDPE outer sheathed overall cable, confirming to IEC-60840 for construction, and confirming to IS: 7098 (Part-III)/or any latest amendments thereof.

1.4.1 Outer sheathing should be designed to afford high degree of mechanical protection and should also be heat, oil chemicals and weather resistant. Common acid, alkalis and saline solution should not have adverse effect on the Thermoplastic HDPE sheathing material used.

1.4.2 The cable should be suitable for laying in covered trenches and/or underground for outdoor.

1.4.3	**CABLE PARAMETERS**	**66kV**
i.	Voltage grade (U)kV	66
ii.	No. of cores	Single
iii.	Highest system voltage kV	72.5
iv.	Size (mm^2)	630
v.	System Frequency Hz	50
vi.	Variation in frequency	±5 %
vii.	Minimum fault level individually for:	
viii.	Maximum allowable temperature	
ix.	a) Design continuous operation at rated full load current, the max. temperature of the conductor shall not exceed	90 deg.C
	b) The conductor temperature after short circuit for 0.5s shall not exceed	250 deg. C

x.	Basic insulation level. (1.2 / 50 Micro second wave)	325kvp
xi.	1-min. power frequency withstand voltage (rms,wet)	140kV
xii.	System Earthing	Solidly Grounded

1.5 GENERAL TECHNICAL REQUIREMENTS:

1.5.1 CONDUCTOR

The cable conductor shall be made from stranded aluminum to form compact circular shaped conductor having resistance within limits specified in IS: 8130 / and any amendment thereof. The conductor shall confirm to IEC: 228 and the shape shall be compacted circular shaped.

1.5.2 CONDUCTOR SCREEN

The conductor having a semi-conducting screen shall ensure perfectly smooth profile and avoid stress concentration. The conductor screen shall be extruded in the same operation as the insulation; the semi-conducting polymer shall be cross-linked.

1.5.3 INSULATION

The XLPE insulation should be suitable for specified 66 kV system voltage. The manufacturing process shall ensure that insulations shall be free from voids. The insulation shall withstand mechanical and thermal stress under steady state and transient operating conditions. The extrusion method should give very smooth interface between semi-conducting screen and insulation. The insulation of the cable shall be of high standard quality, generally confirming to IEC-60840 and I.S. 7098 part-III / (latest edition).

1.5.4 INSULATION SCREEN

To confine electrical field to the insulation, non- magnetic semi-conducting shield shall be put over the insulation. The insulation shield shall be extruded in the same operation as the conductor shield and the insulation by triple extrusion process.

1.5.4.1 A semi-conducting non-woven water blocking tape shall be provided over the extruded semi conducting layer and over the copper wire metallic screen.

1.5.4.2 To avoid the ingress of moisture, poly-aluminum laminate tape shall be applied longitudinally with suitable overlap.

1.5.5 INNER-SHEATH

The sheath shall be suitable to withstand the site conditions and the desired temperature. It should be of adequate thickness, consistent quality and free from all defects. The sheath shall be extruded and of black Thermoplastic HDPE (Polyethylene).

1.5.6 ARMOUR

Aluminum corrugated armoring shall be provided.

1.5.7 OUTER SHEATH

Extruded Thermoplastic HDPE outer sheath confirming to IEC: 502/ latest edition/amendment shall be applied over armoring with suitable additives to prevent attack by rodents and termites. The outer sheath shall be coated with graphite throughout the length of cable.

1.5.8 CONSTRUCTION

All materials used in the manufacture of cable shall be new unused and of finest quality. All materials should comply with the applicable provision of the tests of the specification. IS, IEC, IEEE, and any other applicable statutory provisions rules and regulations.

1.5.9 CURRENT RATING

The cable will have current ratings and de-rating factors as per relevant IS/IEC standard.

1.5.9.1 The one-second short circuit current rating values each for conductor, screen armour shall be furnished and shall be subject to the purchaser's approval.

1.5.9.2 The current ratings shall be based on maximum conductor temperature of 90 deg.celcius with ambient site condition specified for continuous operation at the rated current.

1.5.10 OPERATION

1.5.10.1 Cables shall be capable of satisfactory operation under a power supply system frequency variation of ±5% voltage variation of ±10 % and combined frequency voltage variation shall be +10 % & - 15%.

1.5.10.2 Cable shall be suitable for laying in **Ducts/Trench.**

1.5.10.3 Cable shall have heat and moisture resistance property.

1.5.11 LENGTHS

The cable shall be supplied in approved drum length.

1.5.12 INDENTIFICATION MARKING

Identification of cables shall be 'provided externally at three meters' intervals to identify as under.

I. Name of manufacture
II. Per meter marking
III. Year of Manufacture
IV. Voltage grade to be embossed at the interval of three meter-length. The identification, by embossing shall be done only on the outer sheath. The name of the purchaser shall also be embossed.

1.5.13 QUALITY ASSURANCE DOCUMENTS

The supplier would be required to submit all the Quality Assurance Documents for approval prior to commencement of manufacturing activities.

1.6 TESTING & INSPECTION

1.6.1 The bidders shall furnish copies of the relevant type test of cable offered along with the bid. The test reports submitted shall be of the tests conducted within the last 10 (ten) years as on the date of bid opening. In case the test reports are of the test conducted earlier than 10 (ten) years as on the date of bid opening, the supplier shall repeat these test(s) at no extra cost to the Purchaser. Cable being supplied shall conform to type tests as per technical specification and shall be subject to routine tests. The purchaser reserves the right to witness any or all the type tests. The Supplier shall intimate the Purchaser the detailed program about the tests at least 1 (one) week in advance.

1.6.2 The reports for all type tests as per technical specification and relevant standards shall be furnished by the Supplier along with equipment/ material drawings. The type tests conducted should have either been conducted in accredited laboratory (accredited based on ISO / IEC Guide 25/ 17025 or EN 45001 by the national accreditation body of the country where laboratory is located) or witnessed by the representative(s) of Purchaser or Utility. In the event of any discrepancy in the test reports i.e. any test report not acceptable due to any design/manufacturing changes (including substitution of components) or due to non-compliance with the requirement stipulated in the Technical Specification or any/all additional type tests not carried out, same shall be carried out without any additional cost implication to the Purchaser.

1.6.3 TESTS

1) ACCEPTANCE AND ROUTINE TEST

All acceptance and routine tests as stipulated in the IEC-60840 and IS: 7098 (Part-III) / shall be carried out by the supplier in the presence of purchaser's representative. Sample shall be selected from offered lot, for not less than 10% (Ten percent) of nos. of cable drums. For conducting acceptance tests the next highest whole number shall be considered.

1.7 DOCUMENTATION

1.7.1 LIST OF DRAWINGS AND DOCUMENTS

The Bidder shall furnish one set of following documents along with his offer. The sectional view drawing shows general constructional features of power cable with details of materials/ conductor/ conductor screen / XLPE insulation / water swellable tape / Al. armouring/HDPE sheath etc.

a) Literature for offered items.

b) Type test reports

1.8 PACKING AND FORWARDING

1.8.1 The cable shall be packed in steel drums suitable for vertical/horizontal transport as the case may be, and suitable to withstand handling during transport and outdoor storage during transit. The supplier shall be responsible for any damage to the items during transit, due to improper and inadequate packing. Wherever necessary, proper arrangement for lifting shall be provided.

Each consignment shall be accompanied by a detailed packing list containing the following information:

i. Name of the consignee

ii. Details of consignment

iii. Destination

iv. Total weight of consignment

v. Handling and unpacking instructions

vi. Bill of material indicating contents of package

1.11 TECHNICAL & GUARANTEED PARTICULARS

The Bidder shall furnish guaranteed technical particulars as called for in appendix-1 (Schedule-A) of this specification. Particulars, which are subject to guarantee, shall be clearly marked.

SECTION – 2

SPECIFICATION FOR CABLE TERMINATION ACCESSORIES

2.1 SCOPE:

2.1.1 This section covers the scope of general technical requirement of the 66 kV cable associated end termination kits, end termination connections, straight through joints, bonding cable, and accessories.

2.2 CABLE JOINTING ACCESSORIES (KITS):

2.2.1 66 kV XLPE cable accessories shall be suitable for the specified size of the cable. The terminating kits shall be suitable for termination of the cables for outdoor installation.

2.2.2 66 kV outdoor type heat shrink termination kit should be provided (refer to BOQ).

2.2.3 Cable end termination accessories (kits) shall be suitable for tropical climatic conditions as specified in section I.

2.2.4 The particulars of requirement of electrical performance of termination shall be suitable for power cable of specification mentioned in section I.

2.2.5 The end termination arrangement shall be of outdoor antifog type and shall be complete with all accessories, including conductor fittings, insulating, sealing, consumable items, filling materials, creepage extenders (skirts) and terminal studs etc. complete.

2.2.6 The kits must eliminate all disadvantages normally encountered in resin-based termination and jointing system i.e. shelf life limitations, health hazards, delay in curing.

2.2.7 These shall be weather resistant and should withstand the long-term weather effects either due to rain-polluted atmosphere or by heavily industrial and saline polluted atmosphere.

2.2.8 Suitable size of the kit shall be stated in case a particular size of cable kit does not confirm to the size of cable.

2.2.9 (a) The joints and termination shall have suitability to adopt the most suitable bonding arrangement including but not limited to link boxes with and without Sheath Voltage Limiters (SVL), Earth Continuity Conductor (ECC), etc. as per the latest IS/IEC/IEEE standards (refer to figure 1, 2, & 3).

b) The successful bidder shall have to submit technical details along with the connection diagram, details of link boxes with and without SVL, etc. during detail engineering.

c) The connecting cable from end terminations to link boxes shall be laid in heavy duty PVC / Polyethylene pipes at minimum depth of 1 meter from road level. (NA)

d) The link box shall be installed on structure OR pillar. The box shall be easily accessible for maintenance purpose in whether proof masonry manhole boxes. (NA)

e) The link boxes should be dustproof and weatherproof.

2.2.10 The Bidder shall furnish the detailed guaranteed technical Particulars of the accessories like termination kits offered by them in the prescribed format. Any additional details, if desired, shall also be submitted in the offer.

2.2.11 TYPE TESTS ON CABLE ACCESSORIES

The bidder shall submit the following type test in sequence for joints and termination as per IEC 60840.

2.3 TECHNICAL & GUARANTEED PARTICULARS

The Bidder shall furnish guaranteed technical particulars as called for in Appendix-I (Schedule-B) of this specification. Particulars, which are subject to guarantee, shall be clearly marked.

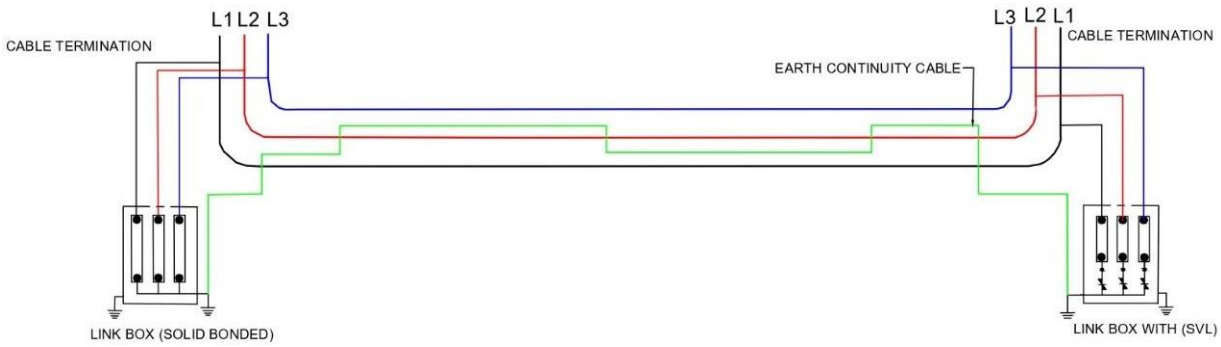

Figure 1: Typical Representation of Single-Point Bonded Cable System up to 1 km.

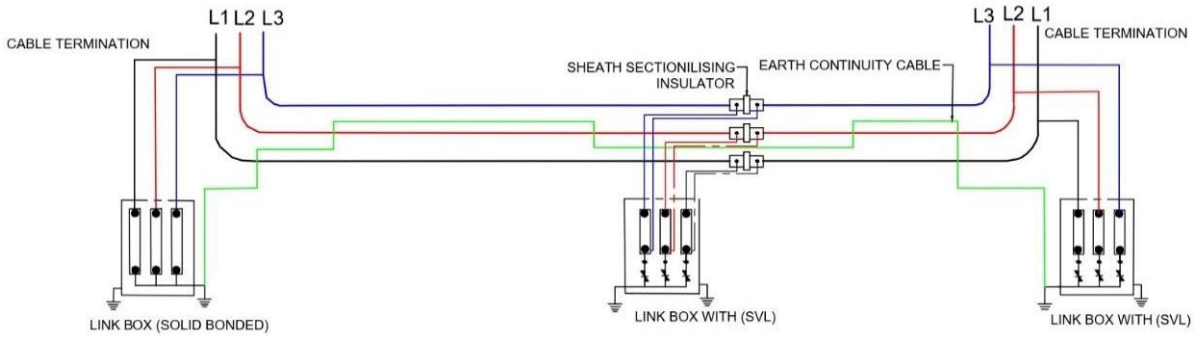

Figure 2: Typical Representation of Sectionalized Single-Point Bonded Cable System from 1 km to 2 km.

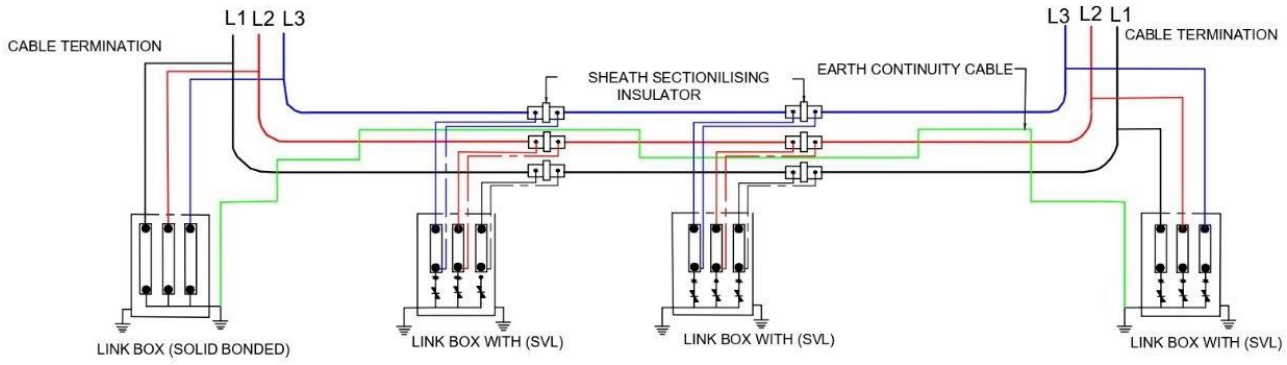

Figure 3: Typical Representation of Sectionalized Single-Point Bonded Cable System above 2 km.

Appendix-I

SCHEDULE 'A'
GUARANTEED TECHNICAL PARTICULARS FOR POWER CABLES

Sr.No.	Particulars	66kV x 1C x 630 sq.mm
1	**GENERAL**	
1.01	Name of the supplier, if any	
1.02	Specifications and standards	
1.03	Specifications and standards (deg.C)	
2.00	**CABLE**	
2.01	Name of The Manufacturer	
2.02	Place of Manufacturer	
2.03	Cable type	
2.04	Applicable specifications and standard	
2.05	Voltage Grade	
2.06	No.of Cores and size (Nos.)	
2.07	Suitable for neutral earthed / unearthed system	
2.08.a	Describe technique for conductor screen, insulation and insulation screen	
2.08.b	Permissible voltage and frequency variation for Continuous current Carrying capacity in Amp.	
2.09	Continuous current carrying capacity in Amp.	
2.09.01	For site conditions :	
	1. Air (A)	
	2. Ground (A)	
	3. In Duct (A) at 30 Deg.C	
	4. In Trench (A)	
2.09.02	De-rating factors, for various conditions of laying , are not worse than those specified in applicable IS/IEC	
	De-rating factor for fire resistance treatment	
2.10	**CONDUCTOR:**	
2.10.01	Material	
2.10.02	Shape of conductor	

2.10.03	Nominal cross section area (sq.mm)	
2.10.04	Number of wires (Nos.)	
2.10.05	Diameter of each wire (mm)	
2.10.06	Diameter of conductor (mm)	
2.10.07	Current carrying capacity	
	(a) On continuous basis	
	(b) S.C. Current for 1 sec basis (kA)	
2.11.00	**CONDUCTOR SCREENING**	
2.11.01	Type	
2.11.02	Material	
2.11.03	Continuous working temp. (°C)	
2.11.4	Minimum Thickness (mm)	
2.11.5	Maximum allowable temperature at termination of short circuit (°C)	
2.12.00	**INSULATION**	
2.12.01	Material	
2.12.02	Thickness of insulation	
	(1) Between cores (mm)	
	(2) Between cores and inner sheath (mm)	
2.12.03	Tolerances on thickness (percent) of insulation	
2.12.04	Diameter of core over insulation (mm)	
2.12.05	Specific insulation (ohm-cm) resistance at ninety (90) degrees centigrade	
2.12.06	Whether XLPE insulation dry gas cured or not	
2.13.00	**INSULATION SCREENING**	
2.13.01	Material	
2.13.02	(1)Thickness of extruded semi conducting	
	(2) Details of semi conducting water swellable tapes applied over core to be given	
	(3) Thicknesses of copper woven tapes (mm)	
	(4) Total thickness of tapes	
2.13.03	Diameter of cable over screen mm	
2.13.04	Whether insulation screen is removable without	

	application of heat	
2.14.00	**METALLIC SHEATH:**	
2.14.01	Material	
2.14.02	Type (seam weld / seamless (extruded)) (annular / spiral) (for reference)	
2.14.03	Thickness of metallic sheath (nom./min.) mm	
2.14.04	Current carrying Capacity of Aluminium sheath (a) On continuous basis (b) S.C. Current for 1sec basis(kA)	
	For corrugated aluminum sheath i. Approx. Height of corrugation	
	ii. Approx. Pitch of corrugation	
	iii. Diameter of cable over trough	
	iv. Diameter of cable over gap	
	v. Nominal cross section area	
2.14.06	Filler Material	
2.15.00	**OUTER SHEATH:**	
2.15.01	Material	
2.15.02	Thickness of sheath (mm)	
2.15.03	Tolerance on thickness (mm)	
2.15.04	Overall diameter of cable (mm)	
2.16.00	Short circuit withstand capacity of offered cable	
2.16.01	Short circuit current (kA)	
2.16.02	Duration of short circuit (sec)	
2.17.00	Allowable/ attainable maximum conductor temperature (°C) when carrying continuous currents as per item 2.09.00 above	
2.18.00	Allowable/ attainable maximum conductor temperature (°C) at the termination of short circuit current as per item 2.19.00 above	
2.19.00	**CABLE CONSTANTS:**	
2.19.01	DC Resistance at 20 (twenty) degrees centigrade (ohm/km)	
2.19.02	AC Resistance at operating temperature (ohm/km)	

2.19.03	Loss tangent	
2.19.04	Dielectric constant	
2.20.00	Maximum cable charging current at normal operating voltage (Amp/km)	
2.21.00	Permissible overload capacity of cable	
	a) Conductor temperature	
	b) Ampere	
	c) Duration	
2.22.00	Are the offered 1 core cable guaranteed to perform satisfactorily under installation conditions specified in above sections. If yes, furnish relevant calculations.	
	(a) Induced voltage in the Aluminium sheath when	
	(1) Cable carrying rated load (Volts/km)	
	(2) Cable carrying SC current of 1 kA (Volts/km)	
2.23.00	Recommended minimum bending radius (mm)	
2.24.00	Safe pulling force (kg)	
2.25.00	Cable weight (kg/km)	
2.26.00	Length of cable per drum (mm)	
2.27.00	**CABLE DRUM:**	
2.27.01	Net weight (kg)	
2.27.02	Drum weight (kg)	
2.27.03	Shipping weight (kg)	
2.27.04	Marking on Outer Sheath	

Appendix-I

SCHEDULE 'B'
GUARANTEED TECHNICAL PARTICULARS FOR POWER CABLE ACCESSORIES

Sr. No.	Particulars	66 kV
1	Name of Manufacturer	
2	Applicable Standards	
3	Nominal System Voltage	
4	Highest System Voltage	
5	Impulse Voltage at 95 to 100°C temperature	
6	Frequency	
7	AC High Voltage withstand test 15 min dry	
8	Partial Discharge Test at Ambient Pre-Stressed at 1.75U_0 (67kV) 10sec Measured at 1.5U_0 (57kV)	
9	Partial Discharge Test at Elevated (95-100°C) Pre-Stressed at 1.75U_0 (67kV) 10sec Measured at 1.5U_0 (57kV)	
10	Heating Cycle Voltage Test	
	a) Total Duration of one cycle	
	b) Duration of Heating period	
	c) Duration of natural cooling period	
	d) Temp. of conductor during heating	
	e) AC voltage applied during test	
	f) No. of cycles	
11	Short Circuit Current	
12	Creepage (outdoor)	
13	Shelf life	
14	Allowable kit storage temperature	
15	Accessories	
16	Method of Stress Control	
17	Tubing's & Molded parts	
18	Non-Tracking material	
19	Di-electric strength of insulating material	

Appendix-I

SCHEDULE 'C'
GUARANTEED TECHNICAL PARTICULARS FOR EARTHING CABLE

Sr. No.	Particular	
1	Name of Manufacturer	
2	Type of Cable	
3	Voltage Grade	
4	Reference Standard	
5	No. of Core & Size	
6	Conductor	
6.1	Material	
6.2	Nominal Cross Section Area	
6.3	Form of conductor	
6.4	Max. DC Resistance of conductor at 20 degree C.	
7	Conductor Screening	
7.1	Material	
7.2	Nominal Thickness	
8	Insulation	
8.1	Material	
8.2	Nominal Thickness	
9	Insulation Screening	
9.1	Non metallic	
9.2	Material	
9.3	Nominal Thickness	
9.4	Metallic	
9.5	Material	
9.6	Minimum Diameter / Thickness in mm	
10	Outer Sheath	
10.1	Material	
10.2	Nominal Thickness	
11	Electrical Parameters	
11.1	Short Circuit rating for 1 sec.	
11.2	Continuous current rating in Air / Ground	
11.3	Appx. Overall diameter in mm	
11.4	Appx. Weight in kg/km	
11.5	Embossing on Outer Sheath	
12	Applicable Acceptance Tests	

Appendix 2

LIST OF APPROVED MAKES

1. HT CABLES

1.1 M/s RPG CABLES	INDIA
1.2 M/s LS CABLES LTD	INDIA
1.3 M/s TENGA CABLE INDUSTRIES	MALAYSIA

2. EHV CABLES

2.1 M/s RPG CABLES	INDIA
2.2 M/s LS CABLES LTD	INDIA

3. TERMINATION KITS

3.1 M/s 3M ELECTRO & COMMUNICATION	INDIA
3.2 M/s RAYCHEM	INDIA
3.3 M/s NEXAN/ EURO MOULD	EUROPE

CHAPTER 13 SURGE ARRESTERS (TLA)

1.0 GENERAL

1.1 The Surge Arresters shall conform to IEC: 60099-4 except to the extent modified in the specification and shall also be in accordance with requirements under Project Description.

1.2 Arresters shall be of hermetically sealed units, self supporting construction, suitable for mounting on tubular support structures to be supplied by the Contractor.

1.3 The Surge Arresters shall be designed for use in the geographic and meteorological conditions as given in the Project Description. Surge arrestors shall be suitable for installation at a given altitude and shall be altitude corrected.

2.0 DUTY REQUIREMENTS

(a) The surge arresters shall be of heavy-duty station class and gapless type without any series or shunt gaps.

(b) The surge arresters shall be capable of discharging over-voltages occurring during switching of unloaded transformers, reactors and long lines.

(c) 72.5 kV class arrester shall be capable of discharging energy equivalent to class 3 of IEC.

(d) The surge arresters shall be suitable for withstanding forces.

(e) The reference current of the arresters shall be high enough to eliminate the influence of grading and stray capacitance on the measured reference voltage.

(f) The surge arresters shall withstand lightning impulse withstand voltage (LIWL) corresponding to 72.5kV (± 325kVp).

(g) The duty cycle of CBs installed in the system of the Purchaser shall be O - 0.3 sec – CO - 3 min - CO. The Surge Arrester shall be suitable for such circuit breaker duties in the system.

3.0 CONSTRUCTIONAL FEATURES

The features and constructional details of surge arresters shall be in accordance with requirement stipulated hereunder:

(a) The non-linear blocks shall be of sintered metal oxide material. These shall be provided in such a way as to obtain robust construction, with excellent mechanical and electrical properties even after repeated operations.

(b) The surge arresters shall be fitted with pressure relief devices suitable for preventing shattering of porcelain housing and providing path for flow of rated fault currents in the event of arrester failure. Details shall be furnished in the bids along with quality checks.

(c) The arresters shall not fail due to arrester porcelain contamination.

(d) Seals shall be provided in such a way that these are always effectively maintained even when discharging rated lightning current.

(e) Outer insulator shall be porcelain/polymer. The terminal connectors shall be feed through screw clamp type.

Housing shall be so coordinated that external flashover will not occur due to application of any impulse or switching surge voltage up to the maximum design value for arrester.

(f) The end fittings shall be made of corrosion proof material and preferably be nonmagnetic.

(g) The name plate shall conform to the requirements of IEC incorporating the year of manufacture.

(h) The heat treatment cycle details along with necessary quality checks used for individual blocks along with insulation layer formed across each block are to be furnished. Metalizing coating thickness for reduced resistance between adjacent discs is to be furnished with additional information schedule of bid proposal sheets along with procedure for checking the same. Details of thermal stability test for uniform distribution of current on individual disc is to be furnished.

(i) The manufacturer will submit Data for rejection rate of ZnO blocks during manufacturing/operation for the past three years.

4.0 FITTINGS AND ACCESSORIES

(a) Arresters shall be complete with insulating base having provision for bolting to flat surface of structure.

(b) Self contained discharge counters, suitably enclosed for outdoor use and requiring no auxiliary or battery supply for operation shall be provided for each single pole unit along with necessary connection. Suitable leakage current meters should also be supplied within the same enclosure. The reading of milliammeter and counters shall be visible through an inspection glass panel. The terminals shall be robust and of adequate size and shall be so located that incoming and outgoing connections are made with minimum possible bends. The design of the surge monitor shall be such that it is possible to tilt the surge monitor downwards by an angle of up to 45 degrees from Horizontal plane.

(c) Microprocessor-based instruments for monitoring resistive current or wattloss of the arrester shall have to be supplied, if required.

(d) Surge monitor consisting of discharge counters and milliammeters should be suitable to be mounted on support structure of the arrester and should be tested for IP55 degree of protection. The standard supporting structure for surge arrester should be provided with a mounting pad, for fixing the surge monitor. The surge monitor should be suitable for mounting on this standard mounting pad.

(e) Grading/corona rings shall be provided on each complete arrester unit as required.

5.0 TESTS

5.1 The surge arresters should have been type tested as per IEC/IS and shall be subjected to routine and acceptance tests in accordance with IEC document. In the switching surge operating duty test, the samples shall be pre-heated to 70 deg. C, (instead of 60 deg. C. as given in IEC) prior to application of long duration surges for contamination test procedures outlined in ANSI : 062-11-1987 may be followed until IEC brings out alternate test procedure for the same.

The test reports of the type tests shall be submitted for the Purchaser's review.

5.2 (a) **Acceptance Tests**

(1) Measurement of power frequency reference voltage of the arrester units.

(2) Lightning Impulse Residual voltage on arrester units (IEC clause 6.3.2).

(3) Internal Ionisation or partial Discharge test.

(b) **Special Acceptance Test**

(1) Thermal stability test on three sections (IEC Clause 7.2.2).

(2) Aging & Energy Capability test on blocks (procedure to be mutually agreed).

(3) Wattloss test.

(c) **Routine Tests**

(1) Measurement of reference voltage.

(2) Residual voltage test of arrester unit.

(3) Internal Ionisation test or partial discharge test.

(4) Sealing test.

(5) Verticality checks on completely assembled Surge arresters as a sample test on each lot.

(d) **Test on Surge Monitors**

The Surge monitors shall also be connected in series with the test specimens during residual voltage and current Impulse withstand tests to verify efficacy of the same. Additional routine/ functional tests with one 100A and 10kA current impulse, (8/20 micro sec.) shall also be performed on the Surge monitor.

(e) **Test on insulators**

All routine tests shall be conducted on the hollow column insulators as per IEC – 60233.

6.0 SPARE PARTS AND MAINTENANCE EQUIPMENT

The requirement of spares is detailed in Price schedule.

7.0 TECHNICAL PARAMETERS

(A) (A) 72.5kV CLASS SURGE ARRESTER

a)	Rated arrester voltage	60 kV
b)	Nominal discharge	10 kA of 8/20 microsecond wave
c)	Minimum discharge Capability	7kJ/kV (referred to rated arrester voltage corresponding to minimum discharge Characteristics)
d)	Continuous operating Voltage at 50 deg.C.	51 kV rms
e)	Max. residual voltage at 10 kA nominal discharge current	170 kVp
f)	Long duration discharge class	As per IEC
g)	High current short duration test value (4/10 micro second wave)	100 kAp
h)	Low current long duration test value (2000 micro sec)	900A
i)	Pressure relief class	A

8.0 TESTING AND COMMISSIONING

8.1 Shall perform all routine test as per the field Q.P of BPC and instructions of the equipment Supplier, if any.

GUARANTEED TECHNICAL PARTICULARS OF SURGE ARRESTERS

Sl. No.	Description	Unit	Particulars
1.0	Name of Manufacturer and country		
2.0	Applicable standards		
3.0	Quantity		
4.0	Arrester type		
5.0	Rated voltage	kV	
6.0	Rated frequency	Hz	
7.0	Continuous Operating Voltage	kV	
8.0	Nominal discharge current (8/20 microsec wave)	kA	
9.0	Minimum discharge capacity	kJ/kV	
10.0	Residual voltage for steep current impulse (1/5 micro/sec)	kVp	
11.0	Maximum Residual Voltage at nominal discharge current		
12.0	Current impulse withstand		
12.1	High current impulse	kAp	
12.2	Long duration current impulse (peak current and virtual duration of peak)	A	
13.0	Pressure relief class		
14.0	Line discharge class		
15.0	One minute power frequency withstand voltage of arrester housing	kV	
16.0	Impulse withstand voltage of arrester housing	kVp	
17.0	Nominal creepage distance	mm	
18.0	Cantilever strength	kN	
19.0	Total height	mm	
20.0	Total weight	Kg	

LIST OF APPROVED MAKES

1.1	M/s HITACHI ENERGY INDIA LTD. (FORMERLY ABB)	INDIA
1.2	M/s ELPRO INTERNATIONAL LTD.	INDIA
1.3	M/s OBLUM ELECTRICAL IND. LTD.	INDIA
1.4	M/s CROMPTON GREAVES LTD.	INDIA

Qualification Requirements

General

I. The EPC bidder shall have experience of supply, erection, testing and commissioning of at least 50 km of 66kV or above voltages in a single contract in hilly terrain in the last five (5) years.

Specific

I. The EPC bidder shall have experience of Aluminium Conductor Composite Core (ACCC) conductor stringing at least 20km in hilly terrain.

II. The EPC bidder shall obtain manufacturing authorization from Original Equipment Manufacturer (OEM) for the offered ACCC conductor meeting the following :

   a. Conductor manufacturers of offered ACCC conductors with carbon fibre composite core shall have at least 100 kilometres and 50 kilometres supply record outside the country of manufacture. It shall be in satisfactory operation in the field for at least 5 years period as on the date of bid closing. ACCC conductor manufacturers shall have design, manufacturing and supply experience of at least 10 years.

   b. Carbon fibre composite core manufacturers shall have design, manufacturing and supply experience of at least 10 years including over 45,000 km of supply record out of which at least 21,500 km shall be outside the country of manufacture.

   c. Hardware fitting manufacturers for ACCC conductors shall have at least 10 years of manufacturing experience of transmission line fittings with 70kN or higher rating including minimum manufacturing experience of at least 5 years for the proposed conductor type and the same should have been satisfactory operation for a minimum period of 5 years as on the date of bid closing. The offered type dead end assembly must include collets, collet housing type hardware arrangement and should have been in satisfactory operation for at least 5 years.

III. Bidder shall have assured access to supply of Hardware Fittings and Accessories for ACCC conductor (equivalent to ACSR Wolf) and XLPE Cables from qualified manufacturers meeting the minimum requirements specified herein, and shall demonstrate that, based on existing commitments, these materials will be available for use in the proposed Contract.

IV. All materials shall be procured from BPC approved vendor lists that meet the respective qualifying requirements. The Contractor shall finalize their sub-vendors/manufacturers for the supply of various line materials from among the qualified firms within **one** month from the date of issuance of the Letter of Award (LoA) and shall submit documents demonstrating compliance with the stipulated qualification requirements.

The bidder not meeting the qualifications criteria above shall be ground for disqualifications of the bids.

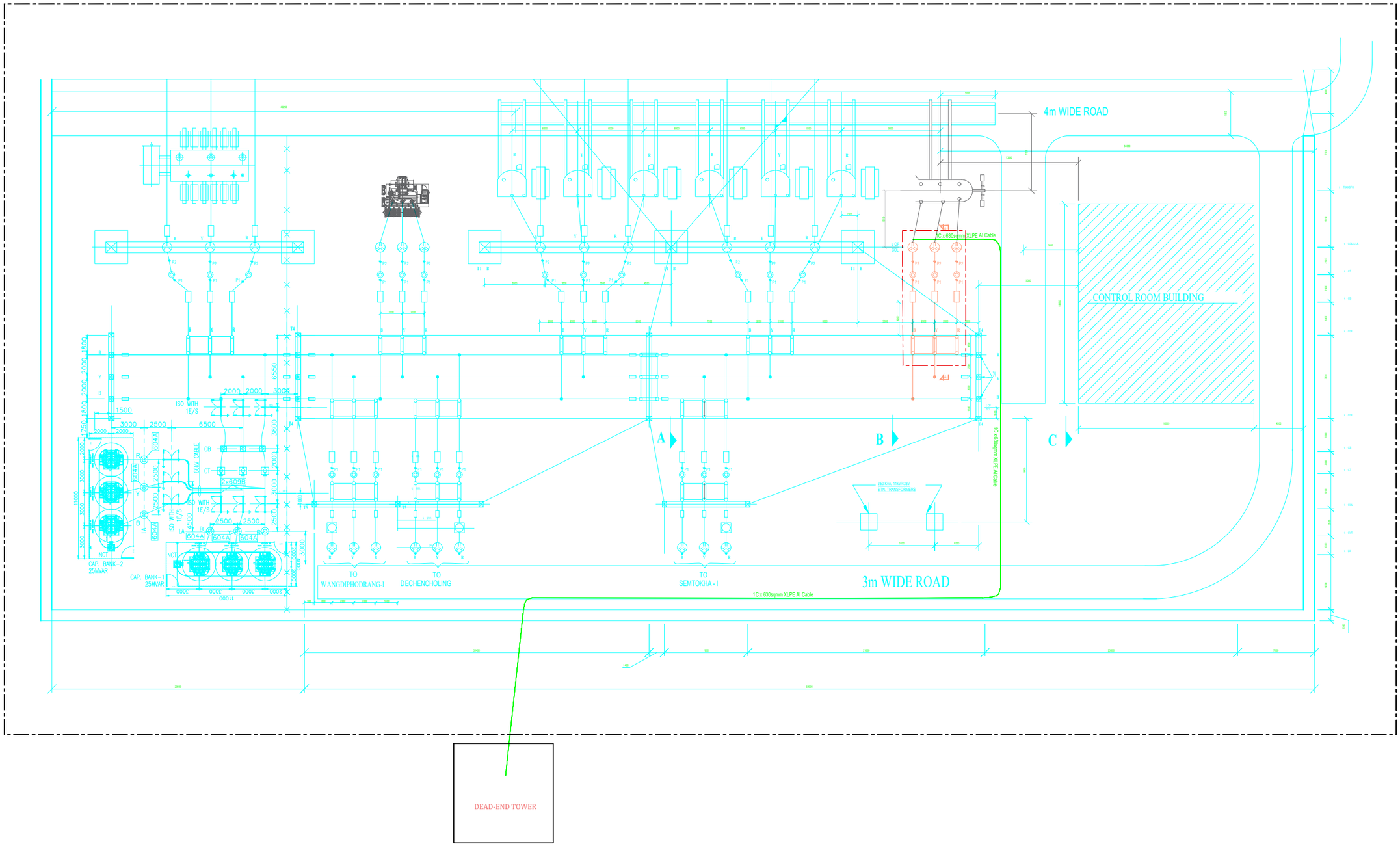

NOTE:

1. THE ARRANGEMENT SHOWN IS FOR TENDER PURPOSES ONLY. IT IS SUBJECT TO CHANGE DURING THE FINAL DESIGN AND ENGINEERING.

BHUTAN POWER CORPORATION LIMITED (BPC)	
PROJECT: 66 kV_LINE BAY CONVERSION SIMTOKHA, THIMPHU, BHUTAN	
DRAWING TITLE: 66kV PLAN LAYOUT	
DESIGNED : E&RD	APPROVED :
DRAWN :	DATE :
CHECKED :	SCALE : NTS
DWG. NO: BPC-SIMTOKHA-PLAN-001	SHEET 1 OF 1 REV: R0

SIZE-A1

This drawing and design is the property of BPC and must not be passed on to any person who is not authorized by organization nor can be copied or lent without prior permission in writing from the concerned authority.

This drawing and design is the property of BPC and must not be passed on to any person who is not authorized by organization nor can be copied or lent without prior permission in writing from the concerned authority.

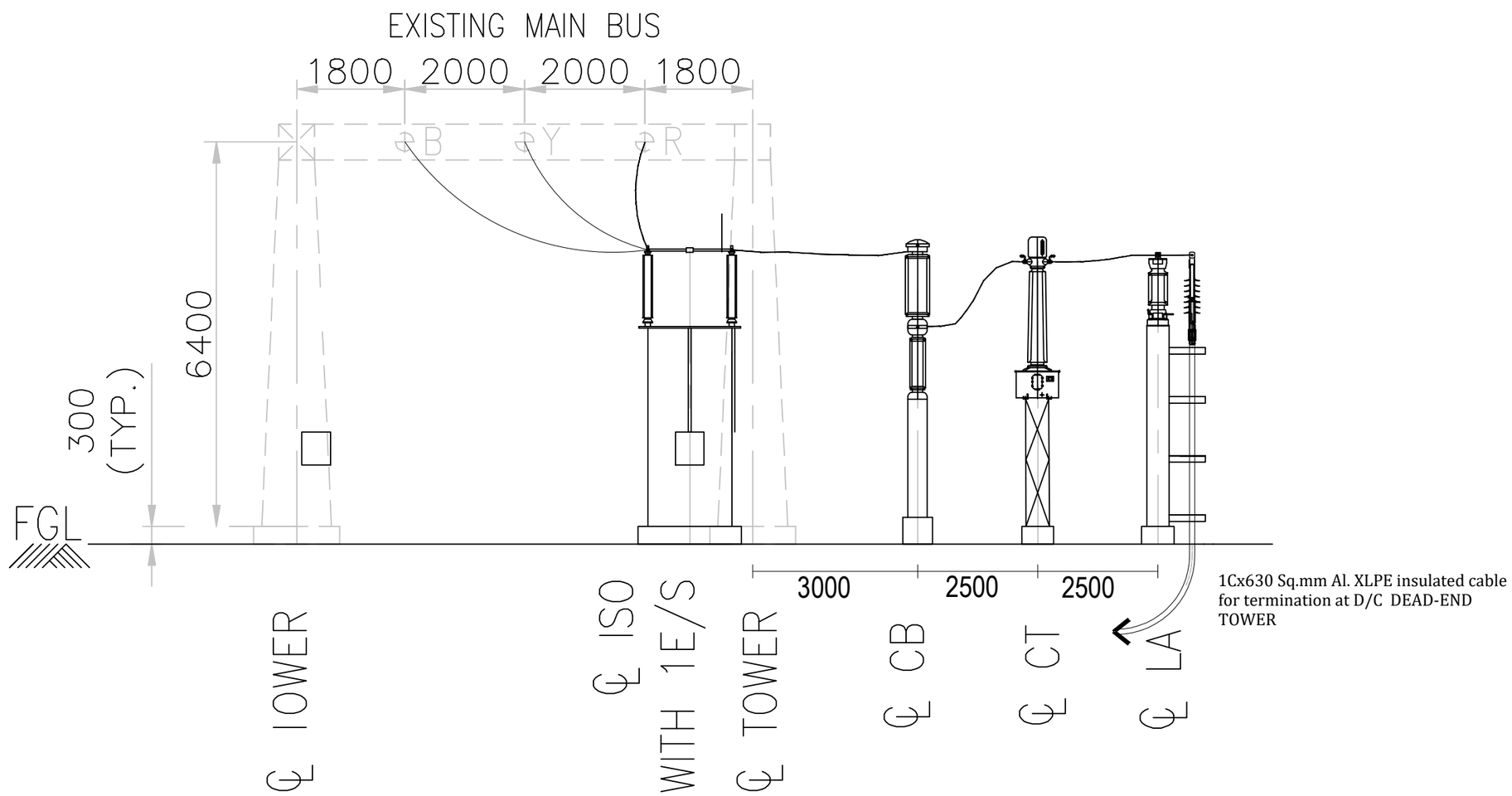

BHUTAN POWER CORPORATION LIMITED (BPC)	
PROJECT: 66 kV_LINE BAY CONVERSION SIMTOKHA, THIMPHU, BHUTAN	
DRAWING TITLE: 66kV SECTION LAYOUT	
DESIGNED : E&RD	APPROVED :
DRAWN :	DATE :
CHECKED :	SCALE : NTS
DWG. NO: BPC-SIMTOKHA-PLAN-001	SHEET 1 OF 1 REV. R0

SIZE-A1

This drawing and design is the property of BPC and must not be passed on to any person who is not authorized by organization nor can be copied or lent without prior permission in writing from the concerned authority.

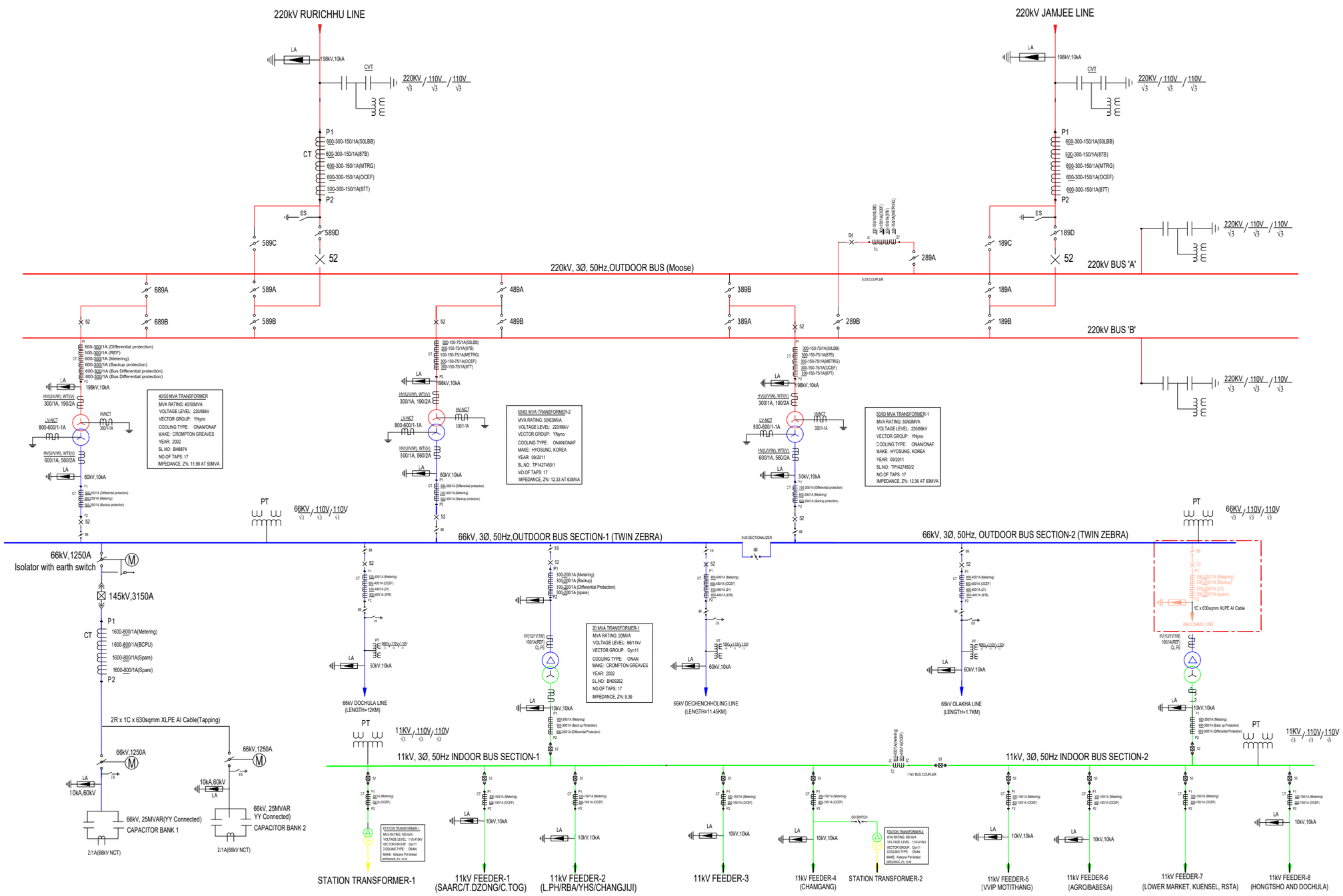

BHUTAN POWER CORPORATION LIMITED (BPC)

PROJECT:	66 kV_LINE BAY CONVERSION SIMTOKHA, THIMPHU, BHUTAN
DRAWING TITLE:	SINGLE LINE DIAGRAM
DESIGNED : E&RD	APPROVED :
DRAWN :	DATE :
CHECKED :	SCALE : NTS
DWG. NO: BPC-SIMTOKHA-SLD-001	SHEET 1 OF 1 REV. R0

SIZE-A1

SECTION 5

FORMS OF BID, APPENDIX TO BID, INTEGRITY PACT, BID SECURITY FORM, FORMS FOR JOINT VENTURE & MANUFACTURER'S AUTHORIZATION/UNDERTAKING

Appendix to Bid

Bidders shall duly sign, seal and submit the Appendix to Bid.

Description	Clause of Conditions of Contract	Data
Amount of Performance Security	10.1	Ten (10%) Percent of the Contract Price.
Time for issue of the Notice to commence	41.1	Date of signing of contract agreement.
Time for Completion	43.1	Twelve (12) Months from the date of Signing of Contract Agreement.
Amount of liquidated Damages	47.1	Point One (0.1%) Percent per day of the total Contract Price.
Limit of liquidated Damages	47.1	Ten (10%) Percent of the initial Contract Price.
Defects Liability Period	49.1	365 days from Taking-Over Certificate.
Minimum amount of Interim Payment Certificates	60.4	Nu. 2.5 million
Retention Money	60.7	Ten (10%) Percent of Interim Payment certificates.
Advance Payment	60.9(a)	Ten (10%) Percent.
Quarterly amortization Of Advances	60.9(b)	Ten (10)% percent.

Form of Bid

Name of Work :

_____

_____

To : Bhutan Power Corporation Limited
Thimphu, Bhutan

Gentlemen :

1. Having examined the Conditions of Contract, Specification, Drawings, and Bill of Quantities and Addenda Nos. _____ for the execution of the above-named Works we, the undersigned, offer to execute and complete such Works and remedy any defects therein in conformity with the Conditions of Contract, Specification, Drawings, Bill of Quantities and Addenda for the sum of _____ _____ as specified in the Appendix to Bid or such other sums as may be ascertained in accordance with the said Conditions.
2. In line with the requirements of the Bidding Documents, we enclose herewith the following Price Schedules, duly filled – in as per the proforma/schedules given in the Bidding Documents.
3. We are fully aware that the schedule and the Bidding Documents do not generally give a full description of Plants & Equipment to be supplied and services to be performed under each item and we shall deem to have read the Technical Specifications and other sections of the Bidding Documents and reviewed the drawings to ascertain the full scope of the requirements included in each item prior to filling in the rates and prices in the Price Bid. We agree that the rates and the prices to be quoted in the Price Bid shall be deemed to include and account for the full scope as aforesaid, including overheads and profit.

4. We declare and confirm that as mentioned in the Bidding Document, prices quoted by us in the Price Schedules shall be fixed and firm and shall not be subjected to any Price Adjustment during the currency of the contract.

5. We acknowledge that the Appendix to Bid forms part of our Bid.

6. We undertake, if our Bid is accepted, to commence the Works as soon as is reasonably possible after the receipt of the Engineer's notice to commence, and to complete the whole of the Works comprised in the Contract within the time stated in the Appendix to Bid.

7. We agree to abide by this Bid for the period of 60 days after the date fixed for receiving the same, and it shall remain binding upon us and may be accepted at any time before the expiration of that period.

8. Unless and until a formal Agreement is prepared and executed this Bid, together with your written acceptance thereof, shall constitute a binding contract between us.

9. We understand that you are not bound to accept any bid you may receive.

Dated this _____ day of __ ____ 20____

Signature _____ in the capacity of _____ duly authorised to sign bids for and on behalf of _____

Witness

_____

_____

INTEGRITY PACT

1 General:

Whereas, **Sangay Tenzin, Director, Construction & Procurement Department**, representing **Bhutan Power Corporation Limited (BPC),** hereinafter referred to as the "**Employer**" on one part, and _____ representing _____as the other part hereby execute this agreement as follows:

This agreement should be a part of the tender document, which shall be signed by both the parties at the time of purchase of bidding documents and submitted along with the tender document. This IP is applicable only to works, goods and services, the threshold of which will be announced by the government from time to time. The signing of the IP shall not apply to framework contracting such as annual office supplies etc.

2 Objectives:

Whereas, the Employer and the Bidder agree to enter into this agreement, hereinafter referred to as IP, to avoid all forms of corruption or deceptive practice by following a system that is fair, transparent and free from any influence/unprejudiced dealings in the **bidding process**[1] and **contract administration**[2], with a view to:-

2.1 Enabling the Employer to obtain the desired contract at a reasonable and competitive price in conformity to the defined specifications of the works, goods or services; and

2.2 Enabling bidders to abstain from bribing or any corrupt practice in order to secure the contract by providing assurance to them that their competitors will also refrain from bribing and other corrupt practices

3. Scope

The validity of this IP shall cover the bidding process and contract administration period.

4. Commitments of the Employer:

The Employer Commits itself to the following:-

4.1 The Employer hereby undertakes that no official of the Employer, connected directly or indirectly with the contract, will demand, take a promise for or accept, directly or through intermediaries, any bribe, consideration, gift, reward, favor or any material or immaterial benefit or any other advantage from the Bidder, either for themselves or for any person, organization or third party related to the

[1] Bidding process, for the purpose of this IP, shall mean the procedures covering tendering process starting from bid preparation, bid submission, bid processing, and bid evaluation.

[2] Contract Administration, for the purpose of this IP, shall mean contract award, contract implementation, un-authorized sub-contracting and contract handing/taking over.

contract in exchange for an advantage in the bidding process and contract administration.

4.2 The Employer further confirms that its officials has not favored any prospective bidder in any form that could afford an undue advantage to that particular bidder in the bidding process and contract administration and will treat all Bidders alike.

4.3 Officials of the Employer, who may have observed or noticed or have reasonable suspicion shall report to the head of the employing agency or an appropriate government office any violation or attempted violation of clauses 4.1 and 4.2.

4.4 Following report on violation of clauses 4.1 and 4.2 by official (s), through any source, necessary disciplinary proceedings, or any other action as deemed fit, including criminal proceedings shall be initiated by the Employer and such a person shall be debarred from further dealings related to the bidding process and contract administration.

5 Commitments of Bidders:

The Bidder commits himself/herself to take all measures necessary to prevent corrupt practices, unfair means and illegal activities during any stage of the bidding process and contract administration in order to secure the contract or in furtherance to secure it and, in particular, commits himself/herself to the following :-

5.1 The Bidder shall not offer, directly or through intermediaries, any bribe, gift, consideration, reward, favor, any material or immaterial benefit or other advantage, commission, fees, brokerage or inducement to any official of the Employer, connected directly or indirectly with the bidding process and contract administration, or to any person, organization or third party related to the contract in exchange for any advantage in the bidding process and contract administration.

5.2 The Bidder shall not collude with other parties interested in the contract to manipulate in whatsoever form or manner, the bidding process and contract administration.

5.3 If the bidder(s) have observed or noticed or have reasonable suspicion that the provisions of the IP have been violated by the procuring agency or other bidders, the bidder shall report such violations to the head of the procuring agency.

6 Sanctions for Violation:

The breach of any of the aforesaid provisions shall result in administrative charges or penal actions as per the relevant rules and laws.

6.1 The breach of the IP or commission of any offence (forgery, providing false information, mis-representation, providing false/fake documents, bid rigging, bid steering or coercion) by Bidder, or any one employed by him, or acting on his /her behalf (whether with or without the knowledge of the Bidder), shall be dealt

with as per the terms and conditions of the contract and other provisions of the relevant laws including Debarment Rules.

6.2 The breach of the IP or commission of any offence by the officials of the procuring agency shall be dealt with as per rules and laws of the land in vogue.

7. Monitoring and Administration:

7.1 The respective procuring agency shall be responsible for administration and monitoring of the IP as per the relevant laws.

7.2 The bidder shall have the right to appeal as per the arbitration mechanism contained in the relevant rules.

We, hereby declare that we have read and understood the clauses of this agreement and shall abide by it.

The parties hereby sign this Integrity Pact at _____
on _____.

(Sangay Tenzin)
Director, C&PD

Affix
Legal
Stamp

Witness:

(Sangay Lungten)
CID: 11106000842

Witness:

CID: _____

SECTION 5

FORMS OF BID, APPENDIX TO BID, BID SECURITY, INTEGRITY PACT, FORMS FOR JOINT VENTURE, MANUFACTURER'S AUTHORISATION

Form of Bid

Name of Work :

_____

_____

To : Bhutan Power Corporation Limited
Thimphu, Bhutan

Gentlemen :

1. Having examined the Conditions of Contract, Specification, Drawings, and Bill of Quantities and Addenda Nos. _____ for the execution of the above-named Works we, the undersigned, offer to execute and complete such Works and remedy any defects therein in conformity with the Conditions of Contract, Specification, Drawings, Bill of Quantities and Addenda for the sum of _____ _____ as specified in the Appendix to Bid or such other sums as may be ascertained in accordance with the said Conditions.
2. In line with the requirements of the Bidding Documents, we enclose herewith the following Price Schedules, duly filled – in as per the proforma/schedules given in the Bidding Documents.
3. We are fully aware that the schedule and the Bidding Documents do not generally give a full description of Plants & Equipment to be supplied and services to be performed under each item and we shall deem to have read the Technical Specifications and other sections of the Bidding Documents and reviewed the drawings to ascertain the full scope of the requirements included in each item prior to filling in the rates and prices in the Price Bid. We agree that the rates and the prices to be quoted in the Price Bid shall be deemed to include and account for the full scope as aforesaid, including overheads and profit.

4. We declare and confirm that as mentioned in the Bidding Document, prices quoted by us in the Price Schedules shall be fixed and firm and shall not be subjected to any Price Adjustment during the currency of the contract.

5. We acknowledge that the Appendix to Bid forms part of our Bid.

6. We undertake, if our Bid is accepted, to commence the Works as soon as is reasonably possible after the receipt of the Engineer's notice to commence, and to complete the whole of the Works comprised in the Contract within the time stated in the Appendix to Bid.

7. We agree to abide by this Bid for the period of 60 days after the date fixed for receiving the same, and it shall remain binding upon us and may be accepted at any time before the expiration of that period.

8. Unless and until a formal Agreement is prepared and executed this Bid, together with your written acceptance thereof, shall constitute a binding contract between us.

9. We understand that you are not bound to accept any bid you may receive.

Dated this _____ day of __ ____ 20____

Signature _____ in the capacity of _____ duly authorised to sign bids for and on behalf of _____

Witness

_____

_____

INTEGRITY PACT

1 General:

Whereas, **Sangay Tenzin, Director, Construction & Procurement Department**, representing **Bhutan Power Corporation Limited (BPC),** hereinafter referred to as the "**Employer**" on one part, and _____ representing _____as the other part hereby execute this agreement as follows:

This agreement should be a part of the tender document, which shall be signed by both the parties at the time of purchase of bidding documents and submitted along with the tender document. This IP is applicable only to works, goods and services, the threshold of which will be announced by the government from time to time. The signing of the IP shall not apply to framework contracting such as annual office supplies etc.

2 Objectives:

Whereas, the Employer and the Bidder agree to enter into this agreement, hereinafter referred to as IP, to avoid all forms of corruption or deceptive practice by following a system that is fair, transparent and free from any influence/unprejudiced dealings in the **bidding process**[1] and **contract administration**[2], with a view to:-

2.1 Enabling the Employer to obtain the desired contract at a reasonable and competitive price in conformity to the defined specifications of the works, goods or services; and

2.2 Enabling bidders to abstain from bribing or any corrupt practice in order to secure the contract by providing assurance to them that their competitors will also refrain from bribing and other corrupt practices

3. Scope

The validity of this IP shall cover the bidding process and contract administration period.

4. Commitments of the Employer:

The Employer Commits itself to the following:-

4.1 The Employer hereby undertakes that no official of the Employer, connected directly or indirectly with the contract, will demand, take a promise for or accept, directly or through intermediaries, any bribe, consideration, gift, reward, favor or any material or immaterial benefit or any other advantage from the Bidder, either for themselves or for any person, organization or third party related to the

[1] Bidding process, for the purpose of this IP, shall mean the procedures covering tendering process starting from bid preparation, bid submission, bid processing, and bid evaluation.

[2] Contract Administration, for the purpose of this IP, shall mean contract award, contract implementation, un-authorized sub-contracting and contract handing/taking over.

contract in exchange for an advantage in the bidding process and contract administration.

4.2 The Employer further confirms that its officials has not favored any prospective bidder in any form that could afford an undue advantage to that particular bidder in the bidding process and contract administration and will treat all Bidders alike.

4.3 Officials of the Employer, who may have observed or noticed or have reasonable suspicion shall report to the head of the employing agency or an appropriate government office any violation or attempted violation of clauses 4.1 and 4.2.

4.4 Following report on violation of clauses 4.1 and 4.2 by official (s), through any source, necessary disciplinary proceedings, or any other action as deemed fit, including criminal proceedings shall be initiated by the Employer and such a person shall be debarred from further dealings related to the bidding process and contract administration.

5 Commitments of Bidders:

The Bidder commits himself/herself to take all measures necessary to prevent corrupt practices, unfair means and illegal activities during any stage of the bidding process and contract administration in order to secure the contract or in furtherance to secure it and, in particular, commits himself/herself to the following :-

5.1 The Bidder shall not offer, directly or through intermediaries, any bribe, gift, consideration, reward, favor, any material or immaterial benefit or other advantage, commission, fees, brokerage or inducement to any official of the Employer, connected directly or indirectly with the bidding process and contract administration, or to any person, organization or third party related to the contract in exchange for any advantage in the bidding process and contract administration.

5.2 The Bidder shall not collude with other parties interested in the contract to manipulate in whatsoever form or manner, the bidding process and contract administration.

5.3 If the bidder(s) have observed or noticed or have reasonable suspicion that the provisions of the IP have been violated by the procuring agency or other bidders, the bidder shall report such violations to the head of the procuring agency.

6 Sanctions for Violation:

The breach of any of the aforesaid provisions shall result in administrative charges or penal actions as per the relevant rules and laws.

6.1 The breach of the IP or commission of any offence (forgery, providing false information, mis-representation, providing false/fake documents, bid rigging, bid steering or coercion) by Bidder, or any one employed by him, or acting on his /her behalf (whether with or without the knowledge of the Bidder), shall be dealt

with as per the terms and conditions of the contract and other provisions of the relevant laws including Debarment Rules.

6.2 The breach of the IP or commission of any offence by the officials of the procuring agency shall be dealt with as per rules and laws of the land in vogue.

7. Monitoring and Administration:

7.1 The respective procuring agency shall be responsible for administration and monitoring of the IP as per the relevant laws.

7.2 The bidder shall have the right to appeal as per the arbitration mechanism contained in the relevant rules.

We, hereby declare that we have read and understood the clauses of this agreement and shall abide by it.

The parties hereby sign this Integrity Pact at _____
on _____.

(Sangay Tenzin)
Director, C&PD

Affix
Legal
Stamp

Witness:

(Sangay Lungten)
CID: 11106000842

Witness:

CID: _____

Appendix to Bid

Bidders shall duly sign, seal and submit the Appendix to Bid.

Description	Clause of Conditions of Contract	Data
Amount of Performance Security	10.1	Ten (10%) Percent of the Contract Price.
Time for issue of the Notice to commence	41.1	Date of signing of contract agreement
Time for Completion	43.1	Twelve (12) Months from the date of Signing of Contract Agreement
Amount of liquidated Damages	47.1	Point One (0.1%) Percent per day of the total Contract Price.
Limit of liquidated Damages	47.1	Ten (10%) Percent of the initial Contract Price.
Defects Liability Period	49.1	365 days from Taking-Over Certificate
Minimum amount of Interim Payment Certificates	60.4	Nu. 2.5 million
Retention Money	60.7	Ten (10%) Percent of Interim Payment certificates
Advance Payment	60.9(a)	Ten (10%) Percent
Quarterly amortization Of Advances	60.9(b)	Ten (10)% percent

SAMPLE FORM OF BID SECURITY (BANK GUARANTEE

WHERE AS, _____ *[Name of Bidder]* (hereinafter called ‘’the Bidder") submitted his bid dated _____ *[Date]* for the construction of _____ *[Name of Contract]*(hereinafter called "the Bid").

KNOW ALL MEN by these presents that We _____ *[Name of Bank]* of _____ *[Name of Country]* having our registered office at _____ (hereinafter called "the Bank") are bound unto _____ *[Name of Employer]* (hereinafter called "the Employer") in the sum of _____ for which payment well and truly to be made to the said Employer the Bank binds himself, his successors and assigns by these presents.

SEALED with the Common Seal of the said Bank this_____day of _____ 20 ___

THE CONDITIONS of this obligation are**:**

(1) If the Bidder withdraws his Bid during the period of bid validity specified in the Form of Bid; or

(2) If the Bidder does not accept the correction of arithmetical errors of his bid price in accordance with the Instructions to Bidders; or

(3) If the Bidder having been notified of the acceptance of his Bid by the Employer during the period of bid validity:

(a) fails or refuses to execute the Form of Agreement in accordance with the Instructions to Bidders, if required; or

(b) fails or refuses to furnish the Performance Security, in accordance with the Instructions to Bidders.

We undertake to pay to the Employer up to the above amount upon receipt of his first written demand, without the Employer having to substantiate his demand, provided that in his demand the Employer will note that the amount claimed by him is due to him owing to the occurrence of one or both of the two conditions, specifying the occurred condition or conditions.

This Guarantee will remain in force up to and including the date thirty (30) days beyond the validity of the bid as stated in the Instructions to Bidders or as it may be extended by the Employer, notice of which extension(s) to the Bank is hereby waived. Any demand in respect of this Guarantee should reach the Bank not later than the above date.

DATE _____SIGNATURE OF THE BANK_____

WITNESS _____ SEAL _____

_____

(Signature, Name and Address)

FORM OF POWER OF ATTORNEY FOR JOINT VENTURE

(On Non-Judicial Stamp Paper of Appropriate value, if required as per laws of the country of the bidder, to be Purchased in the Name of Joint Venture)

KNOW ALL MEN BY THESE PRESENTS THAT WE , the Partners whose details are given hereunder ..... have formed a Joint Venture under the laws of .....(*)/intend to form a Joint Venture(*) [(*) delete whichever is not applicable] and having our Registered Office(s)/Head Office(s) at ..... (hereinafter called the 'Joint Venture' which expression shall unless repugnant to the context or meaning thereof, include its successors, administrators and assigns) acting through M/s ..... being the Partner in-charge do hereby constitute, nominate and appoint M/s..... a Company incorporated under the laws of .....……... and having its Registered/Head Office at ..... as our duly constituted lawful Attorney (hereinafter called "Attorney" or "Authorised Representative" or "Partner In-charge") to exercise all or any of the powers for and on behalf of the Joint Venture in regard to Specification No..... Package ..... the bids for which have been invited by Bhutan Power Corporation Ltd. (hereinafter called the '**Employer**') to undertake the following acts :

i) To sign and submit proposal and participate in the aforesaid Bid Specification of the Employer on behalf of the "Joint Venture".

ii) To negotiate with the Employer the terms and conditions for award of the Contract pursuant to the aforesaid Bid and to sign the Contract with the Employer for and on behalf of the "Joint Venture".

iii) To do any other act or submit any document related to the above.

iv) To receive, accept and execute the Contract for and on behalf of the "Joint Venture".

For the above purpose, the person(s) authorized by the Partner In-charge shall be the person(s) authorized to act on behalf of the “Joint Venture” as per the Power of Attorney given to him/her/them by the Partner In-Charge,

It is clearly understood that all the partners of the joint venture shall be liable jointly and severally for the execution of the Contract in accordance with the Contract terms and the Partner In-charge (Lead Partner) shall ensure performance of the Contract(s) and if one or more Partner fail to perform their respective portions of the Contract(s), the same shall be deemed to be a default by all the Partners.

It is expressly understood that this Power of Attorney shall remain valid binding and irrevocable till completion of the Defect Liability Period in terms of the Contract.

The Joint Venture hereby agrees and undertakes to ratify and confirm all the whatsoever the said Attorney/Authorized Representatives/Partner in-charge quotes in the bid, negotiates and signs the Contract with the Employer and/or proposes to act on behalf of the Joint Venture by virtue of this Power of Attorney and the same shall bind the Joint Venture as if done by itself.

IN WITNESS THEREOF the Partners Constituting the Joint Venture as aforesaid have executed these presents on this ..... day of ……..... under the Common Seal(s) of their Companies.

for and on behalf of the
Partners of Joint Venture
.....

.....

The Common Seal of the above Partners of the Joint Venture :

The Common Seal has been affixed there unto in the presence of :

WITNESS

1. Signature.....

   Name .....….....

   Designation .....….....

   Occupation .....….....

2. Signature.....…

   Name .....….....

   Designation .....…....

   Occupation .....….....

FORM OF UNDERTAKING BY THE JOINT VENTURE PARTNERS

(On Non-Judicial Stamp Paper of Appropriate Value, if required as per laws of the country of the bidder, to be Purchased in the Name of Joint Venture)

THIS JOINT DEED OF UNDERTAKING executed on this……. day of…….. Two Thousand and ……..... by…….. a company incorporated under the laws of …… and having its Registered Office at .....(hereinafter called the "Party No.1" which expression shall include its successors, executors and permitted assigns) and M/s……a company incorporated under the laws of……and having its Registered Office at .....(hereinafter called the "Party No.2" which expression shall include its successors, executors and permitted assigns) and M/s.. .. .. a Company incorporated under the laws of…….. and having its Registered Office at……. (hereinafter called the "Party No.3" which expression shall include its successors, executors and permitted assigns) for the purpose of making a bid and entering into a contract [hereinafter called the "Contract" {in case of award)] against the Specification No……for _____(Package) _____ associated with_____of *Bhutan Power Corporation Ltd. (hereinafter called the 'Employer').*

WHEREAS the Party No.1, Party No.2 and Party No.3 have entered into an Agreement dated .....

AND WHEREAS the Employer invited bids as per the above mentioned Specification for the design, manufacture, Supply of Equipment Materials stipulated in the bidding documents under_____ (Package) _____ associated with _____

AND WHEREAS Clause 4.1, Section-ITB and 'Qualification Requirement of the Bidder', Evaluation and Qualification Criteria forming part of the bidding documents, inter-alia, stipulates that an Undertaking of two or more qualified partners, meeting the requirements of 'Qualification Requirement of the Bidder', Evaluation and Qualification Criteria, as applicable may bid, provided, the Joint Venture fulfills all other requirements under Clause 4.2 of ITB and 'Qualification Requirement of the Bidder', Evaluation and Qualification Criteria and in such a case, the Letter of Bid (Bid Form) shall be signed by the Partner –In Charge so as to legally bind all the Partners of the Joint Venture, who will be jointly and severally liable to perform the Contract and all obligations hereunder.

The above clause further states that this Undertaking shall be attached to the bid and the Contract performance guarantee will be as per the format enclosed with the bidding document without any restrictions or liability for either party.

AND WHEREAS the bid is being submitted to the Employer vide proposal No……..dated…... by Party No.1 based on this Undertaking between all the parties; under these presents and the bid in accordance with the requirements of Clause 4.1, Section-ITB and 'Qualification Requirement of the Bidder', Evaluation and Qualification Criteria, has been signed by all the parties.

NOW THIS UNDERTAKING WITNESSETH AS UNDER:

In consideration of the above premises and agreements all the parties of this Deed of Undertaking do hereby declare and undertake:

1. In requirement of the award of the Contract by the Employer to the Joint Venture Partners, we, the Parties do hereby undertake that M/s…… the Party No.1, shall act as Lead Partner and further declare and confirm that we the parties to the Joint Venture shall jointly and severally be bound unto the Employer for the successful performance of the Contract and shall be fully responsible for the design, manufacture, Supply, and successful performance of the equipment in accordance with the Contract:

2 In case of any breach or default of the said Contract by any of the parties to the Joint Venture, the party(s) do hereby undertake to be fully responsible for the successful performance of the Contract and to carry out all the obligations and responsibilities under the Contract in accordance with the requirements of the Contract.

3 Further, if the Employer suffers any loss or damage on account of any breach in the Contract or any shortfall in the performance of the equipment in meeting the performances guaranteed as per the specification in terms of the Contract, the Party(s) of these presents undertake to promptly make good such loss or damages caused to the Employer, on its demand without any demur. It shall not be necessary or obligatory for the Employer to proceed against Lead Partner to these presents before proceeding against or dealing with the other Party(s), the Employer can proceed against any of the parties who shall be jointly and severally liable for the performance and all other liabilities/obligations under the Contract to the Employer.

4 The financial liability of the Parties of this Deed of Undertaking to the Employer, with respect to any of the claims rising out of the performance or non- performance of the obligations set forth in this Deed of Undertaking, read in conjunction with the relevant conditions of the Contract shall, however not be limited in any way so as to restrict or limit the liabilities or obligations of any of the Parties of this Deed of Undertaking.

5 It is expressly understood and agreed between the Parties to this Undertaking that the responsibilities and obligations of each of the Parties shall be as delineated in Appendix – I (to be suitably appended by the Parties along with this undertaking in its bid). It is further undertaken by the parties that the above sharing of responsibilities and obligations shall not in any way be a limitation of joint and several responsibilities of the Parties under the Contract.

6 It is also understood that this Undertaking is provided for the purposes of undertaking joint and several liabilities of the partners to the Joint Venture for submission of the bid and performance of the Contract if awarded and that this Undertaking shall not be deemed to give rise to any additional liabilities or obligations, in any manner or any law, on any of the Parties to this Undertaking or on the Joint Venture, other than the express provisions of the Contract.

7. ***This Undertaking shall be construed and interpreted in accordance with the provisions of the Contract.***

8. ***In case of an award of a Contract, we the parties to this Deed of Undertaking do hereby agree that we shall be jointly and severally responsible for furnishing a Contract performance security from a bank in favour of the Employer in the currency/currencies of the Contract.***

9 It is further agreed that this Deed of Undertaking shall be irrevocable and shall form an integral part of the bid and shall continue to be enforceable till the Employer discharges the same or upon the completion of the Contract in accordance with its provisions, whichever is earlier. It shall be effective from the date first mentioned above for all purposes and intents.

IN WITNESS WHEREOF, the Parties to this Deed of Undertaking have through their authorised representatives executed these presents and affixed Common Seals of their companies, on the day, month and year first mentioned above.

Common Seal of …….
has been affixed in my/ our
presence pursuant to Board of

For Lead Partner (Party No.-1)
For and on behalf of M/s
……..

Name ……..

Designation …….

Signature …….

(Signature of the authorized representative)

WITNESS :

I. ……

II. ……

Common Seal of …….
has been affixed in my/ our

For Party No.-2
For and on behalf of
M/s……..

Name ……..

Designation …….

Signature …….

(Signature of the authorized representative)

WITNESS :

I. ……

II. ……

Common Seal of …….
has been affixed in my/ our
presence pursuant to Board of

For Party No.-3
For and on behalf of M/s.
……..

Name ……..

Designation …….

Signature …….

(Signature of the authorized representative)

WITNESS :

I. ……

II. ……

Manufacturer's Authorization Form
(On Manufacturer's Letterhead)

To: [Insert: name of Employer]

Dear Ladies and/or Gentlemen,

WE *[insert: **name of Manufacturer**]* who are established and reputable manufacturers of *[insert: **name and/or description of the plant & equipment**]* having production facilities at *[insert: **address of factory**]* do hereby authorize *[insert: **name & address of Bidder**]* (hereinafter, the "Bidder") to submit a bid, and subsequently negotiate and sign the Contract with you against ICB *[insert**: title and reference number of Invitation for Bids**]* including the above plant & equipment or other goods produced by us.

We hereby extend our full guarantee and warranty for the above specified plant & equipment materials or other goods offered supporting the supply, installation and achieving of Operational Acceptance of the plant by the Bidder against these Bidding Documents, and duly authorize said Bidder to act on our behalf in fulfilling these guarantee and warranty obligations. We also hereby declare that we and ……, *[insert: **name of the Bidder**]* have entered into a formal relationship in which, during the duration of the Contract (including warranty / defects liability) we, the Manufacturer or Producer, will make our technical and engineering staff fully available to the technical and engineering staff of the successful Bidder to assist that Bidder, on a reasonable and best effort basis, in the performance of all its obligations to the Purchaser under the Contract.

For and on behalf of the Manufacturer

Signed: _____
Date: _____

In the capacity of *[insert: **title of position or other appropriate designation**]* and this should be signed by a person having the power of attorney to legal bind the manufacturer.

Date:.....

Place:.....

(Signature).....….....……..
(Printed Name).....……
(Designation).....…….....
(Common Seal)…….....…...….....

Note 1. The letter of Undertaking should be on the letterhead of the Manufacturer and should be signed by a person competent and having Power of Attorney to legally bind the Manufacturer. It shall be included by the bidder in its bid.
2. Above undertaking shall be registered or notarized so as to be legally enforceable.

FORM OF UNDERTAKING BY THE 66kV EQUIPMENT MANUFACTURER FOR SUPERVISION, AFTER SALE SERVICES, AND AVAILABILITY OF SPARES

(ON NON-JUDICIAL STAMP PAPER OF APPROPRIATE VALUE)

THIS DEED OF UNDERTAKING executed this ……. day of …….. Two Thousand and …… by M/s. ……., a Company incorporated under the laws of …… and having its Registered Office at …….. and is a manufacturer of 132 kV **……*.....** (hereinafter called the "Manufacturer" which expression shall include its successors, executors and permitted assigns), in favour of …….. *(insert names of the Employer)* ……., having its registered office at …….*(insert registered address of the Employer)*…… (hereinafter called the "Employer" which expression shall include its successors, executors and permitted assigns)

WHEREAS the "Employer" invited Bid as per its Specification No. ……. for the construction of …. *(insert name of the package along with project name)* ……

AND WHEREAS the Bidder has submitted its Bid to the Employer vide Proposal No. ……..….……. dated ……. based on the above stipulation and has agreed to furnish this Deed of undertaking to be enforceable in the event of the award of the Contract by the Employer.

NOW THEREFORE THIS UNDERTAKING WITNESSETH as under:

1.0 In consideration of the award of Contract by the Employer to the Bidder (hereinafter referred to as the "Contract") we, the Manufacturer, do hereby agree and undertake in the event of the award of the Contract to provide supervision of installation, testing and commissioning of 132kV …….*..... and after-sales service and supply of spare parts during the execution and until not less than 15 years from the date of declaration of Sale or from the date of commissioning of the Project whichever is earlier.

2.0 This Deed of Undertaking shall be construed and interpreted in accordance with the laws of India, and the courts in Delhi shall have exclusive jurisdiction over all matters arising under the Undertaking.

3.0 We agree that this undertaking shall be irrevocable and form an integral part of the Contract. We further agree that this undertaking shall be valid and enforceable for a period of 15 (fifteen) years from the date of the Contract.

IN WITNESS WHEREOF, the manufacturer has, through their authorised representatives, executed these presents and affixed common seals for their respective companies on the day, month, and year first mentioned above.

WITNESS	[For Manufacturer]
Signature …….	
	(Signature of the authorized representative)
Name ……..	
	Name ……..
Office Address …….	
	Common Seal of Company …...…….

Note:

1. For the purpose of executing the Deed of Undertaking, the non-judicial stamp papers of appropriate value shall be purchased in the name of the executant.

2. The Undertaking shall be signed on all the pages by the authorised representative(s) of the 400kV Equipment manufacturer and should invariably be witnessed.

3. This Deed of Undertaking duly attested by Notary Public of the place(s) of the respective executant shall be submitted along with the bid.

4. *Insert name of the Equipment viz., 400kV equipment(s).

SECTION 6
SAMPLE FORM OF AGREEMENT

SECTION 6

SAMPLE FORM OF AGREEMENT

(Bidder should not complete this Form of Agreement at this time)

BHUTAN POWER CORPORATION LIMITED
THIMPHU: BHUTAN

CONTRACT AGREEMENT
for supply, construction, testing and commissioning of 1x66kV double circuit from Semtokha substation to Dechencholing Substation, Thimphu.

(CONTRACT NO._____)

This Agreement was made on this _____ between Bhutan Power Corporation Ltd. (BPC), having its headquarters at Thimphu, Bhutan (hereinafter called "the Employer" or "BPC"), on the one hand, and _____, having its registered office at _____ and (hereinafter called "the Contractor"), on the other hand.

Whereas the Employer is desirous that the Contractor execute certain works, viz. **supply, construction, testing and commissioning of 1x66kV double circuit from Semtokha substation to Dechencholing Substation,** and has accepted a Bid by the Contractor for the execution and completion of such Works and the remedying of any defects therein.

Now, this Agreement is witnessed as follows**:**

1. In this Agreement, words and expressions shall have the same meanings as are respectively assigned to them in the Conditions of Contract hereinafter referred to.

2. All documents forming part of the Contract (and all parts thereof) are intended to be correlative, complementary and mutually explanatory. The Contract shall be read as a whole. The following documents in the following order shall be deemed to form and be read and construed as part of this Agreement viz:

   (a) This Agreement;
   (b) The Integrity Pact;
   (c) The Letter of Acceptance;
   (d) Priced Bill of Quantities;
   (e) The said Bid, along with the clarifications and correspondence from the date of Bid Opening to the signing of the Contract;
   (f) The Conditions of Contract (Part II – Conditions of Particular Application) along with Appendix to Bid;

(g) The Conditions of Contract (Part I – General Conditions of Contract);
(h) The Instruction to Bidders;
(i) The Technical Specifications and the Scope of Works as indicated in BPC's bid document read along with all amendments thereof;
(j) The Schedules of Supplementary Information as submitted by the Contractor along with the Bid read in conjunction with clarifications and correspondence till the signing of the Agreement;
(k) Standards and Quality Requirements; and
(l) Any other document forming Part of the Contract.

3. In consideration of the payments to be made by the Employer to the Contractor as hereinafter mentioned, the Contractor hereby covenants with the Employer to execute and complete the Works and remedy any defects therein in conformity in all respects with the provisions of the Contract.

4. The Employer hereby covenants to pay the Contractor in consideration of the execution and completion of the Works and the remedying of defects therein the Contract Price or such other sum as may become payable under the provisions of the Contract at times and in the manner prescribed by the Contract. The total contract price shall be **_____.**

5. For the purpose of this Agreement, all the correspondence shall be in the form of a letter or email. Correspondence to either party shall be addressed as below unless subsequently modified by either party in writing:

Employer's Address (I)

The Director
Construction & Procurement Department
Bhutan Power Corporation Limited
Thimphu, Bhutan

Mobile: +975 17614829
Email: sangaytenzin1@bpc.bt

Employer's Address (II)
The Chief Manager
Construction Section
Construction Division
Construction & Procurement Department
Bhutan Power Corporation Limited
Thimphu, Bhutan

Mobile: +975 17761090
Email: tandingyeltshen@bpc.bt

Contractor's Address:

IN WITNESS WHEREOF, the parties hereto have caused this agreement to be signed in their respective names on the date written.

SIGNED, SEALED AND DELIVERED

Binding Signature of Employer **Binding Signature of Contractor**

Signed in the presence of

Witness of Employer's Signature **Witness of Contractor's Signature**

SECTION 7
SAMPLE FORMS OF SECURITIES

SECTION 7 - SAMPLE FORMS OF SECURITIES

Samples of acceptable forms of guarantee are annexed. Bidders should not complete the forms at this time. Only the successful bidder will be required to provide guarantee(s) in accordance with the samples, or in a similar acceptable to the Employer.

a) Performance Bank Guarantee

b) Bank Guarantee for Advance Payment

PERFORMANCE BANK GUARANTEE

To : _____(name of Employer)
_____(address of Employer)

WHEREAS _____ *[name and address of Contractor]* (hereinafter called "the Contractor") has undertaken, in pursuance of Contract No. _____ dated _____ to execute the complete works related to ----------(hereinafter called "the Contract");

AND WHEREAS it has been stipulated by you in the said contract that the Contractor shall furnish you with a Bank Guarantee by a recognized bank for the sum specified therein as security for compliance with his obligations in accordance with the Contract;

AND WHEREAS we have agreed to give the Contractor such a Bank Guarantee;

NOW THEREFORE, we hereby affirm that we are the Guarantor and responsible to you, on behalf of the Contractor, up to a total of _____ *(amount of Guarantee)* _____ *[in words]*, such sum being payable in the currency in which the Contract Price is payable, and we undertake to pay you, upon your first written demand and without cavil or argument, any sum or sums within the limits of _____ *[amount of Guarantee]* as aforesaid without your needing to prove or to show grounds or reasons for your demand for the sum specified therein.

We hereby waive the necessity of your demanding the said debt from the Contractor before presenting us with the demand.

We further agree that no change, addition, or other modification of the terms of the Contract, the Works to be performed thereunder, or any of the Contract documents that may be made between you and the Contractor shall in any way release us from any liability under this guarantee, and we hereby waive notice of any such change, addition, or modification.

This guarantee shall be valid until the date of issue of the Defects Liability Certificate *[Insert date]*.

SIGNATURE AND SEAL OF THE GUARANTOR _____
NAME OF BANK _____
ADDRESS _____
DATE _____

BANK GUARANTEE FOR ADVANCE PAYMENT

To: _____(name of the Employer)
_____(address of the Employer)
_____(name of the Contract)

Gentlemen:

In accordance with the provisions of the Conditions of Contract, Article IV sub-clause 2 ("Advance Payment") of the above mentioned Contract, _____ *[name and Address of Contractor]* (hereinafter called "the Contractor") shall deposit with the_____(name of Employer), a bank guarantee to guarantee his proper and faithful performance under the said Clause of the Contract in an amount of _____ *[amount of Guarantee]* _____ *[in words]*.

We, the _____ *[bank or financial institution]*, as instructed by the Contractor, agree unconditionally and irrevocably to guarantee as primary obligator and not as Surety merely, the payment to_____(name of Employer), on his first demand without whatsoever right of objection on our part and without his first claim to the Contractor, in the amount not exceeding _____ [amount of Guarantee] _____ *[in words]*.

We further agree that no change or addition to or other modification of the terms of the Contract or of Works to be performed thereunder or of any of the Contract documents which may be made between, _____(name of Employer), and the Contractor, shall in any way release us from any liability under this guarantee, and we hereby waive notice of any such change, addition or modification.

This guarantee shall remain valid and in full effect from the date of the advance payment under the Contract until_____(name of Employer), receives full repayment of the same amount from the Contractor.

Yours truly : _____
SIGNATURE AND SEAL : _____
Name of Bank/ Financial Institution : _____
Address : _____
Date : _____

SECTION 8

SCHEDULE OF SUPPLEMENTARY INFORMATION

ANNEX C

SCHEDULE OF GUARANTEED TECHNICAL PARTICULARS (GTPs)

The Bidder shall fill up the Schedules for Guaranteed Technical Particulars (GTPs) for all items under each Schedule. The GTPs should also be provided in the prescribed formats in SOFT COPY also.

1. GTP OF GALVANISED STEEL TOWERS(GENERAL)			Bidder	
			Item No.	
Name and country of tower fabricator			1	
			2 (if any)	
Location of tower fabricating plants			1	
			2 (if any)	
Location of tower test facility				
Description		Applicable Standard		Make and country of origins
		Structural steel	High strength structural steel	
MATERIAL	Rolled shapes			
	Plates			
	Connection bolts & nuts			
	Lock nuts			
	U-bolts or shackles			
	Step bolts & nuts			
	Ladders			
	Spring washers			
GALVANISING	TOWER	Standard		
		Weight of zinc coating g/m^2	Thickness 6 mm and below	Thickness over 6 mm
			average…..minimum……	average…..minimum.
	BOLTS ,NUTS AND LOCK NUT	Standard		
		Weight of zinc coating g/m^2	average…..minimum……	average…..minimum.
		Method of coating for bolt	☐ hot-dipped ☐ other (state)……	
		Method of coating for nuts and lock nuts	☐ hot-dipped ☐ other (state)……	
		Retapping of nuts after galvanized	☐ yes ☐ no	
		Standard		

	SPRING WASHERS	Method of coating	☐ hot-dipped ☐ other (state)……	
		Weight of zinc coating g/m^2	Thickness≤4.76 mm	4.76mm≤thickness≤6.35mm
			average…..minimum……	average…..minimum.
D E SI G N	DESIGN METHOD	☐ Three –dimensional indeterminate method : Computer program …….. Developed by ……. ☐ Other method : …….		

	Bidder

1. GTP OF GALVANISED STEEL TOWERS (TOWER WEIGHT) **2. Indicate 66, 132 or 220kV :** **3. Indicate Single or Double Circuit Towers**	Item No.

TOWER TYPE	WEIGHTS IN KILOGRAMS												
	BASIC BODY	BODY EXTENSION					SINGLE LEG EXTENSION						
		3m	6m	9m	12m	15m	1.5m	3.0m	4.5m	6.0m			
B													
C													
D													
SP													
SB													
SC													
SD													
SSP													
TOTAL ESTIMATED WEIGHT TO BE SUPPLIED FOR THIS PROJECT													

Complete tower = Basic Body + Body Extension (if required) + 4 Leg Extensions (if required)
THIS SCHEDULE IS NOT APPLICABLE, WHERE THE TOWER DESIGN IS NOT IN BIDDER'S SCOPE.

	Bidder

2.GTP OF OVERHEAD CONDUCTOR		Item No.	
Make and Country of origin			
STRANDED WIRE	**Conductor Code Name**		
	Sectional area	Nominal mm^2	Calculated mm^2
	Steel strand	Number	Diam.mm
	Minimum breaking strength	Kg	
	Outside diameter	Mm	
	Standard weight	kg/km	
	Modulus of elasticity	Initial kg/mm^2	Final Kg/mm^2
	Coefficient of linear expansion	per ^{o} C	
	Lay ration and directed of lay		
COMPONENT WIRE	Diameter and tolerance	Mm	
	Ultimate tensile strength, average	kg/mm^2	
	Elongation in 610 mm	%	
	Galvanizing weight of zinc coating		
DRUM DETAILS	Reel designation		
	Reel capacity	m^3	
	Flange diameter	Mm	
	Drum diameter	Mm	
	Reel width	Inside mm	Outside Mm
	Arbor hole diameter	Mm	
	Thickness of lagging wood	Mm	
	Steel hub thickness	Mm	
	Steel strab width and thickness	mm x mm	
	Number and size of flange fixing bolts		
	Kind of wood and reservation	Kind of wood	Preservation
	Length per reel and tolerance	M	
	Weight of each reel and tolerance	Net Kg	Gross Kg

3.GTP OF OPTICAL GROUNDWIRE(OPGW)		Bidder Item No.	
Make and Country of origin			
OPGW	Standard according to which cable is manufactured		
	Method of manufacturing		
	Standard weight	kg/km	
	Minimum bending radius		
	No. of strands and diameter of individual strands		
	Conductor's Ultimate tensile stress	kg/mm^2	
	Conductor's Maximum tensile stress	kg/mm^2	
	Conductor's Everyday tensile stress at 32 °C	kg/mm^2	
	Maximum short time current rating	(kA for 1sec)	
	Ambient temperature rang		
	Fibre loss	(dB/km)	
	Splice loss	(dB)	
	Repair splice loss	(dB)	
	Cable attenuation end to end - 34.6 km	(dB)	
	Maximum fibre attenuation per km. at 1300 nm for temperature range 0°C to 60°C		
	Theoretical System loss for 1300 nm	(dB)	
	Optical fibre material		
	Cladding material		
	Diameter of fibre core	(mm)	
	Mode field diameter	(mm)	
	Coating material		
	Maximum dispersion per km.	(ps/nm/km)	
	Maximum numerical aperture at 1300 nm Bandwidth of optical fibre		
	Details of buffer fitting compound		
	Details of Tensile Strength Reinforcing		
	Core identification scheme and length marking		
DRUM DETAILS	Reel designation		
	Reel capacity	m^3	
	Flange diameter	Mm	
	Drum diameter	Mm	
	Reel width	Inside mm	Outside Mm
	Arbor hole diameter	Mm	
	Thickness of lagging wood	Mm	
	Steel hub thickness	Mm	

	Steel strab width and thickness	mm x mm	
	Number and size of flange fixing bolts		
	Kind of wood and reservation	Kind of wood	Preservation
	Length per reel and tolerance	M	
	Weight of each reel and tolerance	Net Kg	Gross Kg

	Bidder

4. **GTP OF INSULTATOR DISC**			Item No.	
Make and country of origin				
Type of insulator ☐ Porcelain ☐ Glass Ball and socket			ANSI class	ANSI class
Ref. Drawing No. and/or Catalog No.				
Disc outside diameter and tolerance		mm		
Unit spacing		mm		
Surface area of insulator	Top	cm^2		
	Bottom	cm^2		
Coupling type				
Leakage distance		mm		
Projected area		cm^2		
Combined mechanical and electrical strength		min.kg		
Mechanical impact strength		min m kg		
Tension proof test load		min.kg		
Time load		min.kg		
Low-frequency flashover voltage	Dry	kV		
	Wet	kV		
Critical impulse voltage	Positive	kV		
	Negative	kV		
Low-frequency puncture voltage		kV		
Low-frequency test voltage, rms to ground		kV		
Maximum RIV at 1,000 kHz		kV		
Steep front wave impulse	Positive	min.kV/ps		
	Negative	min.kV/ps		
Unit weight of disc		kg		
MATERIAL	Insulator shell			
	Cap and pin			
	Cotter key			
	Cement			
Galvanising weight of coating	Cap	$min.g/m^2$		
	Pin	$min.g/m^2$		
Glaze or insulator shell colour				
QUALITY CONFORMANCE	Combined mechanical and electrical test	X_L kg		
		S kg		
		X_L kV		

VAL UES	Puncture test	X kV		
		R kV		

5. **GTP OF INSULATOR STRINGS**		Bidder Item No.
S U	Make and country of origin	

SPENSIONINSULTAIONSTRING	Type of insulator strings		Single	By-pass	Double	V
	Ref. Drawing No. and/or Catalog No.					
	Working voltage	kV				
	Number of discs per string					
	Low-frequency flashover voltage	Dry kV				
		Wet kV				
	Critical impulse voltage (Positive wave)	kV				
	Arcing horn gap	mm				
	Breaking strength of complete set	kg				
	Weight of insulator set	kg				
TENSIONINSULATORSTRINGS	Make And country of origin					
	Type of insulator strings		Single	By-pass	Double	V
	Ref. Drawing No. and/or Catalog No.					
	Working voltage	kV				
	Number of discs per string					
	Low-frequency flashover voltage	Dry kV				
		Wet kV				
	Critical impulse voltage (Positive wave)	kV				
	Arcing horn gap	mm				
	Breaking strength of complete set	kg				
	Weight of insulator set	kg				
COUN	EQUIP	Make and country of origin				

TERWEIGHT	MENT	Type of counter weight	
		Ref. Drawing No. and/or Catalog No.	
		Overall height cm	
	COUNTERWEIGHT	Make and country of origin	
		Ref. Drawing No. and/or Catalog No.	
		Material	☐Galv. ☐ Concrete
			Cast Iron
		Diameter and thickness mmxmm	
		Weight per piece kg	

6.GTP OF VIBRATION DAMPER	Bidder	
	Item No.	Item No.
	Conductor	Earthwire (OPGW)
Maker and country of origin		
Ref. Drawing No. and/or Catalog No.		
Type of vibration damper		
Conductor diameter mm		
Total weight of each damper kg		
Diameter of weights mm		
Length of weights mm		

Weight of weights	kg		
Tolerance in weights	%		
Slip strength of steel messenger wire	kg		
Frequency response range of the damper	c/s		
Peak natural resonant frequency of the damper			
a) upper	c/s		
b) lower	c/s		
Free loop length	m		
at a) wind velocity	m/s		
b) tension in conductor	kg		
c) temperature	^{o}C		
Maximum safe bending amplitude peak to peak			
a) for the conductor	mil		
b) for vibration damper clamp	mil		
Maximum bending			
for the conductor with damper(s)	mil		

NUMBER AND LOCATION OF DAMPER(S)

1. **ACSR TWIN MOOSE Conductor(For 400kV lines)**

NUMBER AND LOCATION OF DAMPER(S) PER SPAN			
	Type of span		
	Suspension-Suspension	Suspension-Tension	Tension-Tension

Span (m)	No's	Location	No's	Location	No's	Location

2. **ACSR ZEBRA Conductor(For 220kV Lines)**

NUMBER AND LOCATION OF DAMPER(S) PER SPAN						
Span (m)	Type of span					
	Suspension-Suspension		Suspension-Tension		Tension-Tension	
	No's	Location	No's	Location	No's	Location

3. **ACSR PANTHER Conductor(For 132kV lines)**

NUMBER AND LOCATION OF DAMPER(S) PER SPAN	
	Type of span

Span (m)	Suspension-Suspension		Suspension-Tension		Tension-Tension	
	No's	Location	No's	Location	No's	Location

4. **ACSR WOLF Conductor(For 66kV lines)**

NUMBER AND LOCATION OF DAMPER(S) PER SPAN						
Span (m)	Type of span					
	Suspension-Suspension		Suspension-Tension		Tension-Tension	
	No's	Location	No's	Location	No's	Location

5. **OPTICAL GROUNDWIRE (OPGW)**

NUMBER AND LOCATION OF DAMPER(S) PER SPAN						
Span (m)	Type of span					
	Suspension-Suspension		Suspension-Tension		Tension-Tension	
	No's	Location	No's	Location	No's	Location

Notes :

1. Location is to specify the suspension end or the tension end of the span in which the vibration damper is installed.
2. The number of vibration dampers to be installed meet the requirement in the Specifications.

7.GTP OF EARTHING MATERIAL		Bidder
		Item No.
ST AN DA	Make and country of origin	

RD GR OU ND RO D	Nominal size and length	16mmx18m	19mmx18m	16mmx3.0m	19mmx3.0m
	Drawing No. and/or catalog No.				
	Material				
	Method of production	☐ Molten-welded ☐ Electro-deposited		☐ Molten-welded ☐ Electro-deposited	
	Thickness of coating and tolerance mm				
	Outside diameter and tolerance mm				
	Length and tolerance mm				
SE CTI ON AL GR OU ND RO D	Make and country of origin				
	Nominal size and length	16mmx18m	19mmx18m	16mmx3.0m	19mmx3.0m
	Drawing No. and/or catalog No.				
	Material				
	Method of production	☐ Molten-welded ☐ Electro-deposited		☐ Molten-welded ☐ Electro-deposited	
	Thickness of coating and tolerance mm				
	Outside diameter and tolerance mm				

	Length and tolerance mm					
	Drawing No. and/or Catalog No.of coupling					
	Weight per piece					
GROUND ROD CLAMP	Make And country of origin					
	Drawing No. and/or Catalog No.					
	Type of clamp					
	Material	Clamp				
		U-bolt and nut				
GROUND CONNECTOR	Make And country of origin					
	Drawing No. and/or Catalog No.					
	Type of connector					
	Material	Connector body				
		Bolt and nut				
GROUND CONNECTRING AND COUNTERPOISE	STRANDED WIRE	Make and country of origin				
		Nominal size and stranding				
		Material				
		Conductivity %IACS				
		Length per reel and tolerance m				
		Weight per reel and tolerance kg				
	SOLID WIRE	Make and country of origin				
		Nominal size and stranding				
		Material				
		Conductivity %IACS				
		Length per reel and tolerance m				
		Weight per reel and tolerance kg				

GROUND ROD DRIVING EQUIPMENT	Make and country of origin	
	Drawing No. and/or Catalog No.	

DEVIATIONS FROM AND EXCEPTION TO BID DOCUMENT

The Bidder shall specify below, in detail, all deviations from and exceptions to the Bid Document. Any entry shall be referenced to the Bid Document Clause No. to which they refer.

The Bidder shall be deemed to be compliant with the content and intent of the Bid Document except in respect of deviations and exceptions listed in this Schedule.

No deviation from and exception to the Bid Document shall be made subsequently to the Contract without the written approval of the Employer.

Clause No.	Details of Deviation/Exception	Reasons for Deviation/Exception

Declaration: This page and attached ……. Pages of deviations from the Bid Document is a complete record of such deviations.

In case NO DEVIATION is mentioned here and deviation of clauses/specification is mentioned else where, then it will be taken as a deviation.

Signature of Bidder: ……

Place & Date ……

SECTION 8 - SCHEDULES OF SUPPLEMENTARY INFORMATION

TABLE OF SCHEDULES

SCHEDULE 8-1 - TENDER INFORMATION

Schedule 8-1-1 - Addendum Receipt
Schedule 8-1-2 - Deviations from and Exceptions to Tender Document
Schedule 8-1-3 - Proposed Subcontractors
Schedule 8-1-4 - Contractor's Key Personnel
Schedule 8-1-5 - Site Establishment

SCHEDULE 8-2 - NAME AND PLACE OF MANUFACTURE TESTING AND INSPECTION

SCHEDULE 8-3 - TENDERER'S EXPERIENCE

SCHEDULE 8-4 - QUALIFICATION REQUIREMENT OF TENDERER'S EXPERIENCE

SCHEDULE 8-5 - STATUS OF CONTRACTS IN PROGRESS

SCHEDULE 8-6 - FINANCIAL STATUS OF TENDERER

SCHEDULE 8-7 - STANDARDS

SCHEDULE 8-8 - WORK SCHEDULE

SCHEDULE 8-9 - SCHEDULE OF PLANT & MACHINERY AVAILABLE

SCHEDULE 8-10 – CURRENT/PENDING LITIGATION

Schedule: 8-1-1

ADDENDUM RECEIPT

Tenderers shall acknowledge receipt of each addendum by listing hereunder each Addendum received.

Receipt of the following addenda is acknowledged.

Addendum numbered _____ dated _____
_____dated _____
_____dated _____
_____dated _____
_____dated_____
_____dated_____

Place:

Date:

Signature of Bidder:

Name of the Bidder:

Seal of the Company:

Schedule -8-1-2

(TO BE FILLED IN AND SIGNED BY THE TENDERER)

SCHEDULE OF DEVIATION

We/I have carefully gone through the Technical Specification and General Conditions of contract and have satisfied ourselves/myself and hereby conform that our / my offer strictly conforms to the requirements of the Technical Specification and General Conditions of contract except for the deviations which are given below:

Section	Chapter	Clause No.	Page No.	Statement of Deviation/Variation

Place:

Date:

Signature of Bidder:

Name of the Bidder:

Seal of the Company:

Schedule:8-1-3

PROPOSED SUBCONTRACTORS – Not Applicable

Tenderers shall be submitting a list of all Sub-Contractor's they propose to employ together with a brief description of the Plant of Works they propose to sublet based on the qualifying criteria as mentioned in this tender document.

Details of Equipment	Proposed Sub-Contractor

Place: **Signature of Bidder:**

Date: **Name of the Bidder:**

Seal of the Company:

Schedule :8-1-4

(TO BE FILLED IN AND SIGNED BY THE TENDERER)

SCHEDULE OF TECHNICAL PERSONNEL OF TENDERER

Sl No	Description	Name	Length of Service in firm	Qualification Status	Professional Experience and details of work carried out	Remarks

Place: **Signature of Bidder:**

Date: **Name of the Bidder:**

Seal of the Company:

Schedule:8-1-5

SITE ESTABLISHMENT

The Tenderer shall submit the estimated number and classification of all workmen and staff expected to be employed on site for erection and commissioning purposes.

This data shall be broken down into skilled and unskilled workmen by trade, erection engineers and technicians, administration project management, clerical and other staff, operating and commissioning engineers, technicians and others, for each month from commencement of operations.

Further, the Tenderer should indicate:

(a) Average working week	Hrs	
(b) Number of days worked per week	Days	
(c) Number of shifts per day		
(d) Number of hours per shift	hrs	

Place: **Signature of Bidder:**

Date: **Name of the Bidder:**

Seal of the Company:

Schedule 8-2

NAME AND PLACE OF MANUFACTURE, TESTING AND INSPECTION

Tenderers shall complete the following for each item or group of items to be supplied under the Contract.

Item/Group of Items	Name of Manufacturer and Place of Manufacture (Town/City, Country)	Place of Testing and Inspection (Town/City, Country)

Place: **Signature of Bidder:**

Date: **Name of the Bidder:**

Seal of the Company:

Schedule-8.3

TENDERER'S EXPEREINCE

Tenderers shall state below the relevant project experience in the supply and maintenance and that of their sub-contractors of items or group of items to be supplied under the Contract.

Item/Group of Items	Details of Tenderer's Experience	Details of Sub-Contractor's Experience

Place: **Signature of Bidder:**

Date: **Name of the Bidder:**

Seal of the Company:

Schedule-8.4

QUALIFICATION REQUIREMENT OF TENDERER'S EXPERIENCE

The Tenderer shall furnish the above information for such works/supplies in accordance with the Technical Specifications (Qualification Requirements & DBS).The information in respect of Joint Venture Partner, if any, shall also be furnished. Supporting documents shall be enclosed in respect of a minimum quantum of works as per Qualification Criteria given in Section 1 of this tender document.

A. DETAILS OF PROJECTS (OF SIMILAR NATURE & COMPLEXITY OF SUBJECT PROJECT)

Sl. No.	Name & Address of Client	Name of Line	No. of Circuits	Voltage Class	Length of Line		Scope of Work	Contract Duration	
					In Hilly terrain	In Plain terrain		Commencement	Completion
A	Lead Partner								
B.	JV Partner								

Place: **Signature of Bidder:**

Date: **Name of the Bidder:**

Seal of the Company:

B. DETAILS OF LINES MEETING THE ERECTION EXPERIENCE CRITERION AT Clause 4.5(a) (i) of SECTION-1

Sl. No.	Name & Address of Client	Name of Line	No. of Circuits	Voltage Class (66kV or higher)	Length of Line		Scope of Work	Date of Commissioning	whether in operation as on date of bid opening
					In Hilly terrain	In Plain terrain			
							Survey: **Yes / No** Optimisation of Locations: **Yes / No** Foundations: **Yes / No** Erection: **Yes / No** Stringing: **Yes / No**		
							Survey: **Yes / No** Optimisation of Locations: **Yes / No** Foundations: **Yes / No** Erection: **Yes / No** Stringing: **Yes / No**		
Total length of lines executed in hilly terrain									

Place: **Signature of Bidder:**

Date: **Name of the Bidder:**

Seal of the Company:

C. DETAILS OF SUPPLIES OF TRANSMISSION LINE TOWERS:

Details of Lines to which the tower parts have been supplied:

S. No.	Name & Address of Client	Name of the line	Supply of Tower		Date of commencement of supplies	Date of completion of supplies	Date of commissioning of Line	whether in operation as on date of bid opening
			Nos.	Weight (MT)				

Place: **Signature of Bidder:**

Date: **Name of the Bidder:**

Seal of the Company:

Schedule-8.5

STATUS OF CONTRACTS IN PROGRESS

Give full information of all the uncompleted works on the Contracts now in Progress/in Hand.

Name of the Project	Country	Owner/ Client	Contract Amount (Currency)	Amount Completed (Currency)	Date of Commencement	Schedule date of completion
TOTAL						

Place: **Signature of Bidder:**

Date: **Name of the Bidder:**

Seal of the Company:

Schedule-8.6

FINANCIAL STATUS OF TENDERER

Fill in the blanks for the last five (5) years in the original currency and also attach copies of the Balance Sheets for these years.

1.	Share Capital.	_____
2.	Total current assets	_____
2.1	Total cash and deposit	_____
2.2	Deposits with bids or otherwise as guarantees (due within 90 days)	_____
2.3	Accounts receivable from completed contracts (due within 90 days)	_____
2.4	Amounts receivable after deducting retention from uncompleted contracts (due within 90 days)	_____
2.5	Stocks and bonds at present market value	_____
2.6	Buildings and loans at present market value	_____
2.7	Life insurance at cash surrender value (for an individual or partnership only)	_____
2.8	Other current assets	_____
3.	Total current liabilities	
3.1	Notes payable (to banks, regular and for certified checks and to others)	_____
3.2	Accounts payable	_____
3.3	Other current liabilities	_____
4.	Total assets	_____
5.	Total Liabilities	_____
6	Current credit resources	_____
7.	Net worth	_____
8.	Total profit before tax	_____
9.	Turnover in the previous five financial years	Year 1_____

Year 2_____

Year 3 _____

Year 4 _____

Year 5 _____

10. Amount of balance _____

11. Date of balance _____

12. Bank references and address _____

13. Bonding capacity List names of institutions and bondable amounts: attach respective letters from surities

Institution	Currency
_____	_____
_____	_____
_____	_____
_____	_____

Remarks

Item 1: The amount for share capital shall include retained earnings.

Item 6: The maximum current credit resources the Tenderer's bank(s) hold(s) available for the fulfillment of Tenderer's obligation for the Project if the Tenderer is awarded the contract shall be stated and certified by the Bank.

Item 13: Attach respective letters from the banks.

Place : **Signature of Bidder:**

Date : **Name of the Bidder :**

Seal of the Company :

FORMAT FOR EVIDENCE OF ACCESS TO OR AVAILABILITY OF CREDIT/FACILITIES

BANK CERTIFICATE

To Date: …/…/…

……..
……..

This is to certify that M/s…… (hereinafter referred to as Bidder), who are participating in the tender for Bhutan Power Corporation Limited (BPC) for Tender No……., is our customer for the past ……. years.

Their financial transaction with our Bank has been satisfactory. They enjoy the following fund-based credit facilities with us against which the extent of utilization as on date is indicated below.

Sl no	**Type of Facility**	**Sanctioned limit as on Date (…/…./…)**	**Utilization as on Date (…/…/…)**	**Balance as on Date (…/…/…)**
1	**Fund Based**			
	(a)……			
	(b)…….			
2	**Total Amount**			

We further undertake that in the event of award of the Contract for the above tender to the Bidder, we shall provide credit facilities to the extent of …….. (Mention amount to meet the construction cash flow requirement) towards the above project specifically, to tide over any shortage of cash flow during the execution of the Contract.

Name of Bank :
Name of Authorized signatory :
Designation :
Phone no :
Address :

SEAL OF THE BANK

SCHEDULE-8.7

STANDARDS

Standards Used by the Tenderer

If for any major reason the Tenderer wishes to supply equipment to Standards other than those referred to in the Specification, especially in respect of detailed or dimensional standards, these shall be listed below, along with any standards used by the Tenderer which have not been referred to in the Specification.

Standard No. and Year	**Title**	**Deviations Yes/No standard specified**	**Equivalence Yes/No/Partial**

Place: **Signature of Bidder:**

Date: **Name of the Bidder:**

Seal of the Company:

Schedule-8-8

WORK SCHEDULE

The bidder shall provide a detailed programme covering design, manufacture, installation and commissioning phases of the project. This programme shall conform to the key dates in the Tender Document.

The programme shall include a bar chart of the principal quantities of work forecast for execution monthly, and payments expected to be made in connection herewith in accordance with the Conditions of Contract.

The programme shall be made using Project Management software like Microsoft Project. The Bidder shall also submit a soft copy of the programme to the Engineer/ Purchaser for approval.

The bidder should also include a schedule of all major items of plant and identify the Country of Origin.

Place: **Signature of Bidder:**

Date: **Name of the Bidder:**

Seal of the Company:

Schedule-8-9

(TO BE FILLED IN AND SIGNED BY THE TENDERER)

SCHEDULE OF PLANT & MACHINERY AVAILABLE

Sl No	Description of plant /machinery	No.	Make	Age & condition	Location where installed	Remarks

Place: **Signature of Bidder:**

Date: **Name of the Bidder:**

Seal of the Company:

Schedule-8-10

CURRENT/PENDING LITIGATION (in accordance with Section-I, clause 4.1.d. vii)

Nature of Dispute	Matter in Dispute	Year of Dispute
Arbitration cases pending		
Disputed incomplete works		
Pending civil cases against the firm and/or its Proprietor / Partner (s) involving moral turpitude in relation to business dealings.		
Pending criminal cases against the firm and/or its Proprietor /Partner(s) involving moral turpitude in relation to business dealings.		
Punishments received under civil cases and/or criminal cases involving moral turpitude in relation to business dealings to the firm and/or its Proprietor/ Partner(s)		

Place: **Signature of Bidder:**

Date: **Name of the Bidder:**

Seal of the Company:

SECTION 9

PREAMBLE TO PRICE SCHEDULE

PRICE SCHEDULES / BOQ

SCHEDULE OF PRICES

Preamble:

1. The Contract is of item rate turnkey in nature and includes the definitive engineering and design that shall ultimately define actual quantities of work.

2. The provisional quantities of various items of work like supply, erection, testing and commissioning of electrical equipment; and miscellaneous work items for the proposed substation are given in the price schedule. However, the quantities may vary consequent to actual execution of the work. The payment shall be made for the actual quantities used for various items. Items with quantity 'LOT' will not be eligible for any variation in payment irrespective of the quantities of the constituent sub-items.

3. The Contract Price shall be adjusted for the actual and correct quantities as executed and duly approved by the Employer on the basis of the proposed all-inclusive unit rates to arrive at the final Contract Price. It should be noted that the item description should be read in aggregation with the technical specifications.

4. Wherever no quantity is given against any item in the Schedule of prices, a rate shall nevertheless be entered against that item. This rate shall be used, in case the item is required to be used during actual execution of the contract.

5. The prices shall be firm during entire execution of the Contract and no price adjustment will be applicable even due to force majeure situations.

6. It shall be a condition of this contract that the all-inclusive rates quoted in Schedule of Rates / Prices shall not be varied for reasons of change in respective quantities.

7. Further, it shall also be an important condition of this contract that there shall not be any change in Unit Rates of items consequent to revision of labour rates by the Royal Government of Bhutan.

8. The supply rate against each item shall be all-inclusive FAS (Free-At-Site) basis till project site and shall be inclusive of engineering, manufacture, supply, freight, packing, transport to actual work site, insurance on transit, insurance of materials/ goods at site, storage wherever necessary, unloading at site, forwarding charges, etc. together with all risks, liabilities, contingencies and obligations imposed and implied by the Contractor. The Bidder shall indicate the all-inclusive rate separately for each item.

9. Bidder shall quote FAS (Free-At-Site) prices inclusive of BST and/or CD till project site. Bhutan Sales Tax (BST) and Customs Duty (CD) are applicable at the entry check point. The Contractor shall pay BST and/or CD and BPC shall reimburse the same as per actuals against submission of required documents for proof of payment at the entry point and in line with the contract terms and conditions.

10. All labour, supervision, inspection, erection/installation, testing and commissioning costs should be covered in Schedules for erection of substation equipment. The charges/ expenses to be incurred on testing and commissioning of the entire system as a whole shall be included in the prices for individual activities.

11. The total price for each activity should cover all costs and expenses required for supply, delivery, storage, erection, testing, commissioning and maintenance of works together with all risks, liabilities, contingencies, insurances and obligations imposed and implied by the Contractor.

12. Bidder shall enter prices in Schedule 3 for the supply of specified mandatory spares to site. These prices will be considered during bid evaluation. It shall not be binding on the Purchaser to procure all of these mandatory spares.

13. It shall be noted that such unit rates of constituent sub-items of “LOT” items in the price schedule are not meant for changing the “LOT” prices during actual execution and “LOT” price quoted by the bidder shall govern irrespective of quantity variation for the intended works. The rates of such sub-items can, however, be adopted for on-account payment purposes.

14. All items of work specified in the specifications have not been included in the price-schedule. The items of work not specifically called for in the Schedules are deemed to have been covered under the items called for, to leave the works complete, as per the specifications. The rate quoted by the Contractor shall be deemed to be all inclusive, to cover the smaller items specified / required but not included in the Price-Schedule. No price variation is applicable for this contract.

15. In addition to the points stipulated / highlighted in these clauses, all the conditions mentioned in the specifications, pertaining to measurement of quantities and unit rates of scheduled items shall apply.

16. It is deemed that the Bidder has understood the site conditions, environment, transport facilities, soil data etc. while preparing the price schedule and has adequately provided for them in his quoted prices. No claims of extra compensation will be payable for items and situations not foreseen and not incorporated by him in the schedules.

17. The wording under "Description" in the schedules is for subject matter guidance only. The Bidder's price shall include all works as specified in the specifications and drawings and all contractual obligations whether specifically mentioned or not.

18. The Bidder shall, if so desired by the Employer/ Engineer, furnish at any stage of the bidding or Contract execution, break-up of prices considered for any or all items covered in various activities, especially the LOT items.

19. Adjustment of Prices not in the schedule.

a) For Supply

If the rates contained in the Schedules are not directly applicable to the specific work in question, suitable rates shall be established by the Engineer reflecting the level of pricing in the Schedule of Prices.

Where the rates are not contained in the said Schedule, the amount shall be such as is in all the circumstances reasonable. Else the rates shall be derived based on joint observation of cost and the payment shall be made on the basis of quotation or the actual invoices from the manufacturer plus 20% (Twenty percent) towards Contractors overheads & profit, including taxes and deductions.

b) For Erection & Civil Works

"The determination of rates for the erection shall be based on the following":

i. Any item of the work, for which the unit rate is available in the contract (with or without specified quantity), shall be valued using the unit rate in the contract, irrespective of the quantity of the work.

ii. If any altered or substituted work includes any item/work for which no rate is specified in the contract, the rate for such item/work shall be derived from the rate available in the contract for similar items based on appropriate measures like weights, volume, etc. as applicable.

iii. If any altered or substituted work includes any item/work for which no rate is specified in the contract and the rate cannot be derived as indicated in (ii) above, then the rate of such item of work shall be worked out based on the rates available for such item in BSR 2024 (or latest BSR), if applicable in BSR 2024, the cost index on BSR 2024 being determined by the ratio of the value of the contract price for similar works (using the original estimated quantities in the contract) to the value of these similar works of the contract with BSR 2024 rates.

iv. For deriving rate of those items, which do not exist in BSR 2024 (or latest BSR) or in the contract cannot be derived as indicated above, "similar class of work" shall be interpreted as items having similar procedure of working. The rates shall be derived by adding/deducting the additional/reduction material/labour components involved in the BSR 2024 and worked out as per the procedure provided in (iii) above.

v. If the items altered/substituted works do not fall under all the above categories, the rates shall be fixed by the Engineer, on the basis of the other rates in the contract with proper rate analysis and/or using any other reasonable means. This shall be based on the joint observation of the cost for the actual payment made for such works plus 20% overhead and profit.

PROJECT : 66 KV D/C SEMTOKHA-DECHENCHOLING TRANSMISSSION LINE

SL.NO.:	SCHEDULE	COST (Nu.)
1	SUPPLY OF MATERIALS	
2	ERECTION, TESTING & COMMISSIONING	
TOTAL		

Item No.	Description	Unit	Provisional Quantity	Unit Rate for Supply and Delivery per Finish Tower			Total FAS Price (excluding	Provision for GST/CD			Total FAS Price in NU. (Including GST/CD)
				Ex-Work Price	FAS (excluding GST/CD)	FAS (including GST/CD)		GST %	CD%	Value(GST+CD) in NU.	
			1.00	**2.00**	**3.00**	**4=3+(6+7)x2**	**5=1x3**	**6.00**	**7.00**	**8=(6+7)x1x2**	**9=1x4**
1.0	**Supply of Tower Materials**										
1.1	Fabrication, galvanisation and supply & delivery of various types of towers, & its body extensions (complete), stub setting templates complete, excluding stubs and bolts & nuts but including hangers, D-shackles, pack washer etc. (payment shall be released for identified MT for complete tower)										
i)	HT Steel	MT	0.00								
ii)	Mild Steel	MT	188.23								
1.2	Fabrication, galvanisation & supply & delivery of stubs for various types of towers with pack washers excluding supply of bolts & nuts										
i)	HT Steel	MT	0.00								
ii)	Mild Steel	MT	16.63								
1.3	Fabrication, galvanisation, supply & delivery of Nuts & Bolts for towers except for stubs										
i)	Hexagonal Bolts & Nuts including Step Bolts	MT	9.93								
1.4	Fabrication, galvanisation, supply & delivery of Nuts & Hex. Bolts for stubs including plain washers										
i)	Hexagonal Bolts & Nuts including Plain Washers	MT	0.44								
2.0	**Supply of the following tower accessories**										
2.1	Danger Plate	Nos.	40.00								
2.2	Number Plate	Nos.	40.00								
2.3	Phase Plate (Set of three)	Set	40.00								
2.4	Aviation Requirements										
2.4.1	Span Markers	Nos.	5.00								
2.4.2	Aviation Signal/Obstruction Light (to be provided as per IS:5613)-Medium Intensity	Set	3.00								
2.5	Counterpoise Earthing as per specification										
2.5.1	120 mtr (30 x 4 legs)	Set	40.00								
2.5.2	280 mtr (70 x 4 legs)	Set	8.00								
2.6	Pipe Type Earthing (one of the Legs of each tower if required)	Set	5.00								
2.7	Circuit plate (Set of two)	Set	40.00								
3.0	**Design, Manufacturing, Supply of Conductor & Accessories**										
3.1	ACSR Wolf Conductor	Linear Km (*)	37.09								
3.2	Vibration Dampers for ACSR Conductor	No.	324.00								
3.3	ACSR Wolf equvalent ACCC conductor	Linear Km (*)	40.15								
3.4	Vibration Dampers for ACCC Conductor	No.	324.00								
4.0	**Design, Manufacturing, Supply & delivery of Insulators & Hardwares**										
4.1	**Suspension Insulator Strings Including Hardware Fittings, Arching Horns, etc,.. all complete**										
4.1.1	Suspension Pilot String Insulator assemblies (70kN-1X7)-ACSR	Set	11.00								
4.1.2	Suspension Pilot String Insulator assemblies (70kN-1X7)-ACCC	Set	10.00								
4.2	**Tension Insulator Strings Including Hardware Fittings, Arching Horns, etc,.. all complete**										
4.2.1	Single String Tension Insulators Assemblies (90kN-1X7)_ACSR	Set	204.00								
4.2.2	Single String Tension Insulators Assemblies (90kN-1X7)_ACCC	Set	204.00								
4.2.3	Double String Tension Insulators Assemblies (90kN-2X7)_ACSR	Set	42.00								
4.2.4	Double String Tension Insulators Assemblies (90kN-2X7)_ACCC	Set	42.00								

5.0	**Supply and Delivery of OPGW and Accessories**										
5.1.1	24 Core Non-Slotted Composite OPGW in three tubes as per specification	Linear Km (*)	12.36								
5.2	Jointing kits for OPGW/ In Splice enclosure for OPGW including downlead C-Clamp, earthing clamp, etc. Complete	Set	5.00								
5.3	OPGW Tension Assemblies (Dead End) with armour rod	Set	82.00								
5.4	Vibration Damper for OPGW	Nos.	648.00								
5.5	Bonding Connection for OPGW	Set	49.00								
6.0	**Mandatory Spare Parts**										
6.1	Fabrication, galvanisation and supply & delivery of 2 nos. of DD type towers with +9m body extensions (complete), stub setting templates complete, stubs and bolts & nuts including hangers, D-shackles, pack washer etc. (payment shall be released for identified MT for complete tower)										
6.1.1	HT Steel	MT	0.00								
6.1.2	Mild Steel	MT	20.94								
6.1.3	Hexagonal Bolts & Nuts including Step Bolts	MT	0.96								
6.1.4	Prop set (Set of two)	Set	1.00								
6.2	ACSR Wolf equivalent ACCC conductor	km	3.00								
6.3	Mid Span Joint for Wolf equivalent ACCC conductor	Nos.	5.00								
6.4	Repair Sleeve for ACSR Wolf equivalent ACCC conductor	Nos.	5.00								
6.5	Compression deadend of ACSR Wolf equivalent ACCC conductor including core retainer & socks wire mesh	Nos.	5.00								
7.0	**Stringing Equipments**										
7.1	60 Ton Press Head and Pump	Nos.	1.00								
7.2	Dies for Hydraulic Press compatible with ACSR Wolf equivalent ACCC conductor	Nos.	1.00								
7.3	Conductor Stripper with bushing compatible with ACSR Wolf equivalent ACCC conductor	Nos.	2.00								
7.4	Carbon Composite Core Cutter	Nos.	2.00								
8	**Electrical Equipment**										
8.1	POWER CABLES										
8.1.1	66 kV XLPE Cable										
8.1.1a	66 kV, 1C x 630 Sq.mm Al. conductor XLPE insulated cable from LA structure to Dead-end tower, excluding end termination kit but inclusive of all other accessories.	m	500.00								
8.2	CABLE TERMINATIONS KITS										
8.2.1	66 kV										
8.2.1a	66 kV Outdoor type cable termination kit suitable for 1C x 630 Sq.mm Al conductor XLPE insulate cable (XLPE to Air termination)for outgoing feeder, including bonding arrangement,all required accessories, etc. complete for termination at Dead-end tower and at LA structure.	No.	7.00								
8.3	Cabling System										
8.3.1	Steel Cable trays, 50x50x5 (angle), 30x5 mm (flat), 300 mm (width) to be fixed at the dead-end tower members and LA structures including clamps and cable tie for 66kV cable termination.	m	40.00								
8.4	Transmission Line Arrestor (TLA)										
8.4.1	66kV TLA										
8.4.1a	60kV (single phase) sutiable for installation on tower complete with base, terminal connectors, nuts, bolts, accessories, etc	No.	3.00								
										Total	

(*) Linear km is the horizontal distance measured between the conductor / OPGW attachment points of adjacent towers. The rate shall thus include allowances for unequal attachment heights, sag, scrap, creep or jumpers, OPGW splicing requirements including coiling and downleads etc. No additional amount will be paid for supply and erection of any mid-span joints / repair sleeves / repair armour rods etc., since these shall be avoided and if used, will be with explicit approval from Employer.

Item No.	Description	Unit	Provisional Quantity	Unit Rate (Nu.)	Total Price (Nu.)
		1	2	3	4 = 2 x 3
1	**Access, Clearing & Survey**				
1.1	Detailed Transmission Line survey including mobilization, preliminary survey to approval where asked, profiling, tower spotting, center pegging, check survey, line of sight clearing & tree cutting, submission of drawings etc for approval.	Linear km	12.36		
1.2	Check Survey for Transmission Line including mobilization, center pegging of lost pegs, profile survey to approval in case of need and where asked, tree cutting & RoW clearing, submission of drawings etc all as specified.	Linear km	12.36		
2	**Geotech Investigation**				
2.1	Excavation of trial pits at location including necessary shoring, dewatering, collecting samples, and conducting penetrometer test (if possible), backfilling, etc,… as per standard practice and to specifications.	No.	20.00		
2.2	Conducting electrical resistivity test as per standard practice and to specifications.	No.	40.00		
2.3	Conducting laboratory tests on selected soils, rocks and water samples including transporting the same to the approved laboratory test, as per standard practice and to specifications.	Lump Sum	1.00		
2.4	Preparation and submission of final report of geotechnical investigations both soft & hardcopy as detailed in specifications.	Lump Sum	1.00		
3	**Benching Works for Tower foundations, retaining walls, revetment walls, etc**				
3.1	In all types of Soil except Soft & Hard Rock	Cu.m	4,463.62		
3.2	In Soft/fissured Rock	Cu.m	2,603.78		
3.3	In Hard Rock	Cu.m	371.97		
4	**Tower/ Retaining wall/ Revetment wall Foundation works**				
4.1	Excavation & back filling in various type of soils including items like shoring, dewatering, etc all complete as per specification				
4.1.1	Normal Dry Soil	Cu.m	2,283.98		
4.1.2	Wet Soil	Cu.m	190.33		
4.1.3	Dry Fissured Rock	Cu.m	1,141.99		
4.1.4	Hard Rock	Cu.m	190.33		

4.2	Supply & Concreting (including all associated works related to foundation not covered in 4.1&4.3)				
4.2.1	M20 Concrete Nominal Mix 1:1.5:3	Cu.m	334.89		
4.2.2	M10 Lean Concrete Nominal Mix 1:3:6	Cu.m	49.78		
4.3	Supply & placement of reinforcement steel (Fe 500)	MT	50.30		
5	**Installation of Stubs including nuts and bolts**	MT	17.08		
6	**Erection of various type of towers, complete body with approved extensions / leg (equal / unequal) extensions (complete) including bolts & nuts, step bolts. Hangers, D shackes, etc including punching up to ACD**	MT	198.16		
7	**Installation of following tower accessories**				
7.1	Danger Plate	Nos.	40.00		
7.2	Number Plate	Nos.	40.00		
7.3	Phase Plate (Set of three)	Sets	40.00		
7.4	Aviation Requirements				
7.4.1	Span Markers	Nos.	5.00		
7.4.2	Aviation Signal/Obstruction Light (to be provided as per IS:5613)- Medium Intensity	sets	3.00		
7.5	Counterpoise Earthing as per specification				
7.5.1	120 mtr (30 x 4 legs)	Sets	40.00		
7.5.2	280 mtr (70 x 4 legs)	Sets	8.00		
7.6	Pipe Type Earthing (One of the leg of each tower if required)	Sets	5.00		
7.7	Circuit plate (Set of two)	Sets	40.00		
8	**Supply & Installation of following items for tower protection works**				
8.1	RRM in (1:5 Cement: Mortar) complete work including excavation & back filling with selected materials	Cu.m	422.22		
8.2	Gabion wall Stone bound in G.I mesh 4mm (8SWG) (including excavation & weaving of mesh)-3m Height	Cu.m	280.23		
8.3	M15 (1:2:4) nominal mix concrete for top seal cover of revetment including centering and shuttering	Cu.m	5.60		
8.4	Supply and concreting the PCC U-shape drain of 100 mm thick base, 100 mm thick side wall, 600 mm base width and overall depth of 450 mm in nominal mix of 1:2:4 concrete with 20 mm aggregate and 50 mm thick pad of concrete of 1:3:6 nominal mix with 40 mm aggregate including the earthwork in excavation, compaction of the base soil, backfilling with selected materials, disposall of surplus earth within 50 m lead, centering and shuttering, shoring, etc.., all complete	m	431.36		

8.5	Providing and Construction crib walls with timber section of 100 to 150 mm diameter including excavation in all types of soil and back filling as per the drawing. The rate shall include for excavation to foundation level,disposal of surplus excavated materials within all lead as per the site engineering, providing, laying timber sections as specified back filling with compaction, reinstatement of (road) surfaces works, bioengineering as well as all labour, equipment, tools and incidentals necessary to complete the works.	Sq.m	311.36		
9.1	**Stringing of Conductors and OPGW**				
9.1.1	Laying, stringing, tensioning, clamping, etc,… all complete of ACSR Wolf conductor & ACSR Wolf equivalent ACCC conductor including hoisting of insulators/strings, hardware fittings, dampers and all other accessories for all three phases of circuit 1 & 2 power conductors.	Linear km (*)	12.36		
9.1.2	Stringing of OPGW including fixing of OPGW Accessories, Jointing box and Hardware,etc,… all complete.	Linear km (*)	12.36		
9.1.3	Laying, re-stringing, tensioning, clamping, etc,… all complete of ACSR Wolf equivalent ACCC conductor including hoisting of insulators/strings, hardware fittings, dampers and all other accessories for all three phases of circuit 1 power conductors from LILO tower till Dechencholing substation.	Linear km (*)	1.02		
9.2	**De-Stringing of Conductor**				
9.2.1	De-stringing of the ACSR Wolf conductor including lowering of insulator strings, hardware fittings, arching horn, dampers, jumpers, etc all complete of all three phases of single circuit power conductor from LILO tower till Gantry of Dechencholing substation and transporting to the storeyard in Thimphu(Jamjee).	Linear km (*)	1.02		
10	**Cable Burial**				
10	Excavation, laying and burial of 3 phase XLPE power cable in a single-layer at a depth of 1.1 m and 0.7 m width, with 0.5 m thick sand bedding, & backfilling with selected excavated material, etc.. All complete	m	200.00		
11	**Electrical Works**				
11.1	POWER CABLES				
11.1.1	66 kV XLPE Cable				
11.1.1a	66 kV, 1C x 630 Sq.mm Al. conductor XLPE insulated cable from LA structure to Dead-end tower, excluding end termination kit but inclusive of all other accessories.	m	500.00		
11.1	CABLE TERMINATIONS KITS				

11.1.1	66 kV				
11.1.1a	66 kV Outdoor type cable termination kit suitable for 1C x 630 Sq.mm Al conductor XLPE insulate cable (XLPE to Air termination)for outgoing feeder, including bonding arrangement,all required accessories, etc. complete for termination at Dead-end tower and at LA structure.	Nos.	3.00		
11.3	Cabling System				
11.3.1	Steel Cable trays, 50x50x5 (angle), 30x5 mm (flat), 300 mm (width) to be fixed at the dead-end tower members and LA structures including clamps and cable tie for 66kV cable termination.	m	35.00		
11.4	Transmission Line Arrestor (TLA)				
11.4.1	66kV TLA				
11.4.1a	60kV (single phase) sutiable for installation on tower complete with base, terminal connectors, nuts, bolts, accessories, etc	Nos.	3.00		
				Total	
10	Occupational Health and Safety	Lump sum			
				Grand Total	

(*) Linear km is the horizontal distance measured between the conductor / OPGW attachment points of adjacent towers. The rate shall thus include allowances for unequal attachment heights, sag, scrap, creep or jumpers, OPGW splicing requirements including coiling and downleads etc. No additional amount will be paid for supply and erection of any mid-span joints / repair sleeves / repair armour rods etc., since these shall be avoided and if used, will be with explicit approval from Employer.